CONSTRUCTION PLANS FOR
RILEY CREEK CSO SATELLITE TREATMENT FACILITY
CONTRACT NO. 1
IEPA SRF LOAN #L17-4844
CITY OF MATTOON
MATTOON, ILLINOIS

MAY 2015

COMMON GROUND ALLIANCE
www.call811.com or
Phone: 811

Know what's **below.** **Call** before you dig.

THE LOCATION, SIZE AND TYPE OF MATERIAL OF EXISTING UNDERGROUND UTILITIES INDICATED ON THE PLANS IS NOT REPRESENTED AS BEING ACCURATE, SUFFICIENT OR COMPLETE. IT SHALL BE THE CONTRACTOR'S RESPONSIBILITY TO DETERMINE THE ACTUAL LOCATION OF ALL SUCH FACILITIES, INCLUDING SERVICE CONNECTIONS TO UNDERGROUND UTILITIES. PRIOR TO CONSTRUCTION, THE CONTRACTOR SHALL NOTIFY THE UTILITY COMPANIES OF HIS OPERATIONAL PLANS AND SHALL OBTAIN FROM THE RESPECTIVE UTILITY COMPANIES DETAILED INFORMATION AND ASSISTANCE RELATIVE TO THE LOCATION OF THEIR FACILITIES AND THE WORKING SCHEDULE OF THE COMPANIES FOR REMOVAL OR ADJUSTMENT WHERE REQUIRED. IN THE EVENT AN UNEXPECTED UTILITY INTERFERENCE IS ENCOUNTERED DURING CONSTRUCTION, THE CONTRACTOR SHALL IMMEDIATELY NOTIFY THE UTILITY COMPANY OF JURISDICTION. THE ENGINEER SHALL ALSO BE IMMEDIATELY NOTIFIED. ANY SUCH MAINS AND SERVICES SHALL BE RESTORED TO SERVICE AT ONCE AND PAID FOR BY THE CONTRACTOR AT NO ADDITIONAL COST TO THE CONTRACT.

CALL 911 IN THE EVENT IN WHICH DAMAGE RESULTS IN THE RELEASE OF NATURAL GAS.

UTILITY CONTACTS

NATURAL GAS: AMEREN	DAVE POTTLE	(217) 234-0429
ELECTRIC: AMEREN	QUINTON COMBS	(217) 234-0439
CABLE: MEDIACOM	DEL LINGAFELTER	(217) 348-5533
TELEPHONE: IL CONSOLIDATED TELEPHONE	WES CHAMBERS	(217) 235-3355
WATER, SEWER, STREETS: CITY OF MATTOON	DEAN BARBER	(217) 235-5460

SERVICE ADDRESS:
2521 NORTH 6th ST.
MATTOON, IL 61938

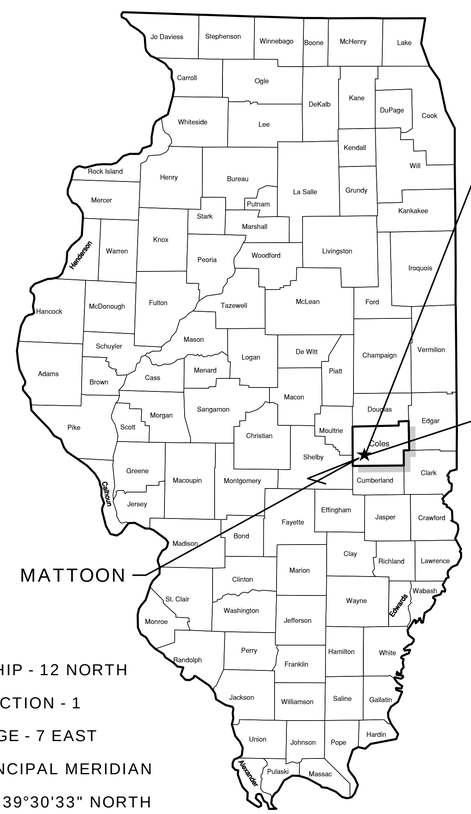

TOWNSHIP - 12 NORTH

SECTION - 1

RANGE - 7 EAST

THIRD PRINCIPAL MERIDIAN

LATITUDE: 39°30'33" NORTH

LONGITUDE: -88°21'35" WEST

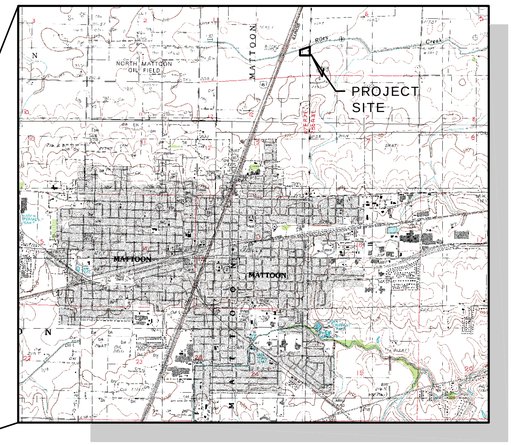

LOCATION MAP

CITY COUNCIL

MAYOR	TIM GOVER
COMMISSIONER	DAVE COX
COMMISSIONER	SANDRA GRAVEN
COMMISSIONER	RICK HALL
COMMISSIONER	J. PRESTON OWEN
CITY CLERK	SUSAN J. O'BRIEN
CITY ADMINISTRATOR	KYLE GILL
PUBLIC WORKS DIRECTOR	DEAN BARBER, P.E.
WWTP SUPERINTENDENT	GLENN SLOAN

05/18/2015
date
LICENSED PROFESSIONAL ENGINEER
TIMOTHY F. SUMNER
062-051267
STATE OF ILLINOIS
expires: 11-30-15
signature

5-18-15
date
LICENSED PROFESSIONAL ENGINEER
HENRY E. CRAMER
062-049776
STATE OF ILLINOIS
expires: 11-30-15
signature
P & M & FX SHEETS

5/18/2015
date
LICENSED PROFESSIONAL ENGINEER
SHANE C. REMMERT
062-060424
STATE OF ILLINOIS
expires: 11-30-15
signature
C SHEETS

5/18/15
date
LICENSED PROFESSIONAL ENGINEER
SHANNON J. BRADY
062-059084
STATE OF ILLINOIS
expires: 11-30-15
signature
DI & D SHEETS

05/18/2015
date
JEFF J. FICKBOHM
081-005245
LICENSED STRUCTURAL ENGINEER STATE OF ILLINOIS
SPRINGFIELD, ILLINOIS
expires: 11-30-16
signature
S SHEETS

5.18.2015
date
LICENSED PROFESSIONAL ENGINEER
LOUIS D. WELLER
062-054095
STATE OF ILLINOIS
expires: 11-30-15
signature
E SHEETS

5.18.2015
date
LICENSED ARCHITECT
GEORGE T. CAIN
001-016369
STATE OF ILLINOIS
expires: 11-30-16
signature
A SHEETS

CMT JOB NO.: 12078-03-00

CMT

License No. 184-000613

© CMT, Inc. 2014

PATH: J:\MATTOON\12078-03\DRAWSHEETS\1-CSO SATELLITE TREATMENT\120780300-G-001.DWG
PLOT DATE: Wednesday, June 17, 2015 2:49:36 PM

Path: J:\Mattoon\12078-03\Draw\Sheets\1-CSO Satellite Treatment\120780300-G-002.dwg
Date: Wednesday, June 17, 2015 11:36:03 AM

CMT

License No. 184-000613

CONSULTANTS

MAY 2015

CSO SATELLITE TREATMENT FACILITY CONTRACT NO. 1

OWNER

MATTOON

MATTOON, ILLINOIS: *Working Together to Build the Future*

CITY OF MATTOON

MATTOON, ILLINOIS

MARK	DATE	DESCRIPTION

PROJECT NO:	12078-03-00
CAD DWG FILE:	120780300-G-002.DWG
DESIGNED BY:	TFS
DRAWN BY:	DLB
CHECKED BY:	TFS
APPROVED BY:	TFS

COPYRIGHT: CRAWFORD, MURPHY & TILLY, INC. 2015

SHEET TITLE

CONSTRUCTION CONTRACT SUMMARY

G-002

INDEX TO SHEETS

SHEET NUMBER	DRAWING NUMBER	DRAWING TITLE
General		
1	G-001	COVER SHEET
2	G-002	CONSTRUCTION CONTRACT SUMMARY
3	G-003	INDEX TO SHEETS
4	G-004	GENERAL NOTES, SYMBOLS & LEGEND
5	G-201	HYDRAULIC PROFILE
6	G-601	PROCESS FLOW DIAGRAM
Civil		
7	C-001	GENERAL NOTES
8	C-101	EXISTING CONDITIONS PLAN
9	C-102	DEMOLITION PLAN
10	C-103	SITE PLAN
11	C-104	GRADING PLAN
12	C-105	SITE PIPING & UTILITY PLAN
13	C-106	EROSION & SEDIMENTATION CONTROL - PHASE 1
14	C-107	EROSION & SEDIMENTATION CONTROL - PHASE 2
15	C-201	SITE PIPING PROFILES - 1
16	C-202	SITE PIPING PROFILES - 2
17	C-301	EROSION CONTROL DETAILS
18	C-302	CONSTRUCTION DETAILS - 1
19	C-303	CONSTRUCTION DETAILS - 2
20	C-304	CONSTRUCTION DETAILS - 3
21	C-305	CONSTRUCTION DETAILS - 4
22	C-306	CONSTRUCTION DETAILS - 5
23	C-307	CONSTRUCTION DETAILS - 6
24	C-308	CONSTRUCTION DETAILS - 7
25	C-309	CONSTRUCTION DETAILS - 8
Structural		
26	S-001	GENERAL STRUCTURAL NOTES
27	S-002	BUILDING DESIGN DATA AND GENERAL DETAILS
28	S-111	SCREEN STRUCTURE WALL PLAN
29	S-112	SCREEN BUILDING ROOF FRAMING PLAN AND DETAILS
30	S-121	FIRST FLUSH TANK FOUNDATION PLAN
31	S-122	FIRST FLUSH TANK FOUNDATION PLAN DRILLED PIER OPTION
32	S-123	FIRST FLUSH TANK PLAN AND DETAILS
33	S-131	INFLUENT PUMP STATION WALL & TOP SLAB PLAN
34	S-141	SWIRL CONCENTRATOR BASE AND WALL PLAN
35	S-142	SWIRL CONCENTRATOR TOP PLAN & DETAILS
36	S-151	CHLORINE CONTACT TANK PLAN & SECTION
37	S-161	CHEMICAL FEED BUILDING FOUNDATION PLAN
38	S-162	CHEMICAL FEED BUILDING ROOF PLAN & DETAILS
39	S-171	BLOWER-ELECTRICAL BUILDING FOUNDATION PLAN
40	S-172	BLOWER-ELECTRICAL BUILDING FLOOR SLAB PLAN
41	S-173	BLOWER-ELECTRICAL BUILDING ROOF PLAN & DETAILS
42	S-181	FOUL SEWER-DRAIN PUMP STATION PLAN AND SECTION
43	S-311	SCREEN BUILDING SECTIONS
44	S-312	SCREEN BUILDING SECTIONS 2
45	S-321	FIRST FLUSH TANK MICROPILE OPTION DETAILS
46	S-322	FIRST FLUSH TANK DRILLED PIER OPTION DETAILS
47	S-323	FIRST FLUSH TANK SECTIONS AND DETAILS
48	S-331	INFLUENT PUMP STATION SECTIONS
49	S-332	INFLUENT PUMP STATION STAIR SECTIONS & DETAILS
50	S-341	SWIRL CONCENTRATOR SECTIONS & DETAILS
51	S-351	CHLORINE CONTACT TANK SECTIONS & DETAILS
52	S-361	CHEMICAL FEED BUILDING SECTIONS
53	S-362	CHEM FEED BUILDING LOADING DOCK SECTIONS & DETAILS
54	S-371	BLOWER-ELECTRICAL BUILDING SECTION & DETAILS

INDEX TO SHEETS

SHEET NUMBER	DRAWING NUMBER	DRAWING TITLE
Architectural		
55	A-001	ABBREVIATIONS AND PROJECT CRITERIA
56	A-002	ACCESSIBLE MOUNTING HEIGHTS SYMBOLS & NOTES
57	A-111	SCREEN BUILDING PLANS AND ELEVATIONS
58	A-112	SCREEN BUILDING - BUILDING SECTION & DETAILS
59	A-161	CHEMICAL FEED BUILDING PLANS
60	A-162	CHEMICAL FEED BUILDING ELEVATIONS
61	A-163	CHEMICAL FEED BUILDING SECTIONS AND DETAILS
62	A-164	CHEMICAL FEED BUILDING - WALL SECTIONS & DETAILS
63	A-171	BLOWER AND ELECTRICAL BUILDING PLANS
64	A-172	BLOWER & ELECTRICAL BUILDING ELEVATIONS
65	A-601	DOOR SCHEDULES & DETAILS
66	A-602	ROOM FINISH SCHEDULES & DETAILS
Fire Suppression		
67	FX-161	CHEMICAL FEED BUILDING PLAN & DETAILS
Plumbing		
68	P-001	PLUMBING ABBREVATIONS, LEGEND AND NOTES
69	P-161	CHEMICAL FEED BUILDING PLAN & DETAILS
70	P-171	BLOWER AND ELECTRICAL BUILDING PLANS & DETAILS
Process & Instrumentation Diagrams		
71	DI-001	PID - LEGEND AND GENERAL NOTES
72	DI-601	PID - SCREENINGS
73	DI-602	PID - FIRST FLUSH TANK
74	DI-603	PID- INFLUENT PUMP STATION AND SWIRL CONCENTRATOR
75	DI-604	PID - CHLORINE CONTACT TANK
76	DI-605	PID - CHLORINATION - SHEET 1
77	DI-606	PID - CHLORINATION - SHEET 2
78	DI-607	PID - CHLORINATION - SHEET 3
79	DI-608	PID - DECHLORINATION
80	DI-609	PID - PLANT WATER
81	DI-610	PID - BLOWERS
82	DI-611	PID - FOUL SEWER - DRAIN PUMP STATION
83	DI-612	PID - RILEY CREEK PUMP STATION
Process		
84	D-001	PROCESS GENERAL NOTES, LEGEND AND DETAILS
85	D-111	SCREEN STRUCTURE PLAN AND SECTION
86	D-121	FIRST FLUSH TANK PROCESS PLAN
87	D-131	INFLUENT PUMP STATION
88	D-141	SWIRL CONCENTRATOR PLAN
89	D-151	CHLORINE CONTACT TANK AND DETAILS
90	D-161	CHEMICAL FEED BUILDING
91	D-171	BLOWER AND ELECTRICAL BUILDING PLAN
92	D-181	FOUL SEWER-DRAIN PUMP STATION
93	D-311	SCREEN BUILDING SECTIONS AND DETAILS
94	D-321	FIRST FLUSH TANK SECTION AND DETAILS
95	D-351	CHLORINE CONTACT SECTIONS
96	D-501	GATE DETAILS
97	D-502	PIPE SUPPORT DETAILS
98	D-661	CHLORINE SYSTEM SCHEMATICS
Mechanical		
99	M-001	HVAC ABBREVIATIONS, LEGEND AND NOTES
100	M-111	SCREEN BUILDING HVAC PLAN AND DETAILS
101	M-161	CHEMICAL FEED BUILDING PLAN
102	M-171	BLOWER AND ELECTRICAL BUILDING PLAN

INDEX TO SHEETS

SHEET NUMBER	DRAWING NUMBER	DRAWING TITLE
Electrical		
103	E-001	STANDARD LEGEND AND ABBREVIATIONS
104	E-002	ELECTRICAL STANDARD DETAILS AND NOTES
105	E-003	ELECTRICAL STANDARD DETAILS AND NOTES
106	E-101	ELECTRICAL SITE PLAN
107	E-102	ELECTRICAL SITE PLAN EXTERIOR DUCT BANK SCHEDULE
108	E-103	ELECTRICAL SITE PLAN EXTERIOR DUCT BANK SCHEDULE
109	E-111	SCREEN BUILDING LIGHTING PLAN
110	E-112	SCREEN BUILDING POWER PLAN
111	E-121	FIRST FLUSH TANK PROCESS POWER PLAN
112	E-131	INFLUENT PUMP STATION POWER PLAN
113	E-151	CHLORINE CONTACT TANK POWER PLAN
114	E-161	CHEMICAL FEED BUILDING LIGHTING PLAN
115	E-162	CHEMICAL FEED BUILDING POWER PLAN
116	E-171	BLOWER AND ELECTRICAL BUILDING LIGHTING PLAN
117	E-172	BLOWER AND ELECTRICAL BUILDING POWER PLAN
118	E-181	FOUL SEWER-DRAIN PUMP STATION POWER PLAN
119	E-191	EXIST. RILEY CREEK P.S. & SCREENINGS ELECTRICAL
120	E-501	MAIN DISTRIBUTION PANEL AND MCC-1
121	E-601	EXISTING ELECTRICAL ONE-LINE DIAGRAM
122	E-602	PROPOSED ELECTRICAL ONE-LINE DIAGRAM
123	E-603	PANEL SCHEDULES
124	E-604	PANEL SCHEDULES
125	E-605	PLC NETWORK ARCHITECTURE
126	E-606	MISCELLANEOUS SCHEMTAICS - 1
127	E-607	MISCELLANEOUS SCHEMTAICS - 2
128	E-608	BAR SCREEN CONTROL SCHEMATIC

CMT

License No. 184-000613

CONSULTANTS

MAY 2015

CSO SATELLITE TREATMENT FACILITY CONTRACT NO. 1

OWNER

MATTOON

MATTOON, ILLINOIS: *Working Together to Build the Future*

CITY OF MATTOON

MATTOON, ILLINOIS

MARK	DATE	DESCRIPTION

PROJECT NO:	12078-03-00
CAD DWG FILE:	120780300-G-003.DWG
DESIGNED BY:	TFS
DRAWN BY:	DLB
CHECKED BY:	
APPROVED BY:	

COPYRIGHT: CRAWFORD, MURPHY & TILLY, INC. 2015

SHEET TITLE

INDEX TO SHEETS

G-003

SHEET 3 OF 128

Path: J:\Mattoon\12078-03\Draw\Sheets\1-CSO Satellite Treatment\120780300-G-003.dwg
Date: Wednesday, June 17, 2015 11:36:12 AM

GENERAL NOTES

1. UNLESS MODIFIED BY THE PROJECT SPECIFICATIONS, ALL ROAD WORK SHALL BE CONSTRUCTED IN ACCORDANCE WITH THE "STANDARD SPECIFICATIONS FOR ROAD AND BRIDGE CONSTRUCTION," ADOPTED BY THE ILLINOIS DEPARTMENT OF TRANSPORTATION ON JANUARY 1, 2012 AND THE SUPPLEMENTAL SPECIFICATIONS AND RECURRING SPECIAL PROVISIONS, ADOPTED JANUARY 1, 2015 FOR SANITARY SEWER AND STORM SEWER CONSTRUCTION, THE "STANDARD SPECIFICATIONS FOR WATER AND SEWER MAIN CONSTRUCTION IN ILLINOIS, SIXTH EDITION" ADOPTED JULY 2009, SHALL GOVERN, UNLESS MODIFIED BY THE PROJECT SPECIFICATIONS. FOR TURF RESTORATION WORK, THE "ILLINOIS URBAN MANUAL" ADOPTED BY IEPA IN 2012 SHALL GOVERN.

2. THE LOCATIONS, SIZE, MATERIAL, DESCRIPTION OR TYPE OF EXISTING UNDERGROUND UTILITIES INDICATED ON THE PLANS ARE NOT REPRESENTED AS BEING ACCURATE, SUFFICIENT OR COMPLETE.

   PRIOR TO THE START OF CONSTRUCTION, THE CONTRACTOR SHALL ARRANGE TO HAVE ALL UNDERGROUND UTILITIES INCLUDING WATER, GAS, ELECTRIC, STORM SEWER, TELEPHONE, FIBER OPTICS AND CABLE TV LOCATED AND SUITABLY MARKED. SHOULD A UTILITY BE IN CONFLICT WITH THE PROPOSED CONSTRUCTION, THE ENGINEER SHALL BE NOTIFIED AT ONCE. ARRANGEMENTS SHALL BE MADE FOR THE UTILITIES TO BE PROTECTED OR IF PROTECTION IS NOT FEASIBLE TO ARRANGE FOR THE UTILITY TO BE RELOCATED. WATER, GAS, ELECTRIC, TELEPHONE AND OTHER LINES SHALL BE PROTECTED AT NO ADDITIONAL EXPENSE TO THE OWNER AND WITHOUT CLAIM BY THE CONTRACTOR FOR DELAYS DUE TO SERVICE LINES ENCOUNTERED.

   THE UTILITIES OF THIS PROJECT CAN BE CONTACTED PRIOR TO CONSTRUCTION BY CALLING THE JOINT UTILITY INFORMATION FOR EXCAVATORS (JULIE). PHONE 811.

3. APPLICABLE STANDARD DETAILS AND SPECIAL PROJECT DETAILS ARE INCLUDED IN THE PROJECT SPECIFICATIONS.

4. THE CONTRACTOR SHALL TAKE REASONABLE PRECAUTIONS TO PROTECT PUBLIC AND PRIVATE PROPERTY. IF, AT ANY TIME, HE DAMAGES OR DESTROYS PUBLIC OR PRIVATE PROPERTY, THE CONTRACTOR SHALL, AT HIS OWN EXPENSE, RESTORE SUCH PROPERTY TO A CONDITION EQUAL TO THAT EXISTING BEFORE SUCH DAMAGE.

5. THE OWNER WILL PROCURE ALL CONSTRUCTION PERMITS. THE CONTRACTOR SHALL GIVE ALL NOTICES NECESSARY AND INCIDENTAL TO THE DUE AND LAWFUL PROSECUTION OF THE WORK.

6. THE VERTICAL DATUM USED FOR ELEVATIONS ON THESE PLANS IS THE UNITED STATES GEOLOGICAL SURVEY (USGS) - NAVD88.

7. THE HORIZONTAL DATUM USED FOR ELEVATIONS ON THESE PLANS IS UNITED STATES GEOLOGIC SURVEY - NAD 83.

8. THE CONTRACTOR IS RESPONSIBLE FOR ANY DAMAGE TO EXISTING STRUCTURE, ROADS AND FENCE BY THEIR OPERATIONS. ANY DAMAGE SHALL BE REPAIRED TO THEIR ORIGINAL CONDITION OR BETTER, AND THE REPAIR SHALL BE ACCEPTABLE TO THE VILLAGE ENGINEER.

9. THE PROPERTY ON WHICH THE EXISTING PUMPING STATION RESIDES IS OWNED BY THE CITY OF MATTOON. CONTRACTOR SHALL COORDINATE CONSTRUCTION ACTIVITIES WITH THE CITY OF MATTOON PUBLIC WORKS DEPARTMENT TO ENSURE CONTINUOUS ACCESS AND OPERATION.

10. PROJECT PLANS WERE DEVELOPED USING UNITED STATES NATIONAL CAD STANDARDS (NCS) VERSION 4.0, JANUARY 2008.

11. SHEET IDENTIFICATION IS COMPRISED OF A DISCIPLINE CODE, A HYPHEN, A TYPE CODE, A STRUCTURE CODE AND A SEQUENCE NUMBER. SEE BELOW FOR DISCIPLINES, TYPE AND STRUCTURE CODES.

DISCIPLINES CODES	TYPE CODES	STRUCTURE CODES
G - GENERAL	0 - GENERAL	1 - SCREEN STRUCTURE
C - CIVIL	1 - PLANS	2 - FIRST FLUSH TANK
S - STRUCTURAL	2 - ELEVATIONS	3 - INFLUENT PUMP STATION
A - ARCHITECTURAL	3 - SECTIONS	4 - SWIRL CONCENTRATOR
P - PLUMBING	4 - LARGE-SCALE VIEWS	5 - CHLORINE CONTACT TANK
DI - PROCESS & INSTRUMENTATION	5 - DETAILS	6 - CHEMICAL FEED BUILDING
D - PROCESS	6 - SCHEDULES AND DIAGRAMS	7 - BLOWER AND ELECTRICAL BUILDING
M - MECHANICAL	7 - USER DEFINED	8 - FOUL SEWER/DRAIN PUMP STATION
E - ELECTRICAL	8 - USER DEFINED	
	9 - 3D REPRESENTATIONS	

EXAMPLE: D-351

D	-	3	-	5	-	1
PROCESS		SECTIONS		CHLORINE CONTACT		SEQUENCE

CALLOUT SYMBOLS LEGEND

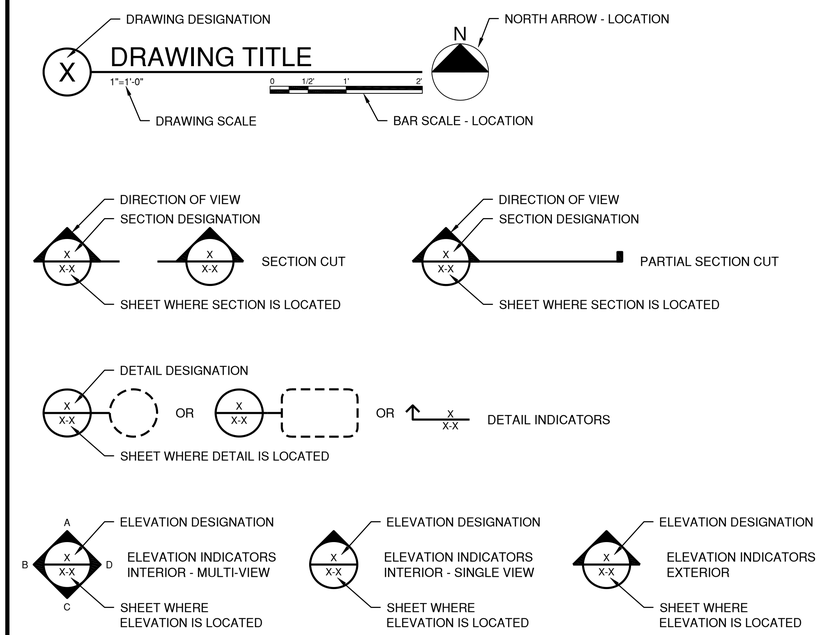

COORDINATE TABLE (NAD 83)

CONTROL POINT	DESCRIPTION	NORTHING	EASTING
CONTROL POINT #1	IRON PIN NORTH OF RILEY CREEK, WEST SIDE OF 6th STREET.	1035429.253	976850.98
CONTROL POINT #4	IRON PIN SOUTHEAST OF PUMP STATION PROPERTY, EAST SIDE OF 6th STREET.	1034983.011	976909.523

BENCHMARKS (NAVD 88)

1. BOLT IN SE WINGWALL OF BRIDGE OVER RILEY CREEK ON NORTH 6th STREET. ELEVATION 684.107 USGS.

2. SANITARY MANHOLE DUE EAST OF EXISTING SCREEN BUILDING, RIM ELEVATION 681.16 USGS.

CMT

License No. 184-000613

CONSULTANTS

MAY 2015

CSO SATELLITE TREATMENT FACILITY CONTRACT NO. 1

OWNER

MATTOON

MATTOON, ILLINOIS: *Working Together to Build the Future*

CITY OF MATTOON

MATTOON, ILLINOIS

MARK	DATE	DESCRIPTION

PROJECT NO:	12078-03-00
CAD DWG FILE:	120780300-G-004.DWG
DESIGNED BY:	TFS
DRAWN BY:	DLB
CHECKED BY:	TFS
APPROVED BY:	TFS

COPYRIGHT: CRAWFORD, MURPHY & TILLY, INC. 2015

SHEET TITLE

GENERAL NOTES, SYMBOLS & LEGEND

G-004

Path: J:\Mattoon\12078-03\Draw\Sheets\1-CSO Satellite Treatment\120780300-G-004.dwg
Date: Wednesday, June 17, 2015 11:36:24 AM

1.85 MG FIRST FLUSH FLOW TRAIN

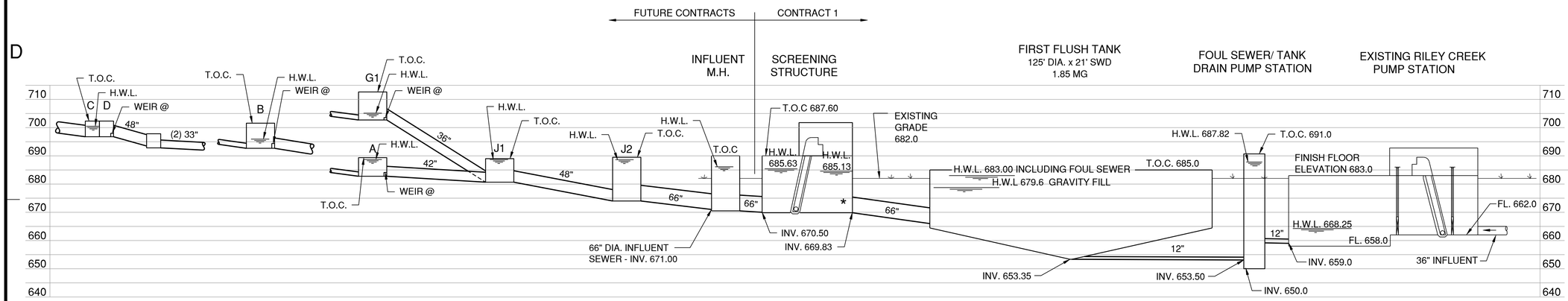

** FUTURE CONTRACT ELEVATIONS TO BE DETERMINED.

* OVERFLOW WEIR LOCATED AT THE DOWNSTREAM END AND THE UPSTREAM END OF THE SCREEN STRUCTURE
CREST IS 684.63
H.W.L. ABOVE WEIR IS 1' THEREFORE 685.63

15 MGD TREATMENT TRAIN

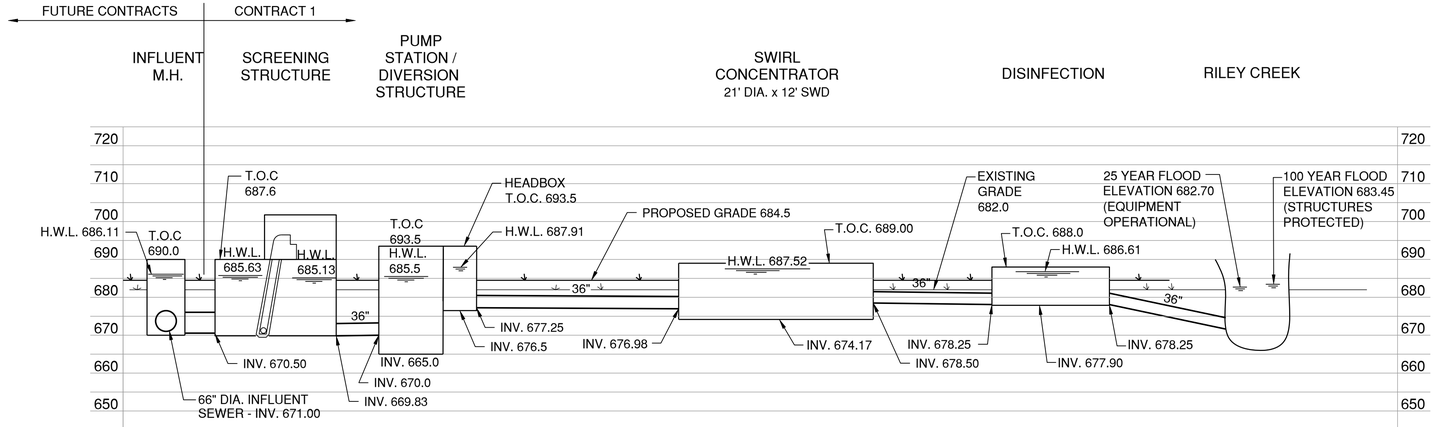

HYDRAULIC PROFILE AT LARGEST AVERAGE YEAR EVENT
1' OF ALLOWABLE HEAD OVER OVERFLOW WEIR AT SITE

SCALE: VERT. 1"=20'
HORIZ. NONE

CMT

License No. 184-000613

CONSULTANTS

MAY 2015

CSO SATELLITE TREATMENT FACILITY CONTRACT NO. 1

OWNER

MATTOON
MATTOON, ILLINOIS: *Working Together to Build the Future*

CITY OF MATTOON

MATTOON, ILLINOIS

MARK	DATE	DESCRIPTION

PROJECT NO:	12078-03-00
CAD DWG FILE:	120780300-G-201.DWG
DESIGNED BY:	SJB
DRAWN BY:	DLB
CHECKED BY:	
APPROVED BY:	

COPYRIGHT: CRAWFORD, MURPHY & TILLY, INC. 2015

SHEET TITLE

HYDRAULIC PROFILE

G-201

SHEET 5 OF 128

Path: J:\Mattoon\12078-03\Draw\Sheets\1-CSO Satellite Treatment\120780300-G-201.dwg
Date: Wednesday, June 17, 2015 11:36:32 AM

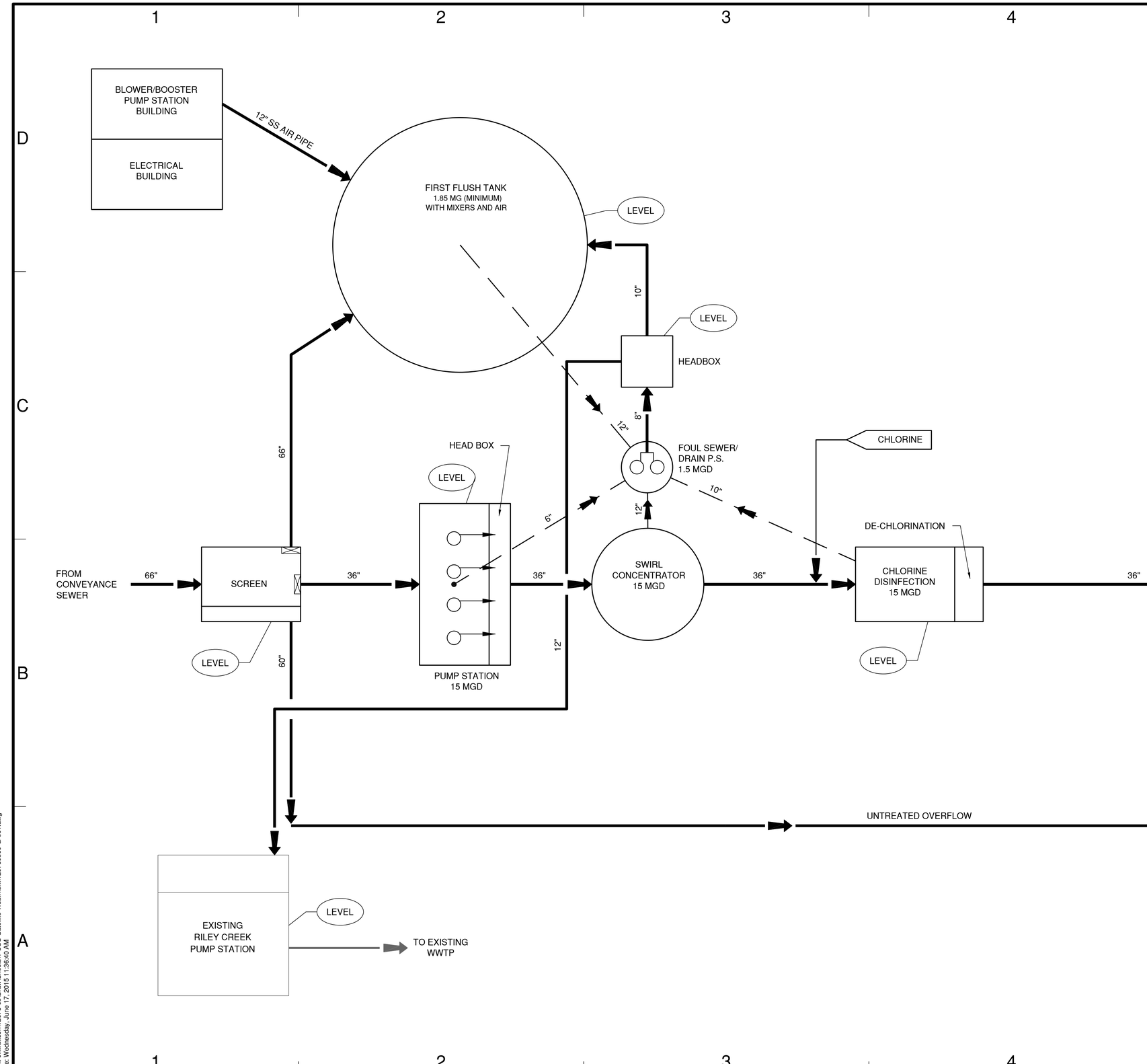

LEGEND

DESIGN Qp = 15 MGD (PRIMARY TREATMENT)

- LEVEL — INSTRUMENTATION AND CONTROLS
- PUMP
- GATE
- DRAIN LINE

CMT

License No. 184-000613

CONSULTANTS

MAY 2015

CSO SATELLITE
TREATMENT FACILITY
CONTRACT NO. 1

OWNER

MATTOON

MATTOON, ILLINOIS: *Working Together to Build the Future*

CITY OF MATTOON

MATTOON, ILLINOIS

MARK	DATE	DESCRIPTION

PROJECT NO:	12078-03-00
CAD DWG FILE:	120780300-G-601.DWG
DESIGNED BY:	TFS
DRAWN BY:	DLB
CHECKED BY:	TFS
APPROVED BY:	TFS

COPYRIGHT: CRAWFORD, MURPHY & TILLY, INC. 2015

SHEET TITLE

PROCESS FLOW DIAGRAM

G-601

SHEET 6 OF 128

Path: J:\Mattoon\12078-03\Draw\Sheets\1-CSO Satellite Treatment\120780300-G-601.dwg
Date: Wednesday, June 17, 2015 11:36:40 AM

GENERAL NOTES

1. ALL DIMENSIONS ARE TO THE EDGE OF PAVEMENT UNLESS OTHERWISE NOTED.
2. ALL WORK AND MATERIALS SHALL COMPLY WITH ALL STATE/CITY/COUNTY REGULATIONS/CODES AND O.S.H.A. STANDARDS.
3. CONTRACTOR SHALL COORDINATE AND COOPERATE WITH CONCURRENT WORK OF OTHER CONTRACTORS, IF APPLICABLE.
4. CONTRACTOR SHALL REFER TO THE ARCHITECTURAL AND/OR STRUCTURAL PLANS FOR EXACT LOCATIONS AND DIMENSIONS OF DOORS, DOOR STOOPS, TRUCK DOCKS, AND PRECISE STRUCTURE DIMENSIONS.
5. CONTRACTOR IS RESPONSIBLE FOR ALL RELOCATIONS, INCLUDING BUT NOT LIMITED TO, ALL UTILITIES, STORM DRAINAGE, SIGNS, ETC. AS REQUIRED TO PERFORM THE WORK. ALL WORK SHALL BE IN ACCORDANCE WITH GOVERNING AUTHORITIES SPECIFICATIONS AND SHALL BE APPROVED BY SUCH. ALL COSTS SHALL BE INCLUDED IN BASE BID.
6. UNLESS MODIFIED BY THE PROJECT SPECIFICATIONS, ALL SITEWORK SHALL BE CONSTRUCTED IN ACCORDANCE WITH THE "STANDARD SPECIFICATIONS FOR ROAD AND BRIDGE CONSTRUCTION" AS ADOPTED BY THE ILLINOIS DEPARTMENT OF TRANSPORTATION, LATEST EDITION, EXCLUDING THE BASIS OF PAYMENT PROVISIONS. CONTRACTOR SHALL ADHERE TO SUBMITTAL PROCEDURES AS OUTLINED IN PROJECT SPEC SECTION 01330.
7. ALL WORK SHALL BE DONE IN COMPLIANCE WITH THE PROJECT SWPPP, SEE SPEC SECTION 02370. CONSTRUCT ALL BMP COMPONENTS SHOWN ON SWPPP SHEETS. DISTURB ONLY THOSE AREAS REQUIRED FOR THE WORK.
8. THE CONTRACTOR IS RESPONSIBLE FOR THE DEMOLITION, REMOVAL, AND DISPOSAL, IN A LOCATION APPROVED BY ALL GOVERNING AUTHORITIES, OF ALL STRUCTURES, PADS, WALLS, FLUMES, FOUNDATIONS, PARKING, DRIVES, DRAINAGE, STRUCTURES, UTILITIES, ETC., SUCH THAT THE IMPROVEMENTS SHOWN ON THE REMAINING PLANS CAN BE CONSTRUCTED. ALL FACILITIES TO BE REMOVED SHALL BE UNDERCUT TO SUITABLE MATERIAL AND BROUGHT TO GRADE WITH SUITABLE COMPACTED FILL MATERIAL PER THE PROJECT SPECIFICATIONS.
9. THE CONTRACTOR IS RESPONSIBLE FOR REMOVING AND DISPOSING ALL DEBRIS FROM THE SITE IN A LAWFUL MANNER. THE CONTRACTOR IS RESPONSIBLE FOR OBTAINING ALL PERMITS REQUIRED FOR DEMOLITION AND DISPOSAL AT NO ADDITIONAL COST TO THE OWNER.
10. DAMAGE TO ALL EXISTING CONDITIONS TO REMAIN WILL BE REPLACED IN KIND AT CONTRACTOR'S EXPENSE.
11. CONTRACTOR MUST COORDINATE CONSTRUCTION ACTIVITIES AND STAGING WITH THE OWNER PRIOR TO BEGINNING WORK SO THAT EXISTING SITE OPERATIONS ARE NOT IMPEDED DURING ALL STAGES OF WORK.
12. THE CONTRACTOR SHALL SAWCUT THE BOUNDARY OF REMOVALS AS REQUIRED TO PROVIDE A NEAT EDGE ON EXISTING PAVEMENT, CURB/GUTTER, SIDEWALKS, ETC. WHICH WILL REMAIN.
13. CONTRACTOR IS RESPONSIBLE FOR FIELD CHECKING ALL PROJECT BENCHMARKS FOR POSSIBLE DISTURBANCE PRIOR TO UTILIZING THEM FOR STAKING OR GRADE CONTROL.
14. BENCHMARK DESCRIPTIONS VARY AS TO THE TYPE AND LOCATION OF MONUMENT UTILIZED. CONTRACTOR IS RESPONSIBLE FOR VERIFYING EXACT BENCHMARK LOCATION WITH THE SURVEYOR OF RECORD PRIOR TO USE.
16. FOLLOWING THE STAKEOUT OF ANY FACILITY, THE CONTRACTOR SHALL CONFIRM THE CONSISTENCY OF THE STAKES WITH THE PLAN DIMENSIONS PRIOR TO CONSTRUCTING THE FACILITY. THE CONTRACTOR IS RESPONSIBLE FOR COORDINATING ALL DRAWINGS CONTAINING DIMENSIONS TO ENSURE THAT THE PLAN DIMENSIONS ARE CONSISTENT WITH THE STAKING POINTS OR COORDINATES PROVIDED, IF APPLICABLE.
17. CONTRACTOR IS RESPONSIBLE FOR TRAFFIC CONTROL AS PER SPEC SECTION 02899 AND THE DETAIL SHEETS FOR WORK ADJACENT TO NORTH 6TH STREET.
18. WHERE CONTRACTOR ENCOUNTERS FIELD TILES, HE SHALL:
    - INSTALL SANITARY LINES BELOW FIELD TILES, IF POSSIBLE.
    - MAINTAIN ONE FOOR OF SEPARATION WITH FIELD TILES AND PROPOSED PIPING, IF POSSIBLE.
    - REPAIR ANY BROKEN FIELD TILES AS THEY ARE FOUND.
19. CONTRACTOR SHALL NOT CUT OR REMOVE LIVING OR DEAD TREES FROM APRIL 1 THROUGH SEPTEMBER 30 AS CONDITIONED BY THE U.S. ARMY CORPS OF ENGINEERS

GRADING NOTES

1. FLARED END SECTIONS SHALL BE PRECAST REINFORCED CONCRETE (PRC) CONFORMING TO THE REQUIREMENTS OF AASHTO M-170 CLASS III, WALL-B REINFORCED CONCRETE PIPE.
2. IF ANY EXISTING STRUCTURES TO REMAIN ARE DAMAGED DURING CONSTRUCTION IT SHALL BE THE CONTRACTOR'S RESPONSIBILITY TO REPAIR AND/OR REPLACE THE EXISTING STRUCTURE AS NECESSARY TO RETURN IT TO EXISTING CONDITIONS OR BETTER AT NO ADDITIONAL COST TO THE CONTRACT.
3. ALL STORM PIPE ENTERING STRUCTURES SHALL BE GROUTED INSIDE AND OUT TO ASSURE CONNECTION AT STRUCTURE IS WATERTIGHT. ALL STORM STRUCTURES SHALL HAVE A SMOOTH, UNIFORM POURED MORTAR INVERT FROM INVERT IN TO INVERT OUT.
4. THE CONTRACTOR SHALL ADHERE TO ALL TERMS & CONDITIONS AS OUTLINED IN THE SWPPP AND GENERAL N.P.D.E.S. PERMIT FOR STORMWATER DISCHARGE ASSOCIATED WITH CONSTRUCTION ACTIVITIES.
5. CONTRACTOR SHALL ADJUST AND/OR SAWCUT EXISTING PAVEMENT AS NECESSARY TO ASSURE A SMOOTH FIT AND CONTINUOUS GRADE.
6. CONTRACTOR SHALL ASSURE POSITIVE DRAINAGE AWAY FROM STRUCTURES FOR ALL NATURAL AND PAVED AREAS. ALL CUT OR FILL SLOPES SHALL BE 4:1 OR FLATTER UNLESS OTHERWISE NOTED.
7. ALL AREAS DISTURBED BY CONSTRUCTION ACTIVITIES SHALL RECEIVE A MINIMUM OF 4" OF TOPSOIL. CONTRACTOR SHALL APPLY EROSION CONTROL BLANKET TO ALL SLOPES 4H:1V OR STEEPER. CONTRACTOR SHALL SEED DISTURBED AREAS IN ACCORDANCE WITH SPECIFICATIONS UNTIL A HEALTHY STAND OF GRASS IS OBTAINED.
8. TOPOGRAPHIC INFORMATION TAKEN FROM FIELD SURVEYS COMPLETED BY THE UPCHURCH GROUP. IF CONTRACTOR DOES NOT ACCEPT EXISTING TOPOGRAPHY AS SHOWN ON THE PLANS, WITHOUT EXCEPTION, HE SHALL HAVE MADE, AT HIS EXPENSE, A TOPOGRAPHIC SURVEY BY A REGISTERED LAND SURVEYOR LICENSED IN ILLINOIS AND SUBMIT IT TO THE OWNER'S REPRESENTATIVE FOR REVIEW.
9. ANY LOT CORNERS OR MONUMENTS DISTURBED BY CONSTRUCTION SHALL BE REPLACED BY THE CONTRACTOR BY A REGISTERED LAND SURVEYOR LICENSED IN ILLINOIS.
10. **DEWATERING OF EXCAVATIONS SHALL BE EXPECTED TO INSTALL THE WORK, PER GEOTECHNICAL REPORT. CONTRACTOR SHALL PROVIDE DEWATERING SYSTEMS AS REQUIRED FOR ALL EXCAVATIONS, PER THE PROJECT SPECIFICATIONS.**

UTILITY NOTES

1. CONTRACTOR SHALL COORDINATE WITH ALL UTILITY COMPANIES, INCLUDING THE CITY OF MATTOON, FOR INSTALLATION REQUIREMENTS AND SPECIFICATIONS.
2. THE CONTRACTOR IS SPECIFICALLY CAUTIONED THAT THE LOCATION AND/OR ELEVATION OF EXISTING UTILITIES AS SHOWN ON THESE PLANS IS BASED ON RECORDS OF THE VARIOUS UTILITY COMPANIES, AND WHERE POSSIBLE, MEASUREMENTS TAKEN IN THE FIELD. THE INFORMATION IS NOT TO BE RELIED ON AS BEING EXACT OR COMPLETE. THE CONTRACTOR MUST CALL THE APPROPRIATE UTILITY COMPANIES AT LEAST 72 HOURS BEFORE ANY EXCAVATION TO REQUEST EXACT FIELD LOCATION OF UTILITIES. IT SHALL BE THE RESPONSIBILITY OF THE CONTRACTOR TO RELOCATE ALL EXISTING UTILITIES WHICH CONFLICT WITH THE PROPOSED IMPROVEMENTS SHOWN ON THE PLANS. CONTRACTOR IS RESPONSIBLE FOR REPAIRS OF DAMAGE TO ANY EXISTING UTILITY DURING CONSTRUCTION AT NO COST TO THE OWNER.
3. CONTRACTOR SHALL NOTIFY THE UTILITY AUTHORITY'S INSPECTORS 72 HOURS BEFORE CONNECTING TO ANY EXISTING LINE.
4. CONTRACTOR IS RESPONSIBLE FOR COMPLYING WITH THE STANDARD SPECIFICATIONS FOR WATER AND SEWER MAIN CONSTRUCTION IN ILLINOIS, CURRENT EDITION, AND THE PROJECT SPECIFICATIONS.
5. CONTRACTOR SHALL MAINTAIN A MINIMUM OF 48" COVER ON ALL WATERLINES AND FORCEMAINS AND A MINIMUM OF 36" OVER THE SANITARY LINES UNLESS OTHERWISE SHOWN ON THE PLANS.
6. CONTRACTOR SHALL REFER TO PLANS AND SPECIFICATIONS OF THE APPROPRIATE DISCIPLINE FOR ACTUAL LOCATION OF ALL UTILITY ENTRANCES TO INCLUDE SANITARY SEWER LATERALS, DOMESTIC AND FIRE PROTECTION WATER SERVICE, ELECTRICAL, TELEPHONE, AND GAS SERVICE. CONTRACTOR SHALL COORDINATE INSTALLATION OF UTILITIES, IN SUCH A MANNER TO AVOID CONFLICTS AND ASSURE PROPER DEPTHS ARE ACHIEVED AS WELL AS COORDINATION WITH CITY UTILITY AS TO LOCATION AND SCHEDULING FOR TIE-INS/CONNECTIONS PRIOR TO CONNECTING TO EXISTING UTILITIES.
7. CONTRACTOR SHALL COMPLY TO THE FULLEST EXTENT WITH THE LATEST STANDARDS OF OSHA DIRECTIVES OR ANY OTHER AGENCY HAVING JURISDICTION FOR EXCAVATION AND TRENCHING PROCEDURES. THE CONTRACTOR SHALL USE SUPPORT SYSTEMS, SLOPING, BENCHING, AND OTHER MEANS OF PROTECTION. THIS IS TO INCLUDE BUT NOT LIMITED FOR ACCESS AND EGRESS FROM ALL EXCAVATION AND TRENCHING. CONTRACTOR IS RESPONSIBLE TO COMPLY WITH PERFORMANCE CRITERIA FOR OSHA.
8. DETECTABLE LINE MARKING TAPE SHALL BE USED ON ALL LINES, WATER LINES SHALL HAVE TAPE THAT READS "WARNING WATER LINE", SEWER LINES SHALL HAVE TAPE THAT READS "WARNING SEWER LINE", ALL TAPE TO BE PLACED A MINIMUM OF 18" ABOVE LINES. No. 12 INSULATED COPPER TRACER WIRE WILL BE RUN IN THE TRENCH WITH ALL PRESSURE LINES.
9. ALL SANITARY MANHOLES SHALL BE TESTED FOR WATER-TIGHTNESS IN ACCORDANCE WITH ASTM C969, "STANDARD PRACTICE FOR INFILTRATION AND EXFILTRATION ACCEPTANCE TESTING OF INSTALLED PRECAST CONCRETE PIPE SEWER LINES".
10. EXISTING PAVEMENT OR SIDEWALK REMOVED TO INSTALL UNDERGROUND PIPING, UTILITIES, AND DUCT BANK SHALL BE REPLACED IN KIND FOR THE FULL WIDTH OF THE TRENCH. EDGES OF PAVEMENT AND SIDEWALK SHALL BE SAWCUT IN ORDER TO PROVIDE A CLEAN EDGE. TRENCHES IN AREAS TO RECEIVE PROPOSED PAVEMENT SHALL BE CAPPED WITH 12" OF CA6, COMPACTED TO 97% STD PROCTOR AND SHALL BE MAINTAINED IN A SERVICEABLE CONDITION UNTIL THE FINAL PAVEMENT HAS BEEN INSTALLED.
11. ALL EXISTING AND PROPOSED UTILITY CROSSINGS/CONFLICTS SHALL MEET OR EXCEED HORIZONTAL AND VERTICAL SEPARATION REQUIREMENTS PER SECTION 41-2.01 OF THE STANDARD SPECIFICATIONS FOR WATER AND SEWER MAIN CONSTRUCTION IN ILLINOIS OR ILLINOIS DEPARTMENT OF PUBLIC HEALTH.
12. ALL BURIED UTILITIES SHALL BE INSPECTED AND APPROVED BEFORE BACKFILLING.

LEGEND

	PROPERTY LINE
	EXISTING RIGHT OF WAY LINE
	EXISTING EASEMENT LINE
592	EXISTING CONTOUR
	EXISTING BRUSH/TREE LINE
	EXISTING DITCHLINE
	EXISTING FENCE
ST	EXISTING STORM SEWER
CP	EXISTING CULVERT PIPE
T	EXISTING TELEPHONE
UGE	EXISTING UNDERGROUND ELECTRIC
OHE	EXISTING OVERHEAD ELECTRIC
G	EXISTING GAS
SS	EXISTING SANITARY SEWER
W	EXISTING POTABLE WATER
UD	EXISTING UNDERDRAIN
FM	EXISTING FORCEMAIN
CI	EXISTING CHLORINE LINE
	EXISTING LAWN IRRIGATION
6"PW	EXISTING PLANT WATER
RAW	EXISTING PRIMARY (UNTREATED) INFLUENT
CSO	EXISTING COMBINED SEWER OVERFLOW
DR	EXISTING DRAIN LINE
A	EXISTING AIR LINE
	EXISTING FIRE HYDRANT
WV	EXISTING WATER VALVE
W	EXISTING WATER METER
	EXISTING YARD HYDRANT
	EXISTING VALVE
	EXISTING LIGHT POLE
	EXISTING CULVERT END SECTION
CB D	EXISTING STORM INLET
E T S M	EXISTING MANHOLE
J	EXISTING JUNCTION BOX
SP	EXISTING STAND PIPE
SB E	EXISTING ELECTRIC SPLICE BOX
B7	SOIL BORING
	EXISTING POWER POLE
	EXISTING GUY WIRE
	EXISTING LANDSCAPE LIGHT
	EXISTING MONITORING WELL
W	EXISTING SPRAY HEAD
	EXISTING TREE
	EXISTING CONCRETE
	CONCRETE SIDEWALK SEE DETAIL C4/C-303
	CONCRETE PAVEMENT SEE DETAIL A1/C-303
	ASPHALT PAVEMENT SEE DETAIL A1/C-303
	EXISTING PAVEMENT/SIDEWALK TO BE REMOVED
	TEMPORARY AGGREGATE SURFACE FOR CONTRACTOR LAYDOWN

	PROPOSED DEMOLITION/REMOVAL
	LIMITS OF GROUND DISTURBANCE
SF	PROPOSED SILT FENCE
592	PROPOSED CONTOUR
	PROPOSED DITCHLINE
	PROPOSED FENCE
ST	PROPOSED STORM SEWER
T	PROPOSED TELEPHONE
E	PROPOSED ELECTRIC
C	PROPOSED COMMUNICATIONS
G	PROPOSED GAS LINE
SS	PROPOSED SANITARY SEWER
W	PROPOSED POTABLE WATER
UD	PROPOSED UNDERDRAIN
FM	PROPOSED FORCEMAIN
CI	PROPOSED CHLORINE LINE
RAS	PROPOSED RETURN ACTIVATED SLUDGE
6"PW	PROPOSED PLANT WATER
RAW	PROPOSED PRIMARY (UNTREATED) INFLUENT
CSO	PROPOSED COMBINED SEWER OVERFLOW
DR	PROPOSED DRAIN LINE
A	PROPOSED AIR LINE
	PROPOSED FIRE HYDRANT
WV	PROPOSED WATER VALVE
W	PROPOSED WATER METER
	PROPOSED YARD HYDRANT
	PROPOSED VALVE
	PROPOSED LIGHT POLE
	PROPOSED CULVERT END SECTION
CB D	PROPOSED STORM INLET
E T S M	PROPOSED MANHOLE
J	PROPOSED JUNCTION BOX
M	PROPOSED METER VAULT
SP	PROPOSED STAND PIPE
SB E	PROPOSED ELECTRIC SPLICE BOX
	SLOPE ARROW
#	STRUCTURE NUMBER
TC	TOP OF CONCRETE ELEVATION
TP	TOP OF PAVEMENT ELEVATION
GR	GROUND ELEVATION
SW	SIDEWALK ELEVATION
FL	FLOWLINE ELEVATION
RL	RIDGE LINE
DS	DOWNSPOUT
HP	HIGH POINT
3:1	SLOPE CALL-OUT (HORIZ:VERT)
U/S D/S	UPSTREAM, DOWNSTREAM
XX/C-XX	DETAIL # / SHEET #
	PROPOSED SIGN
	ITEM TO BE REMOVED
	INLET PROTECTION, SEE A3/C-301
	ROCK CHECK DAM, SEE C5/C-301
	RIPRAP APRON

CMT

License No. 184-000613

CONSULTANTS

MAY 2015

CSO SATELLITE TREATMENT FACILITY CONTRACT NO. 1

OWNER

MATTOON

MATTOON, ILLINOIS: *Working Together to Build the Future*

CITY OF MATTOON

MATTOON, ILLINOIS

MARK	DATE	DESCRIPTION

PROJECT NO:	12078-03-00
CAD DWG FILE:	120780300-C-001 GENERAL NOTES.DWG
DESIGNED BY:	SCR
DRAWN BY:	SCR
CHECKED BY:	SCR
APPROVED BY:	TPB

COPYRIGHT: CRAWFORD, MURPHY & TILLY, INC. 2015

SHEET TITLE

GENERAL NOTES

C-001

Path: J:\Mattoon\12078-03\Draw\Sheets\1-CSO Satellite Treatment\120780300-C-001 GENERAL NOTES.dwg
Date: Wednesday, June 17, 2015 11:38:11 AM

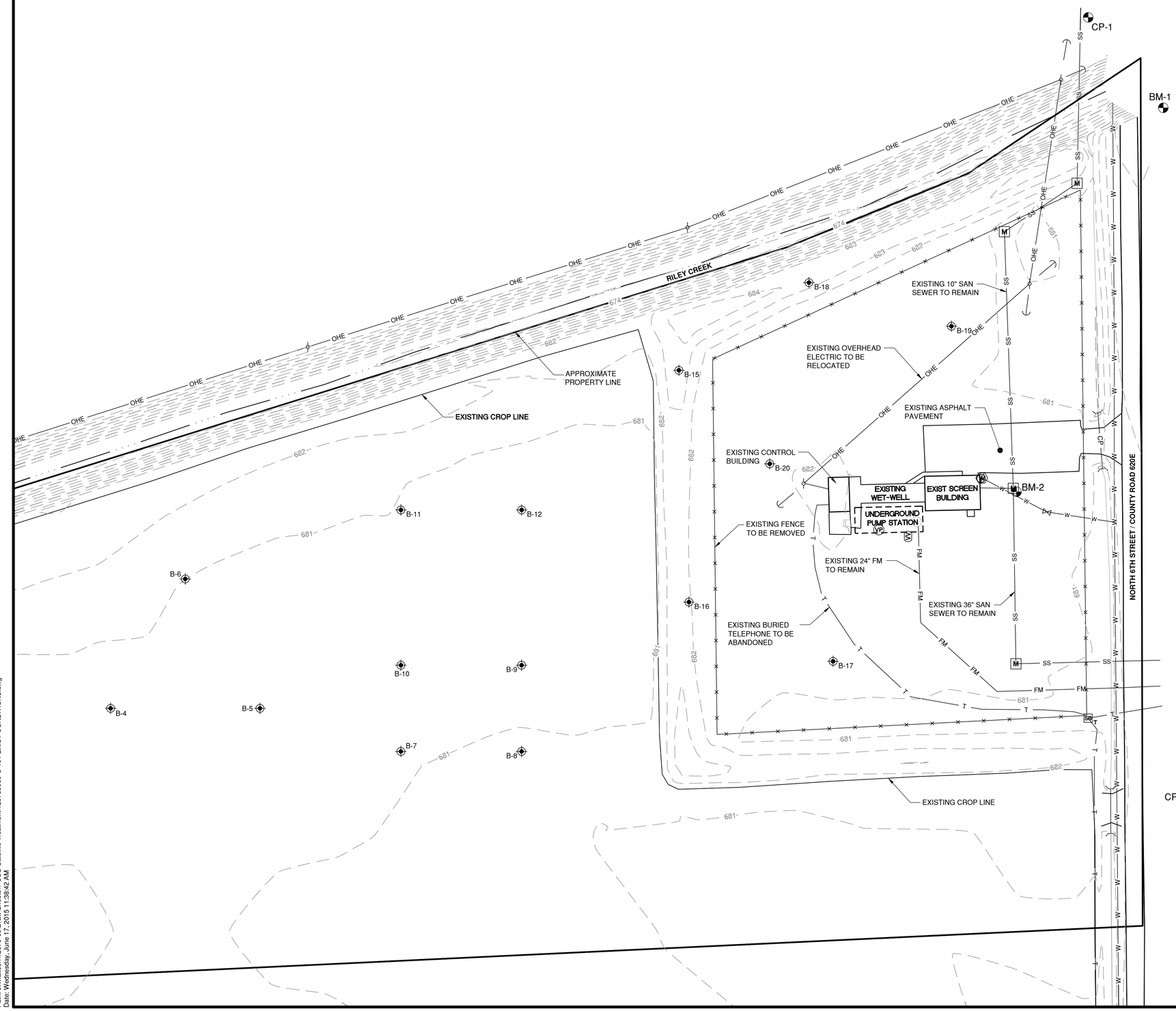

NORTH

0 30 60

SCALE IN FEET

HORIZONTAL CONTROL

CP-1 IRON PIN NORTH OF RILEY CREEK, WEST OF 6TH STREET
NORTHING: 1035429.253
EASTING: 976850.98

CP-4 IRON PIN AT SOUTHEAST CORNER OF PUMP STATION PROPERTY, EAST SIDE OF 6TH STREET
NORTHING: 1034983.011
EASTING: 976909.523

BENCHMARKS (NAVD88)

BM-1 BOLT IN SE WINGWALL OF BRIDGE OVER RILEY CREEK ON NORTH 6TH STREET
ELEVATION: 684.107

BM-2 SANITARY MANHOLE DUE EAST OF EXISTING SCREEN BUILDING
RIM ELEVATION: 681.16

CMT

License No. 184-000613

CONSULTANTS

MAY 2015

CSO SATELLITE TREATMENT FACILITY CONTRACT NO. 1

OWNER

MATTOON

MATTOON, ILLINOIS: *Working Together to Build the Future*

CITY OF MATTOON

MATTOON, ILLINOIS

MARK	DATE	DESCRIPTION

PROJECT NO:	12078-03-00
CAD DWG FILE:	120780300-C-101 EXIST CONDITIONS.DWG
DESIGNED BY:	SCR
DRAWN BY:	SCR
CHECKED BY:	SCR
APPROVED BY:	TJB

COPYRIGHT: CRAWFORD, MURPHY & TILLY, INC. 2015

SHEET TITLE

EXISTING CONDITIONS PLAN

C-101

Path: J:\Mattoon\12078-03\Draw\Sheets\1-CSO Satellite Treatment\120780300-C-101 EXIST CONDITIONS.dwg
Date: Wednesday, June 17, 2015 11:38:42 AM

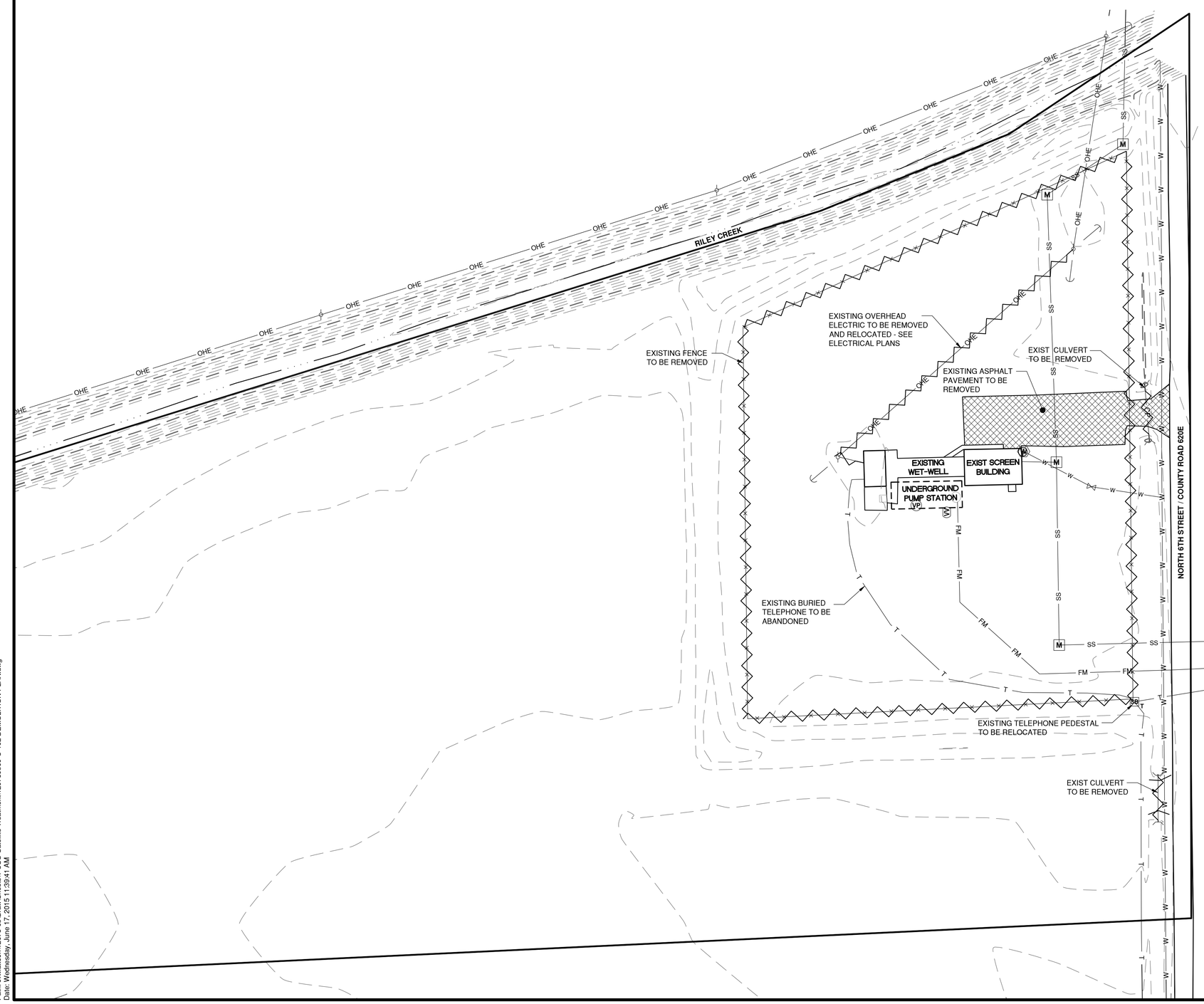

NORTH

0 30 60

SCALE IN FEET

NOTES

1. ALL EXISTING ITEMS ARE TO REMAIN UNLESS OTHERWISE NOTED.
2. CONTRACTOR SHALL REMOVE ONLY THE FENCE THAT INTERFERES WITH CONSTRUCTING THE TREATMENT PROCESS UNTIL THE NEW FENCE CAN BE CONSTRUCTED. THE CONTRACTOR SHALL DELAY REMOVING THE FENCE PARALLELING NORTH 6th STREET UNTIL SUCH TIME AS IT INTERFERES WITH NEW WORK ON THE EASTERN EDGE OF THE SITE.
3. CONTRACTOR SHALL PROVIDE TEMPORARY CHAIN-LINK FENCING PARALLELING NORTH 6th STREET WHEN WORK IN THIS AREA REQUIRES REMOVAL OF THE EXISTING FENCE TO MAINTAIN SECURITY OF THE PUMP STATION.
4. CONTRACTOR SHALL PROVIDE AN ALL-WEATHER ACCESS ROUTE TO THE EXISTING SCREEN BUILDING AT ALL TIMES DURING CONSTRUCTION.

CMT

License No. 184-000613

CONSULTANTS

MAY 2015

CSO SATELLITE TREATMENT FACILITY CONTRACT NO. 1

OWNER

MATTOON

MATTOON, ILLINOIS: *Working Together to Build the Future*

CITY OF MATTOON

MATTOON, ILLINOIS

MARK	DATE	DESCRIPTION

PROJECT NO:	12078-03-00
CAD DWG FILE:	120780300-C-102 DEMOLITION PLAN.DWG
DESIGNED BY:	SCR
DRAWN BY:	SCR
CHECKED BY:	SCR
APPROVED BY:	TAB

COPYRIGHT: CRAWFORD, MURPHY & TILLY, INC. 2015

SHEET TITLE

DEMOLITION PLAN

C-102

Path: J:\Mattoon\12078-03\Draw\Sheets\1-CSO Satellite Treatment\120780300-C-102 DEMOLITION PLAN.dwg
Date: Wednesday, June 17, 2015 11:39:41 AM

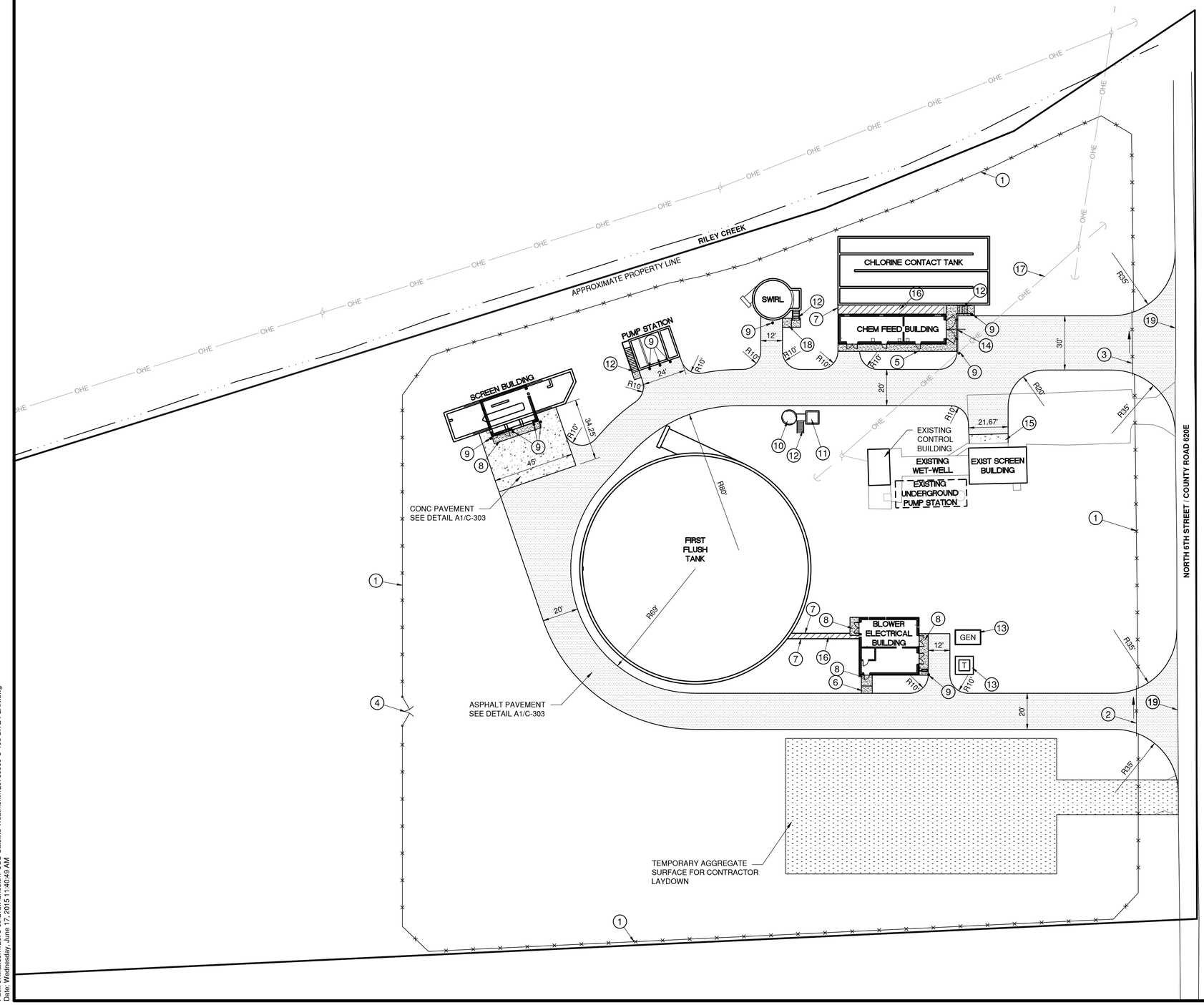

SITE PLAN NOTES

1. CONTRACTOR LAYDOWN AREA SHOWN IS APPROXIMATE. CONTRACTOR SHALL BE RESPONSIBLE FOR ALL TEMPORARY IMPROVEMENTS TO FACILITATE CONSTRUCTION, INCLUDING GRADING, AGGREGATE SURFACES, AND TEMPORARY UTILITIES.
2. CONTRACTOR SHALL BE RESPONSIBLE FOR FINAL RESTORATION OF LAYDOWN AREA, INCLUDING REMOVAL OF AGGREGATE SURFACES, PLACEMENT OF TOPSOIL (4" MIN), AND TURF ESTABLISHMENT (IDOT TYPE 1 LAWN MIX).
3. CONCRETE PAVEMENT SHALL HAVE TIED SAWCUT CONTRACTION JOINTS AS PER SPEC SECTION 02751 AND DETAIL A4/C-303.

SHEET KEY NOTES

1. 6' CHAINLINK FENCE - SEE DETAIL A2/C-302
2. 28' MANUAL CHAINLINK SLIDE GATE SEE DETAIL A4/C-302
3. 36' MANUAL CHAINLINK SLIDE GATE SEE DETAIL A4/C-302
4. 16' WIDE DOUBLE-SWING CHAINLINK GATE SEE DETAIL A2/C-302
5. WALKWAY ADJACENT TO BUILDING SEE ARCH PLANS
6. 6' WIDE SIDEWALK - SEE DETAIL C4/C-303
7. ALUMINUM LANDSCAPE EDGING - 3/16" THICK x 5.5" DEEP SURE-LOC EDGING OR APPROVED EQUAL - INSTALL PER MANUFACTURER'S RECOMMENDATIONS
8. CONCRETE STOOP - SEE STRUCTURAL DETAILS
9. PIPE BOLLARD (TYP) - SEE DETAIL A5/C-303
10. FOUL SEWER PUMP STATION - SEE STRUCTURAL AND MECHANICAL PLANS
11. FOUL SEWER PUMP STATION HEADBOX - SEE STRUCTURAL AND MECHANICAL PLANS
12. ACCESS STAIRS WITH LANDING - SEE STRUCTURAL DETAILS
13. PAD MOUNTED ELECTRICAL EQUIPMENT - SEE ELEC PLANS
14. TRUCK DOCK WITH DOCK BUMPERS AND OVERHEAD MONO-RAIL CRANE - SEE ARCH PLANS
15. CONCRETE PAVEMENT AT TRENCH DRAIN - SEE GRADING PLAN FOR DETAIL
16. 4" OF 1-1/2" RIVER ROCK ON FILTER FABRIC WITH UNDERDRAIN - SEE GRADING PLAN FOR UNDERDRAIN INFORMATION
17. EXISTING OVERHEAD ELECTRIC LINE TO BE RELOCATED SEE ELECTRICAL PLANS
18. 5' WIDE SIDEWALK - SEE DETAIL C4/C-303
19. SAWCUT EXISTING EDGE OF PAVEMENT TO PROVIDE A CLEAN AND UNIFORM EDGE FOR NEW PAVEMENT

CMT

License No. 184-000613

CONSULTANTS

MAY 2015

CSO SATELLITE TREATMENT FACILITY CONTRACT NO. 1

OWNER

MATTOON

MATTOON, ILLINOIS: *Working Together to Build the Future*

CITY OF MATTOON

MATTOON, ILLINOIS

MARK	DATE	DESCRIPTION

PROJECT NO:	12078-03-00
CAD DWG FILE:	120780300-C-103 SITE PLAN.DWG
DESIGNED BY:	SCR
DRAWN BY:	SCR
CHECKED BY:	SCR
APPROVED BY:	TKB

COPYRIGHT: CRAWFORD, MURPHY & TILLY, INC. 2015

SHEET TITLE

SITE PLAN

C-103

Path: J:\Mattoon\12078-03\Draw\Sheets\1-CSO Satellite Treatment\120780300-C-103 SITE PLAN.dwg
Date: Wednesday, June 17, 2015 11:40:49 AM

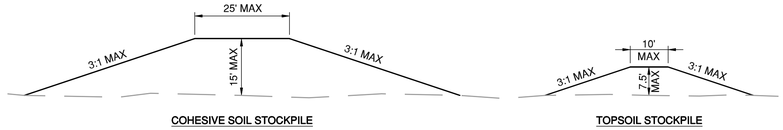

SPOILS DISPOSAL DETAIL

N.T.S.

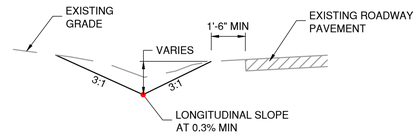

DITCH REGRADING DETAIL

N.T.S.

TRENCH DRAIN DETAIL

N.T.S.

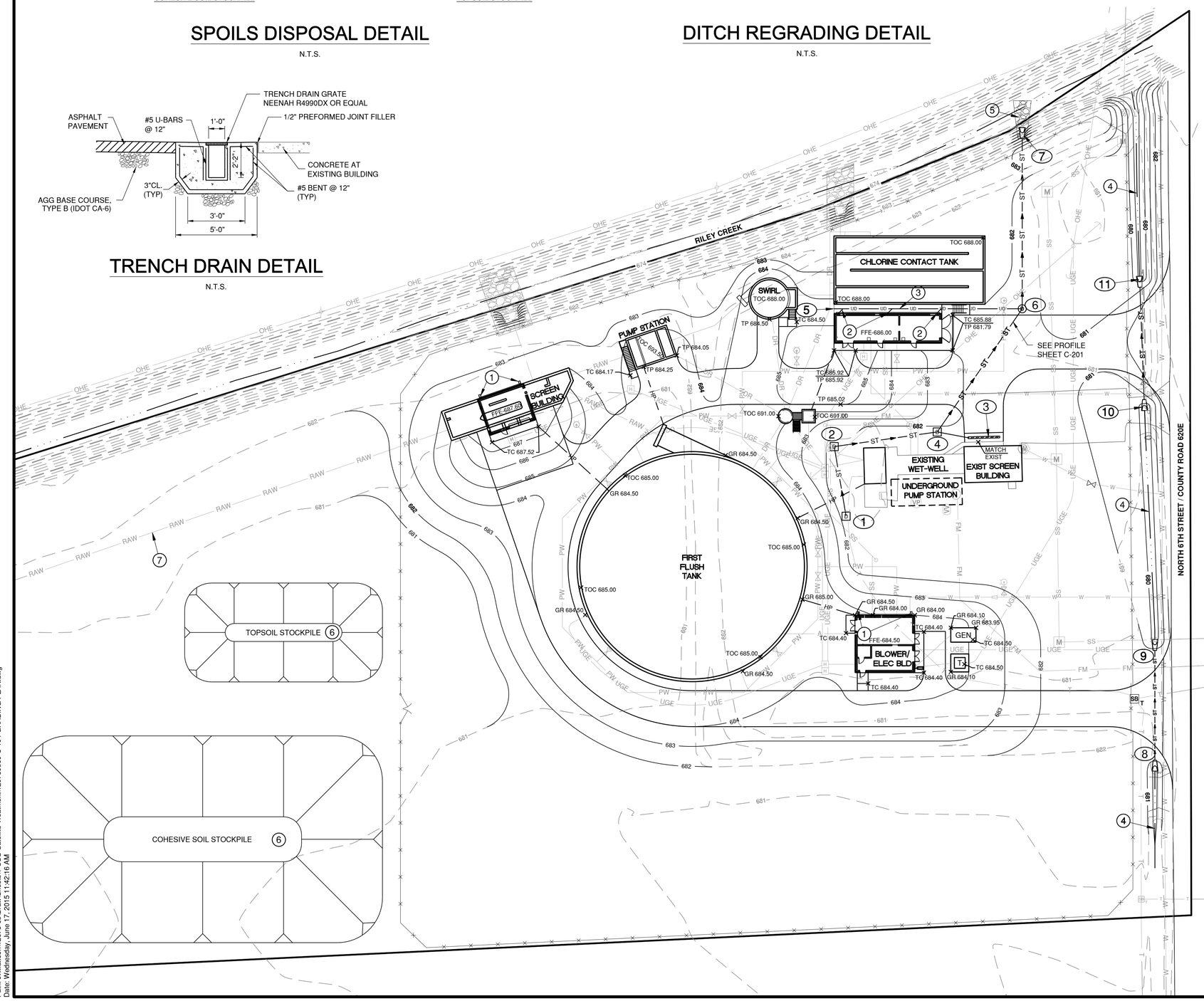

SHEET KEY NOTES

1. BUILDING DOWNSPOUT - DRAINS TO SPLASHPAD
2. 6" HDPE PIPE TO CONNECT BUILDING DOWNSPOUT TO 8" HDPE DOWNSPOUT HEADER. SEE ARCHITECTURAL PLANS FOR CONNECTION AT BUILDING
3. 8" DOWNSPOUT HEADER @ 1.0% MIN SLOPE. HEADER LOCATED UNDER LANDSCAPE ROCK SHALL BE FABRIC-WRAPPED PERFORATED PIPE. TRENCH BACKFILL FOR PERFORATED SECTION SHALL BE IDOT CA7
4. EXISTING ROADSIDE DITCH TO BE REGRADED. SEE DETAIL THIS SHEET
5. RIP-RAP AT END SECTION - SEE DETAIL A5/C-306
6. EXCESS COHESIVE SOIL AND EXCESS TOPSOIL REMAINING AFTER FINAL GRADING SHALL BE STOCKPILED IN SEPARATE STOCKPILES - SEE SPOILS DISPOSAL DETAIL, THIS SHEET
7. CONTRACTOR TO MAINTAIN ACCESS TO FUTURE CONTRACT WORK (BY OTHERS) - MATERIALS SHALL NOT BE STORED IN THE VICINITY OF THE CONVEYANCE SEWER ALIGNMENT

PIPE SCHEDULE

REACH	PIPE SIZE (IN) PIPE MATERIAL	LENGTH (FT)	SLOPE
1 - 2	12" HDPE	39	0.51%
2 - 4	12" HDPE	58	0.35%
3 - 4	8" HDPE	17	6.17%
4 - 6	12" HDPE	83	0.60%
5 - 6	8" HDPE*	100	1.00%
6 - 7	12" HDPE	95	0.64%
8 - 9	12" ERS**	61	0.30%
10 - 11	12" ERS**	63	0.30%

* 8" HDPE LOCATED UNDER LANDSCAPE ROCK SHALL BE FABRIC-WRAPPED PERFORATED PIPE. TRENCH BACKFILL FOR PERFORATED SECTION SHALL BE IDOT CA7.

** ELLIPTICAL RCP PIPE EQUIVALENT TO 12" DIAMETER RCP PIPE SHALL BE CLASS IV

STORM STRUCTURE SCHEDULE

STRUCT NO.	STRUCTURE TYPE CASTING TYPE	RIM/FL ELEV	INV IN	INV OUT
1	IDOT INLET TYPE A WITH NEENAH GRATE R-4342	681.75	----	678.70
2	IDOT INLET TYPE B WITH NEENAH GRATE R-4342	681.50	678.50	678.50
3	NEENAH TRENCH DRAIN SEE DETAIL THIS SHEET	681.55	----	679.38
4	IDOT MH TY-A, 4'Ø WITH TYPE 1 FRAME & OPEN LID	681.30	678.30 (E) 678.30 (W)	678.20
5	CLEANOUT	----	----	679.50
6	IDOT MH TY-A, 4'Ø WITH TYPE 1 FRAME & CLOSED LID	681.35	677.70 (S) 678.50 (W)	677.60
7	12" PRECAST CONCRETE FLARED END SECTION	----	----	677.00
8	12" ELLIPTICAL PRECAST CONC FLARED END SECTION	----	679.57	----
9	12" ELLIPTICAL PRECAST CONC FLARED END SECTION	----	----	679.36
10	12" ELLIPTICAL PRECAST CONC FLARED END SECTION	----	678.97	----
11	12" ELLIPTICAL PRECAST CONC FLARED END SECTION	----	----	678.73

CMT

License No. 184-000613

CONSULTANTS

MAY 2015

CSO SATELLITE TREATMENT FACILITY CONTRACT NO. 1

OWNER

MATTOON

MATTOON, ILLINOIS: *Working Together to Build the Future*

CITY OF MATTOON

MATTOON, ILLINOIS

MARK	DATE	DESCRIPTION

PROJECT NO:	12078-03-00
CAD DWG FILE:	120780300-C-104 GRADING PLAN.DWG
DESIGNED BY:	SCR
DRAWN BY:	SCR
CHECKED BY:	SCR
APPROVED BY:	TJB

COPYRIGHT: CRAWFORD, MURPHY & TILLY, INC. 2015

SHEET TITLE

GRADING PLAN

C-104

SHEET 11 OF 128

Path: J:\Mattoon\12078-03\Draw\Sheets\1-CSO Satellite Treatment\120780300-C-104 GRADING PLAN.dwg
Date: Wednesday, June 17, 2015 11:42:16 AM

SHEET KEY NOTES

1. SANITARY SEWER SERVICE FROM BUILDING PLUMBING SEE PROFILE SHEET C-202
2. CLEANOUT (TYP) - SEE DETAIL A1/C-304
3. 12" STAINLESS AIR PIPING - SEE MECHANICAL DETAILS
4. BURIED ELECTRIC DUCT BANK - SEE ELECTRICAL PLANS
5. 4" SDR 35 PVC SANITARY SERVICE AT 1.00% MIN SLOPE TO PROPOSED MANHOLE
6. EXISTING WATER SERVICE TO SCREEN BUILDING TO REMAIN
7. 6" D.I.P. POTABLE WATER SERVICE - 4' MIN COVER
8. HOT-TAP REQUIRED AT EXISTING WATER MAIN - USE 12"x6" STAINLESS STEEL TAPPING SLEEVE AND 6" TAPPING VALVE WITH VALVE BOX
9. 36" - MJ x MJ - 22.5° D.I.P. BEND
10. FIRE HYDRANT WITH ISOLATION VALVE & VALVE BOX SEE DETAIL C4/C-305
11. CAUTION: UTILITY CROSSING/ CONFLICT AREA - REFER TO THE STANDARD SPECIFICATIONS FOR WATER AND SEWER MAIN CONSTRUCTION IN ILLINOIS AND ILLINOIS DEPARTMENT OF PUBLIC HEALTH REQUIREMENTS FOR REQUIRED SEPARATION FROM POTABLE WATER - CONTRACTOR SHALL PROVIDE CASING PIPE AS REQUIRED
12. 4" D.I.P. PLANT WATER LINE - 4' MIN COVER REQUIRED
13. BURIED GATE VALVE WITH VALVE BOX ON PLANT WATER LINE - SEE DETAIL A4/C-305 FOR TYPICAL INSTALLATION
14. PLANT WATER YARD HYDRANT WITH ISOLATION VALVE AND VALVE BOX - SEE DETAIL A1/C-305
15. 4" PLANT WATER CONNECTION TO FIRST FLUSH TANK WITH SHUT-OFF VALVE - SEE MECHANICAL PLANS
16. 6"x4" REDUCER REQUIRED FOR 4" POTABLE WATER SERVICE TO BLOWER/ELECTRICAL BUILDING
17. EXISTING TELEPHONE PEDESTAL TO BE RELOCATED CONTRACTOR TO COORDINATE WITH UTILITY PROVIDER RELOCATION COSTS FROM UTILITY PROVIDER TO BE BORE BY THE OWNER
18. 66" GFRPM INFLUENT SEWER - SEE PROFILE SHEET C-201
19. 60" GFRPM OVERFLOW LINE TO RILEY CREEK - SEE PROFILE SHEET C-201
20. 60" PRECAST FLARED END SECTION WITH SAFETY GRATE SEE DETAIL SHEET C-306 - CONCRETE COLLAR REQUIRED AT CONNECTION
21. 66" GFRPM SEWER TO FIRST FLUSH TANK - SEE PROFILE SHEET C-202
22. 36" D.I.P. SEWER TO PUMP STATION
    37' LF OF 36" DIP @ 0.89%
    INV EL AT SCREEN BUILDING = 669.83
    INV EL AT PUMP STATION = 669.50
23. 36" D.I.P. FORCEMAIN TO SWIRL CONCENTRATOR
    47' LF OF 36" DIP @ 0.57%
    INV EL AT PUMP STATION = 677.25
    INV EL AT SWIRL CONC = 676.98
24. 6" D.I.P. WET-WELL DRAIN TO FOUL SEWER PUMP STATION
    65' LF OF 6" DIP @ 3.04%
    INV EL AT PUMP STATION = 663.50
    INV EL AT FOUL SEWER PS = 661.50
25. 36" D.I.P. SWIRL EFFLUENT TO CHLORINE CONTACT TANK
    20' LF OF 36" DIP @ 1.25%
    INV EL AT SWIRL CONC = 678.50
    INV EL AT CHLORINE CONTACT = 678.25
26. 12" D.I.P. SWIRL CONCENTRATOR DRAIN TO FOUL SEWER P.S.
    52' LF OF 12" DIP @ 0.32%
    INV EL AT SWIRL CONC = 675.17
    INV EL AT FOUL SEWER PS = 675.00
    SEE STRUCT PLANS FOR CONNECTION AT STRUCTURE
27. 36" D.I.P. CHLORINE CONTACT TANK EFFLUENT TO RILEY CREEK - SEE PROFILE SHEET C-201
28. 36" PRECAST FLARED END SECTION WITH SAFETY GRATE SEE DETAIL SHEET C-306 - CONCRETE COLLAR REQUIRED AT CONNECTION
29. 10" D.I.P. CHLORINE CONTACT TANK DRAIN TO FOUL SEWER PUMP STATION
    60' LF OF 10" DIP @ 2.48%
    INV EL AT CHLORINE TANK = 673.50
    INV EL AT FOUL SEWER PS = 672.00
    SEE MECH PLANS FOR CONNECTION AT STRUCTURE
30. 12" D.I.P. FIRST FLUSH TANK DRAIN TO FOUL SEWER P.S.
    30' LF OF 12" DIP @ 1.17%
    INV EL AT FIRST FLUSH TANK = 653.35
    INV EL AT FOUL SEWER PS = 653.00
    SEE MECH PLANS FOR CONNECTION AT STRUCTURE
31. 12" D.I.P. DRAIN FROM FOUL SEWER HEADBOX TO EXISTING RILEY CREEK PUMP STATION WET-WELL
    81' LF OF 12" DIP @ 0.43%
    IINV EL AT FOUL SEWER HEADBOX = 675.00
    INV EL AT EXIST WET-WELL = 674.65
32. 10" D.I.P. FOUL SEWER PIPE TO FIRST FLUSH TANK
    45' LF OF 10" DIP @ 1.11%
    INV EL AT FOUL SEWER HEADBOX = 678.50
    INV EL AT FIRST FLUSH TANK = 678.00

SHEET KEY NOTES

33. EXISTING 12" WATER MAIN
34. RIP RAP AT END SECTION - SEE DETAIL A5/C-306
35. 2" CONDUIT WITH PULL STRING FOR INTERNET SERVICE TO JUST OUTSIDE OF THE FENCE LINE - SEE ELECTRICAL PLANS CONTRACTOR TO COORDINATE EXACT LOCATION WITH UTILITY
36. OVERHEAD ELECTRIC LINE RELOCATED UNDERGROUND SEE ELECTRICAL PLANS (TYP)
37. CORE-DRILL AND LINK-SEAL REQUIRED FOR CONNECTION TO EXISTING WET-WELL (12" THICK REINFORCED CONCRETE WALL WITH #4 @ 12" EACH WAY, EACH FACE)
38. CONTRACTOR TO MAINTAIN ACCESS TO FUTURE CONTRACT WORK (BY OTHERS) - MATERIALS SHALL NOT BE STORED IN THE VICINITY OF THE CONVEYANCE SEWER ALIGNMENT

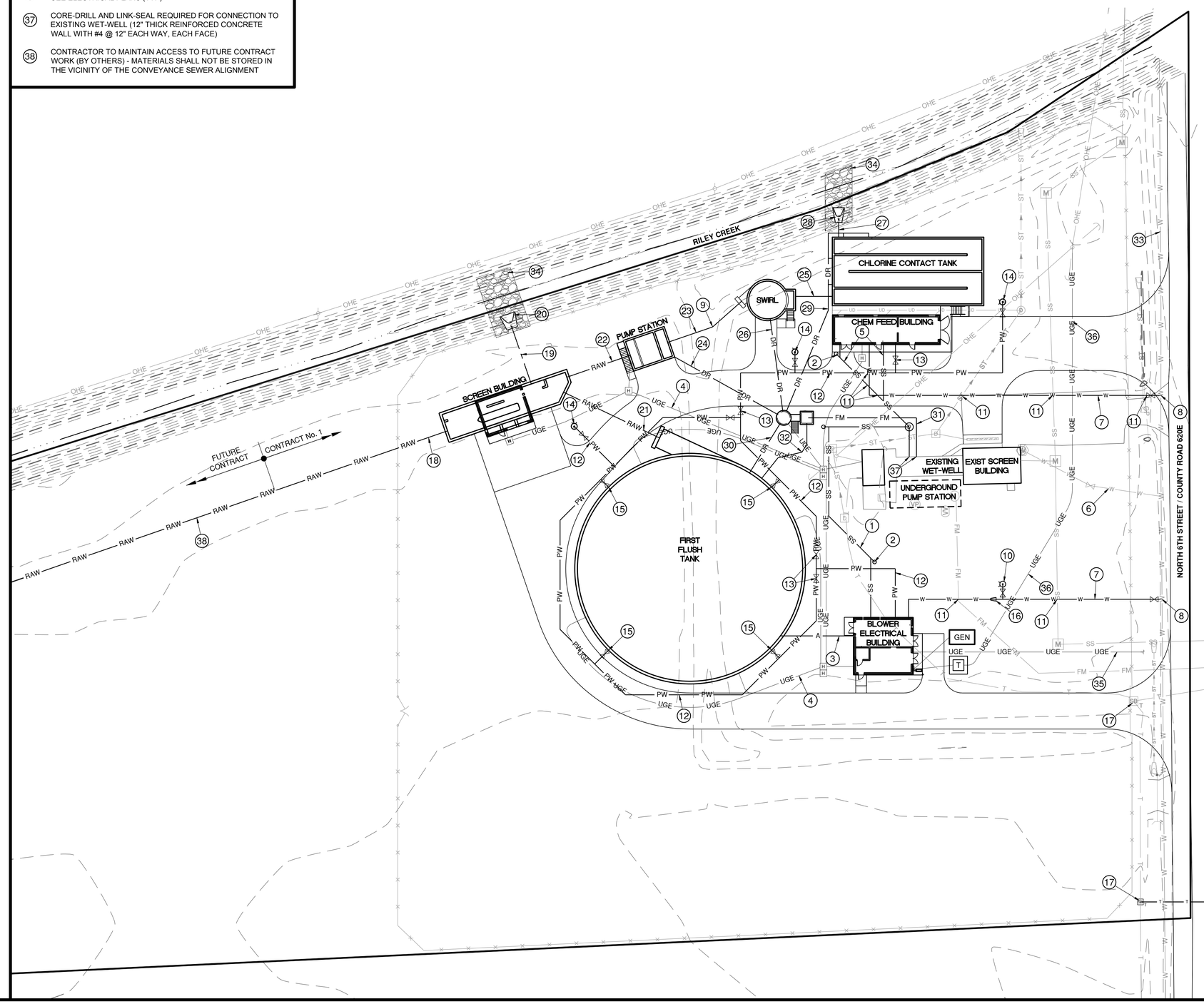

CMT

License No. 184-000613

CONSULTANTS

MAY 2015

CSO SATELLITE TREATMENT FACILITY CONTRACT NO. 1

OWNER

MATTOON

MATTOON, ILLINOIS: *Working Together to Build the Future*

CITY OF MATTOON

MATTOON, ILLINOIS

MARK	DATE	DESCRIPTION

PROJECT NO:	12078-03-00
CAD DWG FILE:	120780300-C-105 SITE PIPING.DWG
DESIGNED BY:	SCR
DRAWN BY:	SCR
CHECKED BY:	SCR
APPROVED BY:	TJB

COPYRIGHT: CRAWFORD, MURPHY & TILLY, INC. 2015

SHEET TITLE

SITE PIPING & UTILITY PLAN

C-105

Path: J:\Mattoon\12078-03\Draw\Sheets\1-CSO Satellite Treatment\120780300-C-105 SITE PIPING.dwg
Date: Wednesday, June 17, 2015 11:43:25 AM

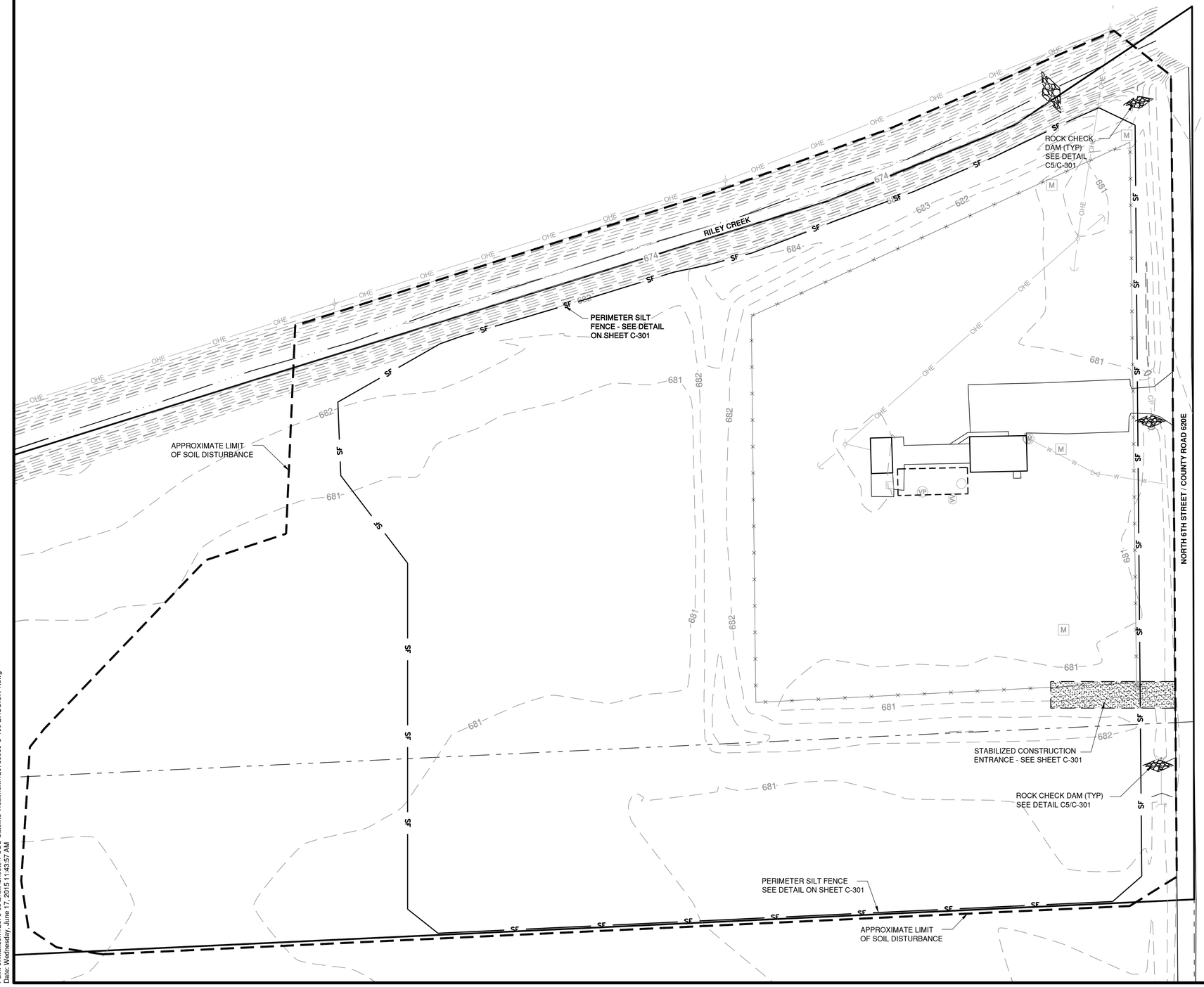

EROSION CONTROL NOTES

1. THE CONTRACTOR SHALL INSTALL ALL APPLICABLE EROSION CONTROL MEASURES PRIOR TO ANY SITE DISTURBANCE.
2. THE CONTRACTOR SHALL ADHERE TO ALL TERMS AND CONDITIONS AS SHOWN ON THIS EROSION CONTROL PLAN AND THE ILLINOIS GENERAL N.P.D.E.S PERMIT. MEASURES SHALL BE INITIATED AS SOON AS PRACTICABLE.
3. ALL UNSURFACED (OR PERMANENT NON-AGGREGATE) AREAS DISTURBED BY CONSTRUCTION OPERATIONS SHALL RECEIVE 6" (MIN.) OF TOPSOIL, EROSION CONTROL BLANKET, FERTILIZER AND SEED AS PER THE SPECIFICATIONS. ALL TURF AREAS SHALL BE CHECKED REGULARLY TO MAINTAIN A HEALTHY STAND OF GRASS. AREAS SHALL BE FERTILIZED AND RESEEDED AS REQUIRED.
4. IF SOIL STOCKPILING IS UTILIZED, SILT FENCES SHALL BE USED TO HELP CONTAIN THE SEDIMENT AND AVOID EROSION.
5. ANY EXISTING ENTRANCES USED FOR CONSTRUCTION ACCESS SHALL BE MAINTAINED TO A CONDITION WHICH WILL PREVENT TRACKING OR FLOW OF MUD ONTO PUBLIC STREETS.
6. THE CONTRACTOR SHALL BE RESPONSIBLE FOR REMOVING SEDIMENT WHICH MAY HAVE COLLECTED IN THE STORM SEWER SYSTEM.
7. THE CONTRACTOR SHALL BE RESPONSIBLE FOR ADJUSTING THE EROSION AND SEDIMENTATION CONTROL MEASURES AS NECESSARY TO BE MAINTAINED IN FULLY FUNCTIONAL CONDITION THROUGHOUT THE ENTIRE PROJECT.
8. CONTRACTOR TO REMOVE ALL CONSTRUCTION DEBRIS, MUD, TEMPORARY FENCING, ETC. UPON COMPLETION OF CONSTRUCTION.

MAINTENANCE NOTES

ALL MEASURES STATED ON THIS EROSION CONTROL PLAN SHALL BE MAINTAINED IN FULLY FUNCTIONAL CONDITION UNTIL NO LONGER REQUIRED FOR A COMPLETED PHASE OF WORK OR FINAL STABILIZATION OF THE SITE. ALL EROSION AND SEDIMENTATION CONTROL MEASURES SHALL BE CHECKED BY A QUALIFIED INSPECTOR AT LEAST ONCE EVERY SEVEN CALENDAR DAYS AND WITHIN 24 HOURS OF THE END OF A 0.5" RAINFALL EVENT, AND CLEANED AND REPAIRED IN ACCORDANCE WITH THE FOLLOWING:

1. INLET PROTECTION DEVICES AND BARRIERS SHALL BE REPAIRED OR REPLACED IF THEY SHOW SIGNS OF UNDERMINING OR DETERIORATION.
2. ALL TURF AREAS SHALL BE CHECKED REGULARLY TO SEE THAT A GOOD STAND IS MAINTAINED, AREAS SHOULD BE FERTILIZED, WATERED, AND RESODDED AS NEEDED.
3. SILT FENCES SHALL BE REPAIRED TO THEIR ORIGINAL CONDITIONS IF DAMAGED. SEDIMENT SHALL BE REMOVED FROM SILT FENCES WHEN IT REACHES ONE-HALF THE HEIGHT OF THE SILT FENCE.
4. THE CONSTRUCTION ENTRANCES SHALL BE MAINTAINED IN A CONDITION WHICH WILL PREVENT TRACKING OR FLOW OF MUD ONTO PUBLIC RIGHT-OF-WAY. THIS MAY REQUIRE PERIODIC TOP DRESSING OF THE CONSTRUCTION ENTRANCES AS CONDITIONS DEMAND.

CMT

License No. 184-000613

CONSULTANTS

MAY 2015

CSO SATELLITE TREATMENT FACILITY CONTRACT NO. 1

OWNER

MATTOON

MATTOON, ILLINOIS: *Working Together to Build the Future*

CITY OF MATTOON

MATTOON, ILLINOIS

MARK	DATE	DESCRIPTION

PROJECT NO:	12078-03-00
CAD DWG FILE:	120780300-C-106 EROSION 1.DWG
DESIGNED BY:	SCR
DRAWN BY:	SCR
CHECKED BY:	SCR
APPROVED BY:	TBD

COPYRIGHT: CRAWFORD, MURPHY & TILLY, INC. 2015

SHEET TITLE

EROSION & SEDIMENTATION CONTROL - PHASE 1

C-106

Path: J:\Mattoon\12078-03\Draw\Sheets\1-CSO Satellite Treatment\120780300-C-106 EROSION 1.dwg
Date: Wednesday, June 17, 2015 11:43:57 AM

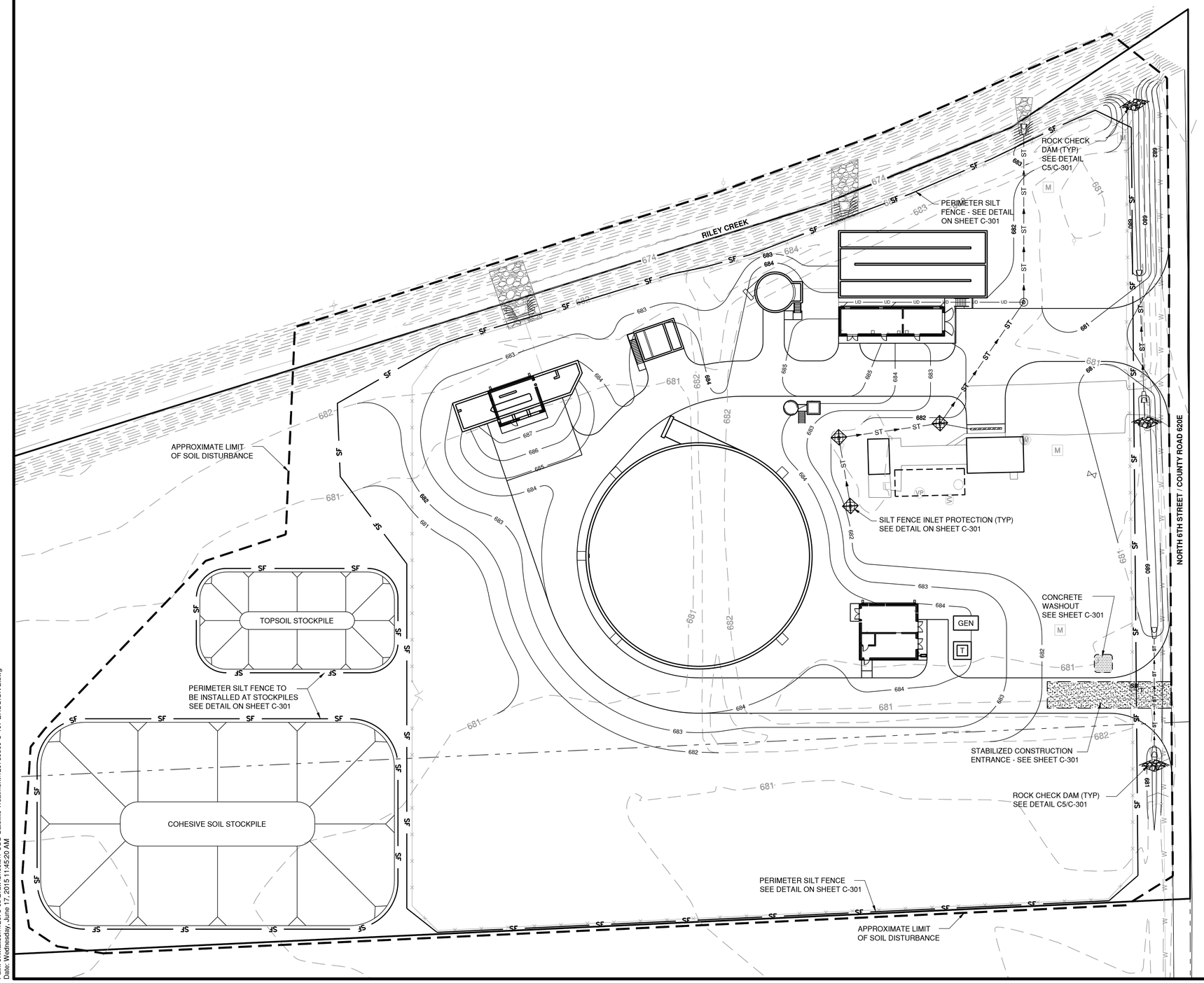

Path: J:\Mattoon\12078-03\Draw\Sheets\1-CSO Satellite Treatment\120780300-C-107 EROSION 2.dwg
Date: Wednesday, June 17, 2015 11:45:20 AM

NORTH
0 30 60
SCALE IN FEET

EROSION CONTROL NOTES

1. THE CONTRACTOR SHALL INSTALL ALL APPLICABLE EROSION CONTROL MEASURES PRIOR TO ANY SITE DISTURBANCE.
2. THE CONTRACTOR SHALL ADHERE TO ALL TERMS AND CONDITIONS AS SHOWN ON THIS EROSION CONTROL PLAN AND THE ILLINOIS GENERAL N.P.D.E.S PERMIT. MEASURES SHALL BE INITIATED AS SOON AS PRACTICABLE.
3. ALL UNSURFACED (OR PERMANENT NON-AGGREGATE) AREAS DISTURBED BY CONSTRUCTION OPERATIONS SHALL RECEIVE 6" (MIN.) OF TOPSOIL, EROSION CONTROL BLANKET, FERTILIZER AND SEED AS PER THE SPECIFICATIONS. ALL TURF AREAS SHALL BE CHECKED REGULARLY TO MAINTAIN A HEALTHY STAND OF GRASS. AREAS SHALL BE FERTILIZED AND RESEEDED AS REQUIRED.
4. IF SOIL STOCKPILING IS UTILIZED, SILT FENCES SHALL BE USED TO HELP CONTAIN THE SEDIMENT AND AVOID EROSION.
5. ANY EXISTING ENTRANCES USED FOR CONSTRUCTION ACCESS SHALL BE MAINTAINED TO A CONDITION WHICH WILL PREVENT TRACKING OR FLOW OF MUD ONTO PUBLIC STREETS.
6. THE CONTRACTOR SHALL BE RESPONSIBLE FOR REMOVING SEDIMENT WHICH MAY HAVE COLLECTED IN THE STORM SEWER SYSTEM.
7. THE CONTRACTOR SHALL BE RESPONSIBLE FOR ADJUSTING THE EROSION AND SEDIMENTATION CONTROL MEASURES AS NECESSARY TO BE MAINTAINED IN FULLY FUNCTIONAL CONDITION THROUGHOUT THE ENTIRE PROJECT.
8. CONTRACTOR TO REMOVE ALL CONSTRUCTION DEBRIS, MUD, TEMPORARY FENCING, ETC. UPON COMPLETION OF CONSTRUCTION.

MAINTENANCE NOTES

ALL MEASURES STATED ON THIS EROSION CONTROL PLAN SHALL BE MAINTAINED IN FULLY FUNCTIONAL CONDITION UNTIL NO LONGER REQUIRED FOR A COMPLETED PHASE OF WORK OR FINAL STABILIZATION OF THE SITE. ALL EROSION AND SEDIMENTATION CONTROL MEASURES SHALL BE CHECKED BY A QUALIFIED INSPECTOR AT LEAST ONCE EVERY SEVEN CALENDAR DAYS AND WITHIN 24 HOURS OF THE END OF A 0.5" RAINFALL EVENT, AND CLEANED AND REPAIRED IN ACCORDANCE WITH THE FOLLOWING:

1. INLET PROTECTION DEVICES AND BARRIERS SHALL BE REPAIRED OR REPLACED IF THEY SHOW SIGNS OF UNDERMINING OR DETERIORATION.
2. ALL TURF AREAS SHALL BE CHECKED REGULARLY TO SEE THAT A GOOD STAND IS MAINTAINED, AREAS SHOULD BE FERTILIZED, WATERED, AND RESODDED AS NEEDED.
3. SILT FENCES SHALL BE REPAIRED TO THEIR ORIGINAL CONDITIONS IF DAMAGED. SEDIMENT SHALL BE REMOVED FROM SILT FENCES WHEN IT REACHES ONE-HALF THE HEIGHT OF THE SILT FENCE.
4. THE CONSTRUCTION ENTRANCES SHALL BE MAINTAINED IN A CONDITION WHICH WILL PREVENT TRACKING OR FLOW OF MUD ONTO PUBLIC RIGHT-OF-WAY. THIS MAY REQUIRE PERIODIC TOP DRESSING OF THE CONSTRUCTION ENTRANCES AS CONDITIONS DEMAND.

CMT

License No. 184-000613

CONSULTANTS

MAY 2015

CSO SATELLITE TREATMENT FACILITY CONTRACT NO. 1

OWNER

MATTOON
MATTOON, ILLINOIS: *Working Together to Build the Future*

CITY OF MATTOON

MATTOON, ILLINOIS

MARK	DATE	DESCRIPTION

PROJECT NO:	12078-03-00
CAD DWG FILE:	120780300-C-107 EROSION 2.DWG
DESIGNED BY:	SCR
DRAWN BY:	SCR
CHECKED BY:	SCR
APPROVED BY:	TJK

COPYRIGHT: CRAWFORD, MURPHY & TILLY, INC. 2015

SHEET TITLE

EROSION & SEDIMENTATION CONTROL - PHASE 2

C-107

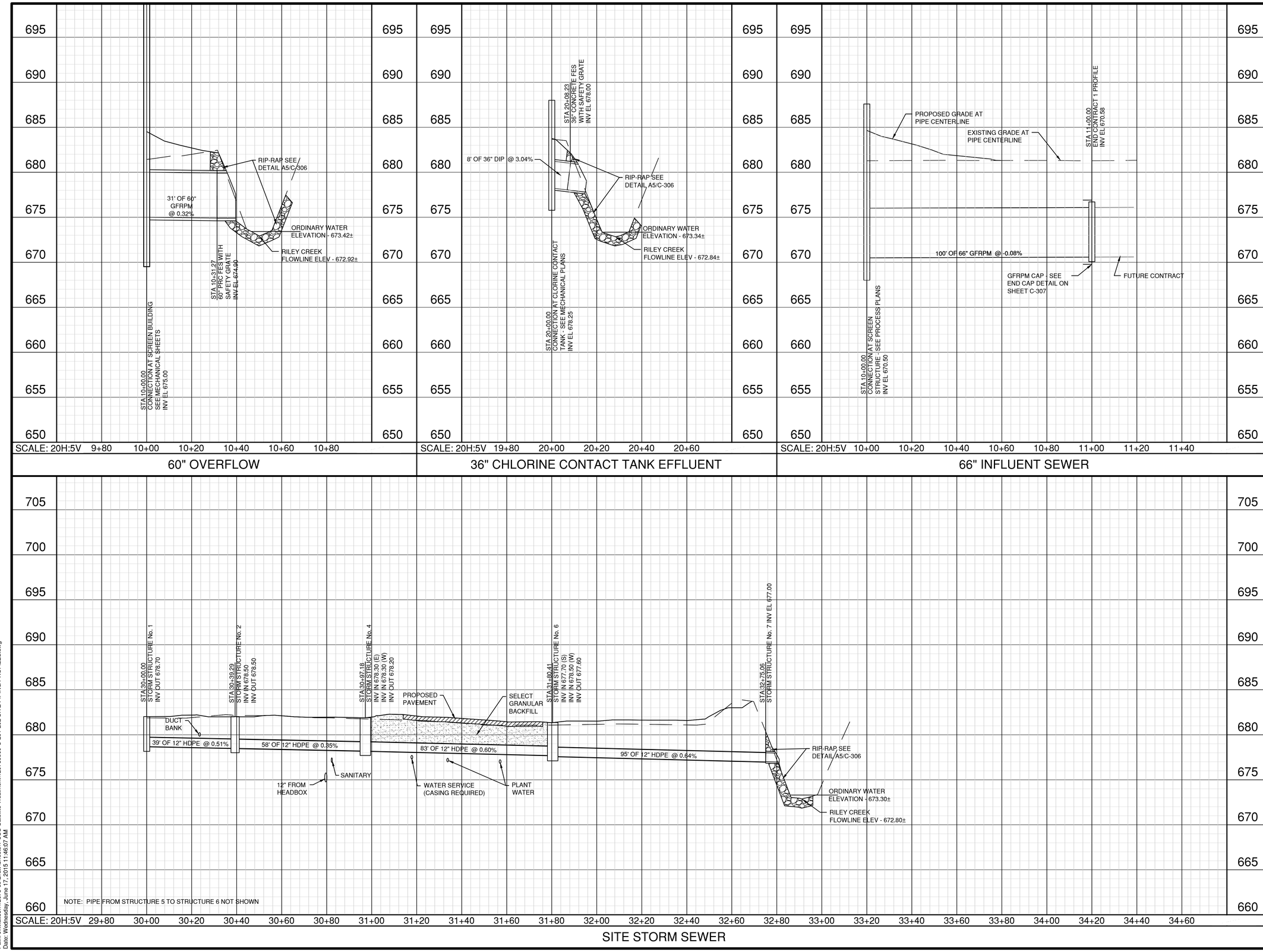

CMT

License No. 184-000613

CONSULTANTS

MAY 2015

CSO SATELLITE TREATMENT FACILITY CONTRACT NO. 1

OWNER

MATTOON

MATTOON, ILLINOIS: *Working Together to Build the Future*

CITY OF MATTOON

MATTOON, ILLINOIS

MARK	DATE	DESCRIPTION

PROJECT NO:	12078-03-00
CAD DWG FILE:	120780300-C-201-202 SITE PIPING PROFILES.DWG
DESIGNED BY:	SCR
DRAWN BY:	SCR
CHECKED BY:	SCR
APPROVED BY:	TJB

COPYRIGHT: CRAWFORD, MURPHY & TILLY, INC. 2015

SHEET TITLE

SITE PIPING PROFILES - 1

C-201

SHEET 15 OF 128

Path: J:\Mattoon\12078-03\Draw\Sheets\1-CSO Satellite Treatment\120780300-C-201-202 SITE PIPING PROFILES.dwg
Date: Wednesday, June 17, 2015 11:46:07 AM

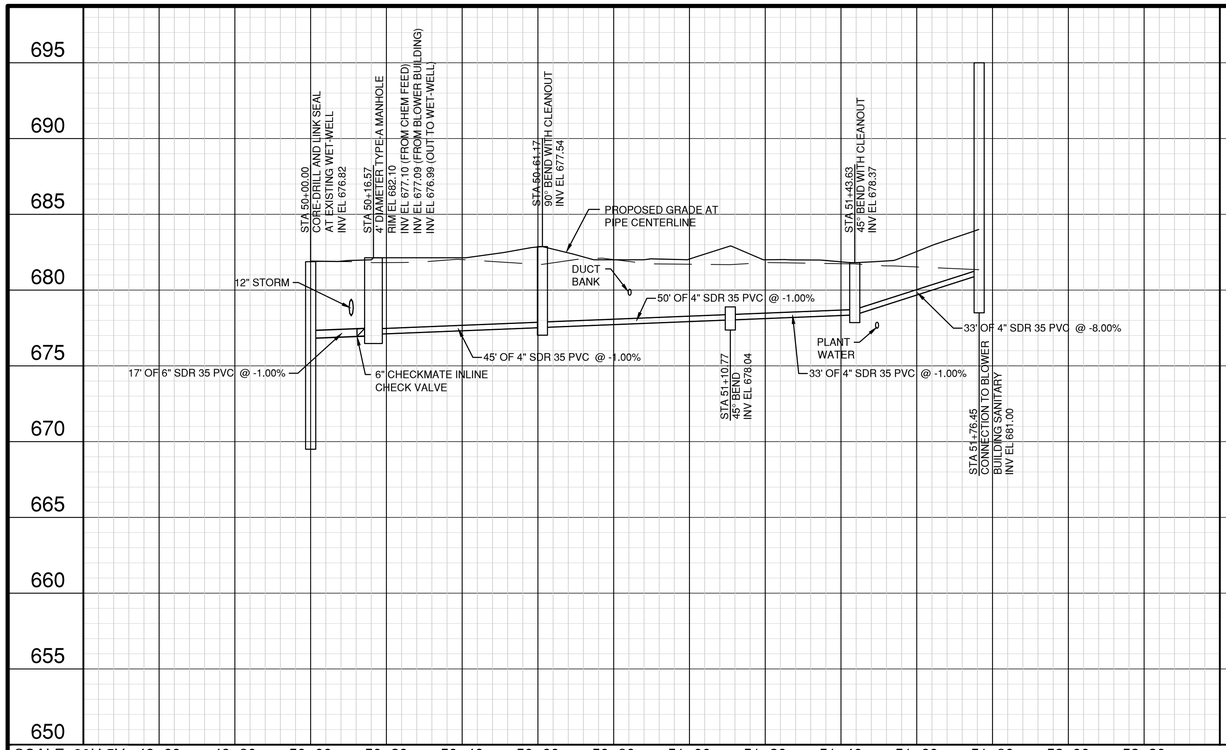

SITE SANITARY SEWER SERVICE

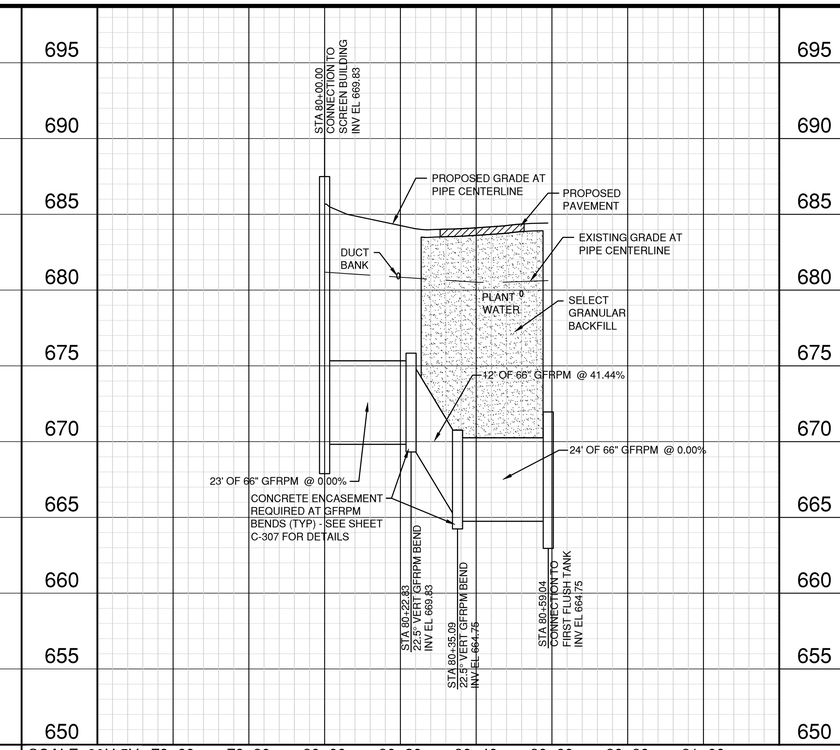

FIRST FLUSH TANK INFLUENT

CMT

License No. 184-000613

CONSULTANTS

MAY 2015

CSO SATELLITE
TREATMENT FACILITY
CONTRACT NO. 1

OWNER

MATTOON

MATTOON, ILLINOIS: *Working Together to Build the Future*

CITY OF MATTOON

MATTOON, ILLINOIS

MARK	DATE	DESCRIPTION

PROJECT NO:	12078-03-00
CAD DWG FILE:	120780300-C-201-202 SITE PIPING PROFILES.DWG
DESIGNED BY:	SCR
DRAWN BY:	SCR
CHECKED BY:	SCR
APPROVED BY:	TKB

COPYRIGHT: CRAWFORD, MURPHY & TILLY, INC. 2015

SHEET TITLE

SITE PIPING
PROFILES - 2

C-202

SHEET 16 OF 128

Path: J:\Mattoon\12078-03\Draw\Sheets\1-CSO Satellite Treatment\120780300-C-201-202 SITE PIPING PROFILES.dwg
Date: Wednesday, June 17, 2015 11:46:09 AM

SILT FENCE WITH WIRE SUPPORT PLAN

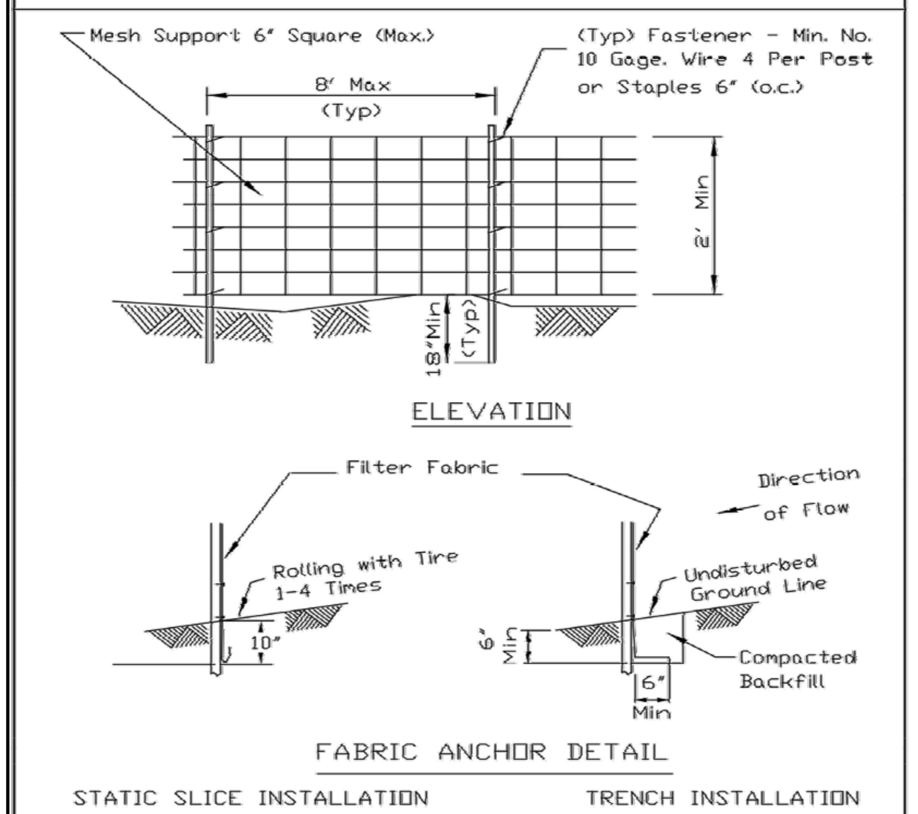

NOTES:
1. Silt fence shall be installed prior to any grading work in the area to be protected. They shall be maintained throughout the construction period and removed in conjunction with the final grading and site stabilization. Silt fence shall be placed on the flattest area available.
2. Filter fabric shall meet the requirements of material specification 592 Geotextile Table 1 or 2, Class I with equivalent opening size of at least 30 for nonwoven and 40 for woven.
3. Fence posts shall be either standard steel post or wood post with a minimum cross-sectional area of 3.0 sq. in.

REFERENCE		STANDARD DWG. NO.
Project ______		IUM-620A(W)
Designed ______ Date ______		SHEET 1 OF 2
Checked ______ Date ______		DATE 3-16-2012
Approved ______ Date ______		

STABILIZED CONSTRUCTION ENTRANCE PLAN

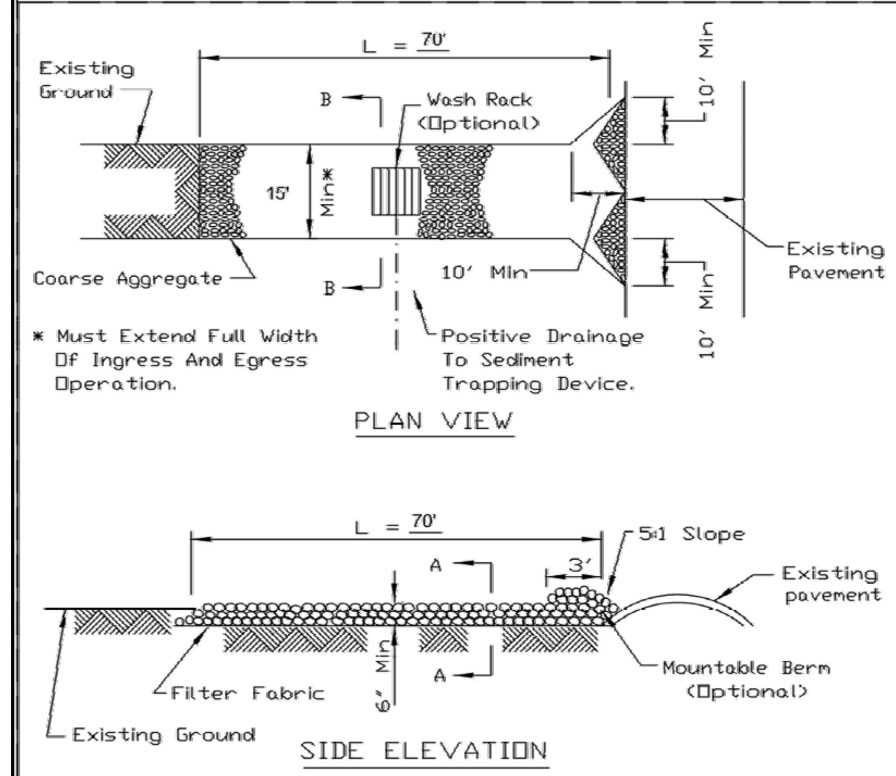

NOTES:
1. Filter fabric shall meet the requirements of material specification 592 GEOTEXTILE, Table I or 2, Class I, II or IV and shall be placed over the cleared area prior to the placing of rock.
2. Rock or reclaimed concrete shall meet one of the following IDOT coarse aggregate gradation, CA-1, CA-2, CA-3 or CA-4 and be placed according to construction specification 25 ROCKFILL using placement Method 1 and Class III compaction.
3. Any drainage facilities required because of washing shall be constructed according to manufacturers specifications.
4. If wash racks are used they shall be installed according to the manufacturer's specifications.

REFERENCE	NRCS Natural Resources Conservation Service	STANDARD DWG. NO.
Project ______		IL-630
Designed ______ Date ______		SHEET 1 OF 2
Checked ______ Date ______		DATE 8-18-94
Approved ______ Date ______		

AUTOCAD2006

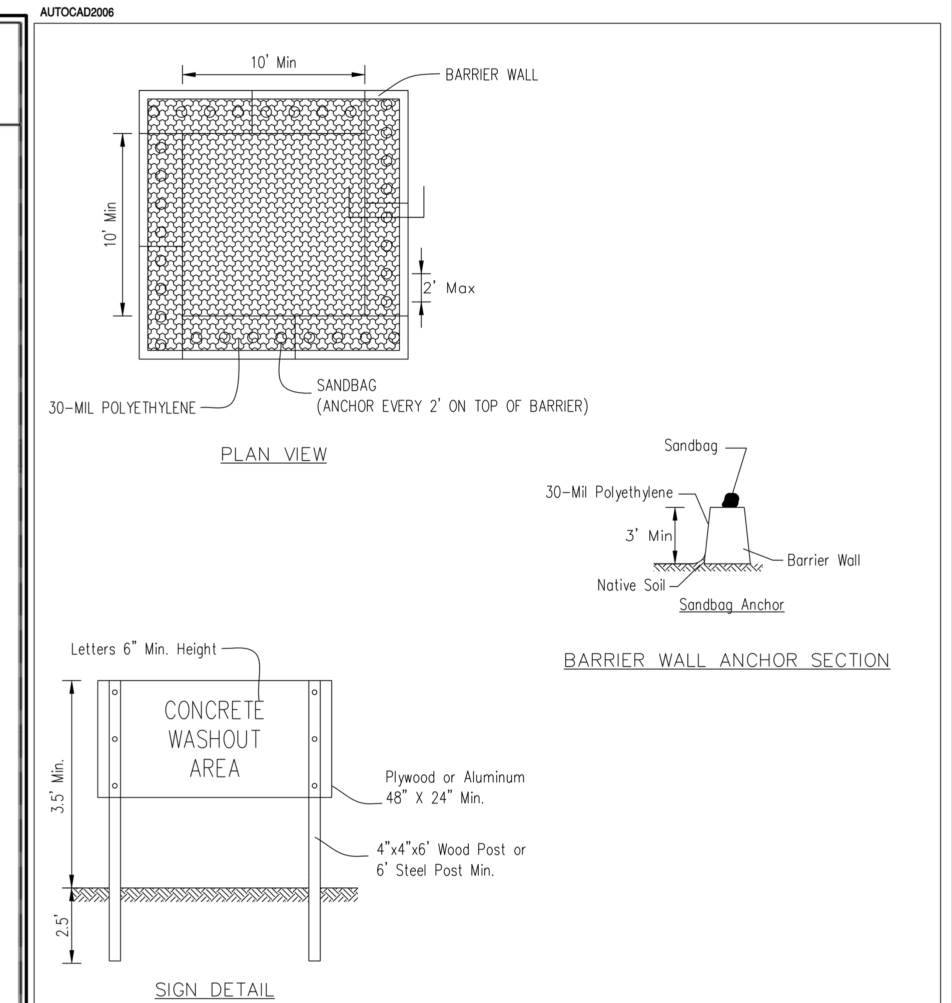

NOTES:
1. Maintaining temporary concrete washout facilities shall include removing and disposing of hardend concrete and/or slurry and returning the faciliities to a functional condition.
2. Facility shall be cleaned or reconstructed in a new area once washout becomes two-thirds full.

Sheet 3 of 3 | Drawing No. IUM-654BW | TEMPORARY CONCRETE WASHOUT FACILITY – BARRIER WALL | Designed ______ | Drawn B. JOHNSON 6/08 | Checked ______ | Approved ______

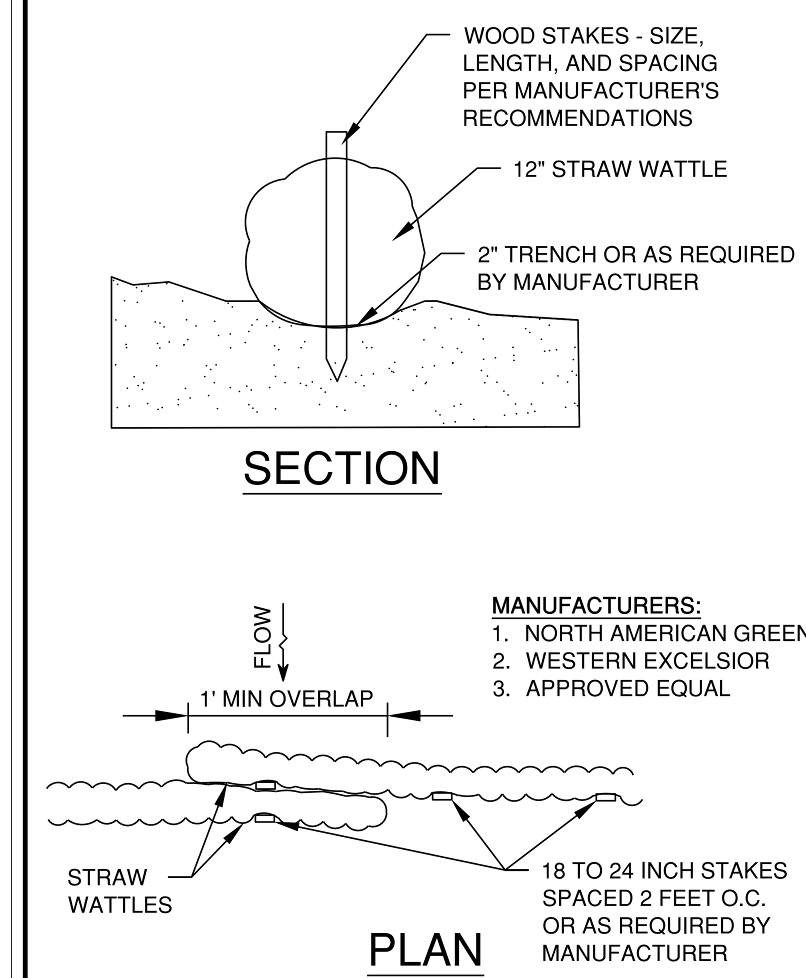

MANUFACTURERS:
1. NORTH AMERICAN GREEN
2. WESTERN EXCELSIOR
3. APPROVED EQUAL

C4 STRAW WATTLES
N.T.S.

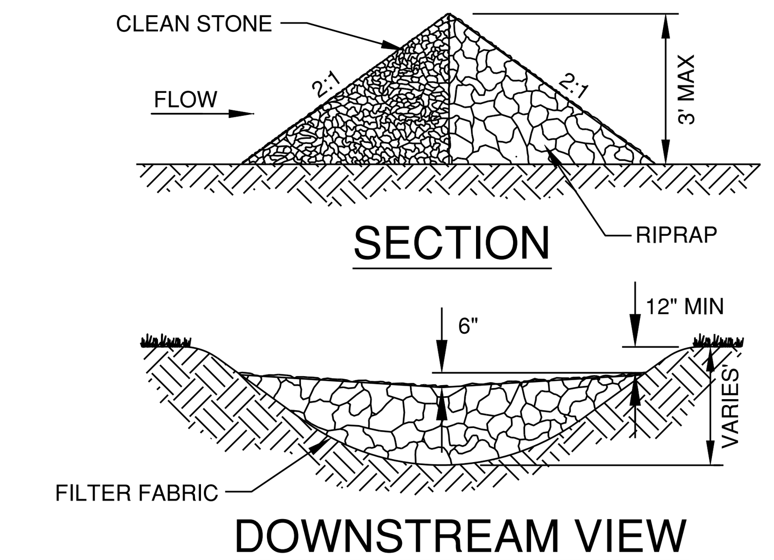

L = THE DISTANCE SUCH THAT POINT A AND B ARE OF EQUAL ELEVATIONS. MAXIMUM SPACING BETWEEN CHECK DAMS (OR AS OTHERWISE SHOWN ON THE PLAN)

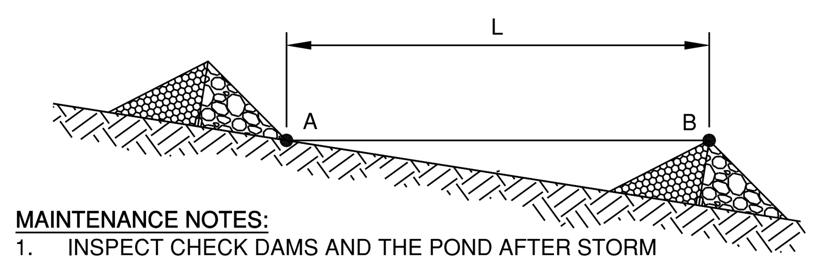

MAINTENANCE NOTES:
1. INSPECT CHECK DAMS AND THE POND AFTER STORM EVENT, AND REPAIR ANY DAMAGE IMMEDIATELY.
2. REMOVE SEDIMENT ACCUMULATED BEHIND EACH DAM AS NEEDED TO MAINTAIN POND CAPACITY, AND TO PREVENT LARGE FLOWS FROM DISPLACING SEDIMENT.
3. ADD ROCK TO THE DAMS AS NEEDED TO MAINTAIN DESIGN HEIGHT AND CROSS SECTION.
4. UPON STABILIZATION, REMOVE ROCK CHECK DAM.

NOTES:
1. CLEAN STONE SHALL MEET IDOT CA-1, CA-2, CA-3, OR CA-4.
2. RIPRAP SHALL MEET IDOT RR-3 OR RR-4 GRADATION.

C5 ROCK CHECK DAM
N.T.S.

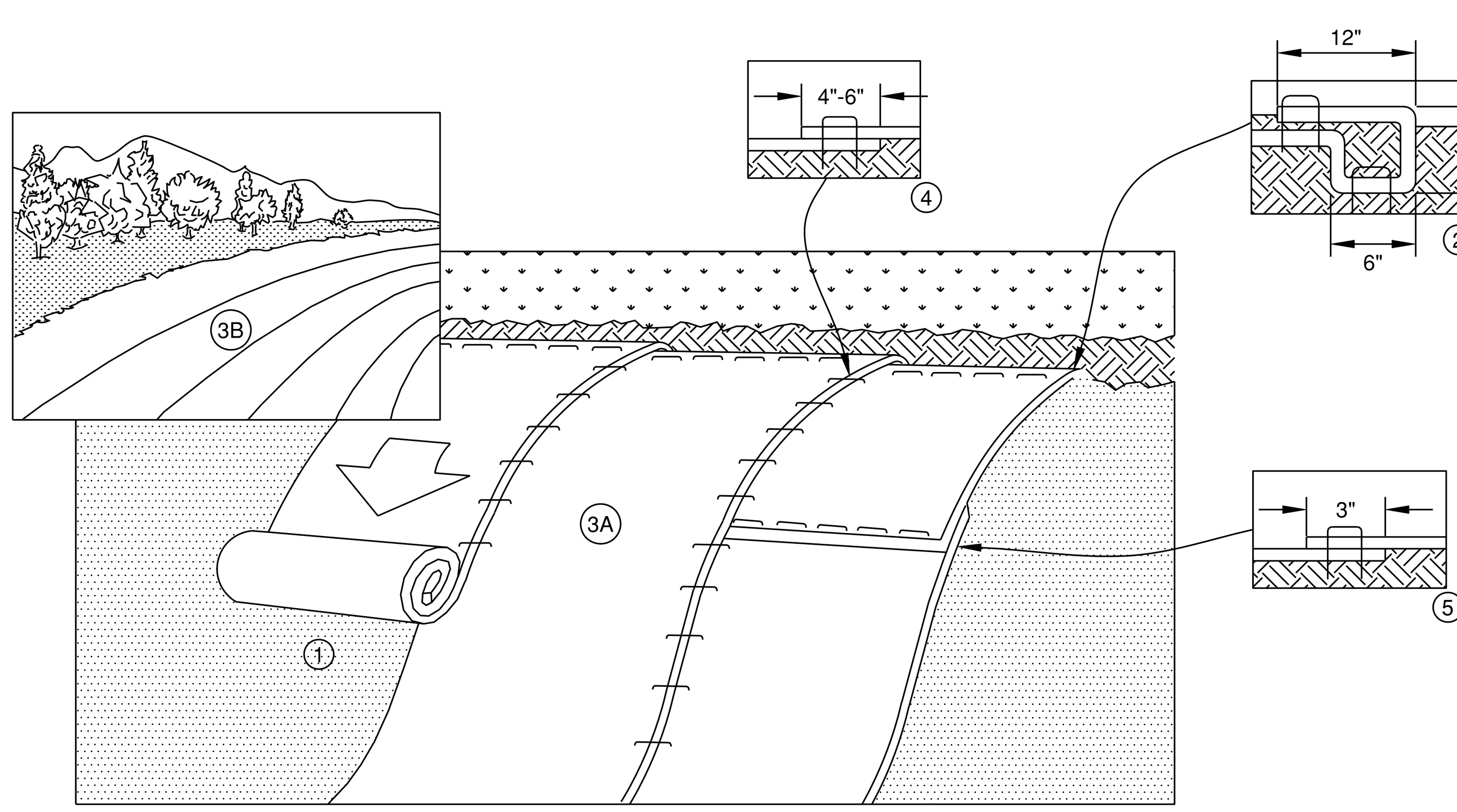

INSTALLATION NOTES:
1. PREPARE SOIL BEFORE INSTALLING BLANKETS, INCLUDING ANY NECESSARY APPLICATION OF LIME, FERTILIZER, AND SEED.
2. BEGIN AT THE TOP OF THE SLOPE BY ANCHORING THE BLANKET IN A 6" DEEP X 6" WIDE TRENCH WITH APPROXIMATELY 12" OF BLANKET EXTENDED BEYOND THE UP-SLOPE PORTION OF THE TRENCH. ANCHOR THE BLANKET WITH A ROW OF STAPLES/STAKES APPROXIMATELY 12" APART IN THE BOTTOM OF THE TRENCH. BACKFILL AND COMPACT THE TRENCH AFTER STAPLING. APPLY SEED TO COMPACTED SOIL AND FOLD REMAINING 12" PORTION OF BLANKET BACK OVER SEED AND COMPACTED SOIL. SECURE BLANKET OVER COMPACTED SOIL WITH A ROW OF STAPLES/STAKES SPACED APPROXIMATELY 12" APART ACROSS THE WIDTH OF THE BLANKET.
3. ROLL THE BLANKETS (A.) DOWN OR (B.) HORIZONTALLY ACROSS THE SLOPE. BLANKETS WILL UNROLL WITH APPROPRIATE SIDE AGAINST THE SOIL SURFACE. ALL BLANKETS MUST BE SECURELY FASTENED TO SOIL SURFACE BY PLACING STAPLES/STAKES IN APPROPRIATE LOCATIONS AS PER MANUFACTURERS RECOMMENDATION.
4. THE EDGES OF PARALLEL BLANKETS MUST BE STAPLED WITH APPROXIMATELY 4"-6" OVERLAP DEPENDING ON BLANKET TYPE. TO ENSURE PROPER SEAM ALIGNMENT, PLACE THE EDGE OF THE OVERLAPPING BLANKET (BLANKET BEING INSTALLED ON TOP) EVEN WITH THE SEAM STITCH ON THE PREVIOUSLY INSTALLED BLANKET.
5. CONSECUTIVE BLANKETS SPLICED DOWN THE SLOPE MUST BE PLACED END OVER END (SHINGLE STYLE) WITH AN APPROXIMATE 3"OVERLAP. STAPLE THROUGH OVERLAPPED AREA, APPROXIMATELY 12" APART ACROSS ENTIRE BLANKET WIDTH.
6. PLACE STAPLES/STAKES PER MANUFACTURER'S RECOMMENDATION FOR THE APPROPRIATE SLOPE BEING APPLIED.
7. IN LOOSE SOIL CONDITIONS, THE USE OF STAPLE OR STAKE LENGTHS GREATER THAN 6" MAY BE NECESSARY TO PROPERLY SECURE THE BLANKETS.
8. FOR PRODUCT SELECTION, SEE SITE SPECIFICATIONS.

A1 EROSION CONTROL BLANKET
N.T.S.

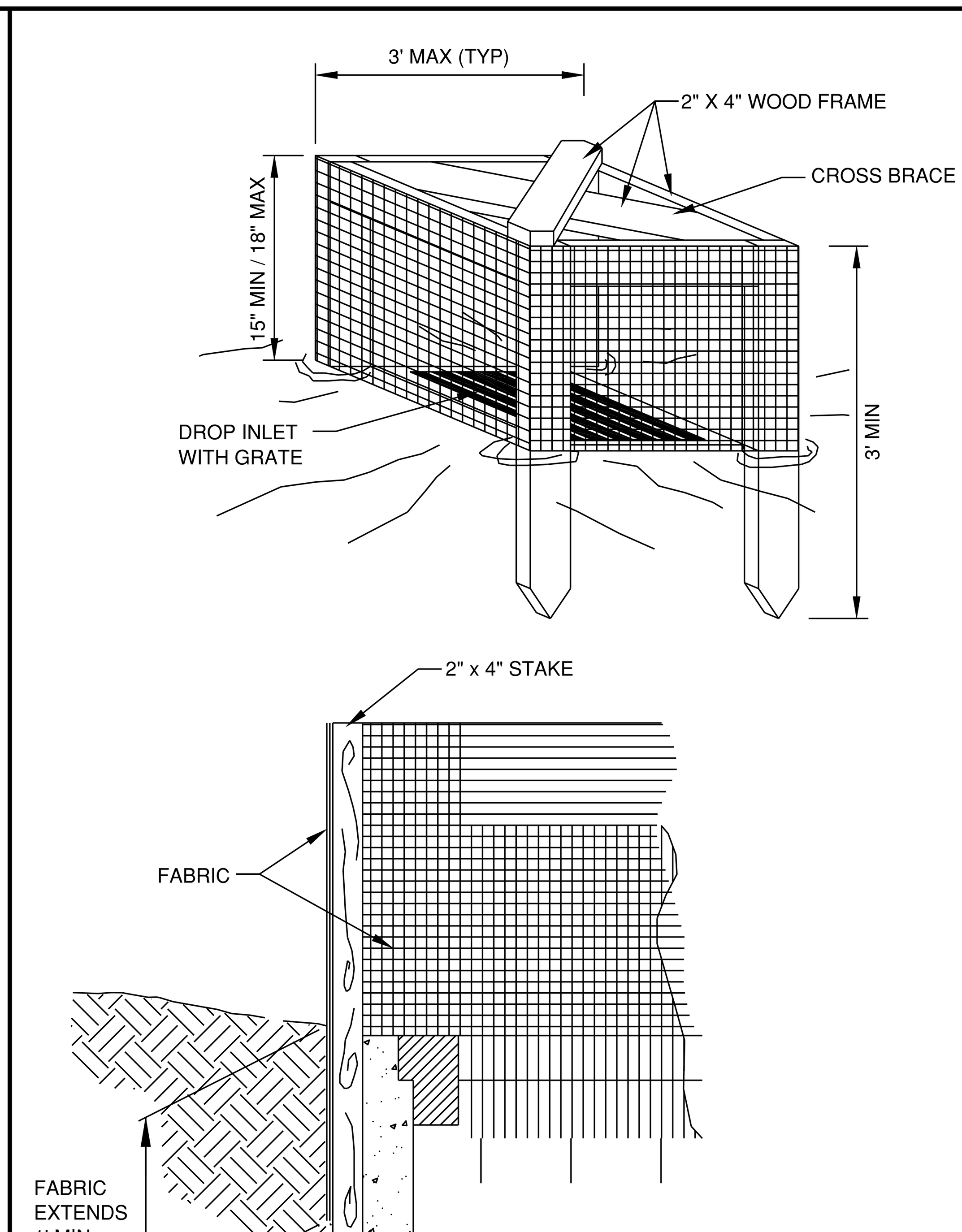

NOTES:
1. INSPECT THE FABRIC AFTER EACH RAIN AND MAKE REPAIRS AS NEEDED.
2. SEDIMENT DEPOSITS SHOULD BE REMOVED AFTER EACH RAINFALL TO PROVIDE ADEQUATE STORAGE VOLUME FOR THE NEXT RAIN. THE SEDIMENT MUST BE REMOVED WHEN THE LEVEL OF DEPOSITION REACHES APPROXIMATELY ONE-HALF THE HEIGHT OF THE BARRIER.

A3 SILT FENCE INLET PROTECTION
N.T.S.

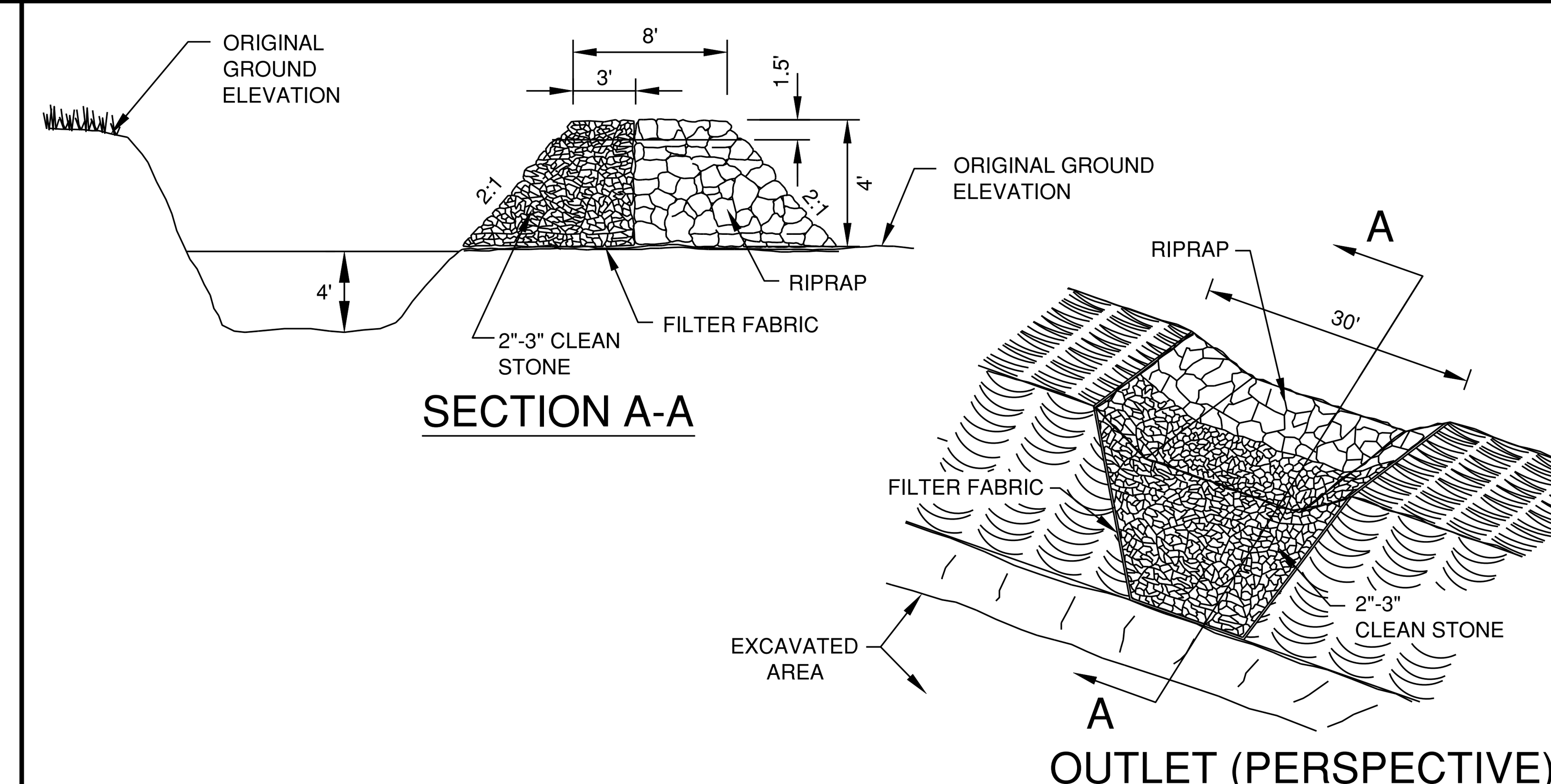

B4 TEMPORARY SEDIMENT TRAP
N.T.S.

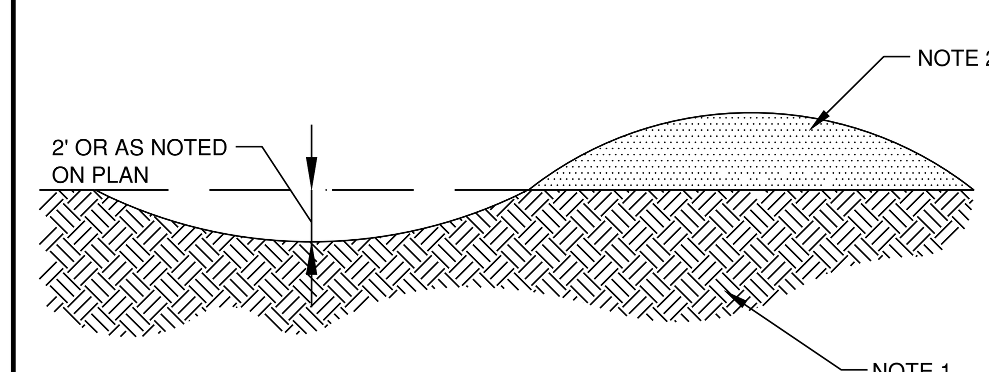

NOTES:
1. REMOVE ANY EXISTING VEGETATION AND SCARIFY OR BENCH ADJACENT SOILS PRIOR TO PLACING BERM.
2. BERM MATERIALS MUST BE ADEQUATELY COMPACTED AND STABILIZED. BERMS THAT REMAIN FOR FINAL GRADING SHALL MEET SITE SPECS FOR FILL. BERM SHALL NOT BE CONSTRUCTED OF TOPSOIL.
3. 0.3% MIN LONGITUDINAL SLOPE

A4 TEMPORARY DIVERSION DITCH
N.T.S.

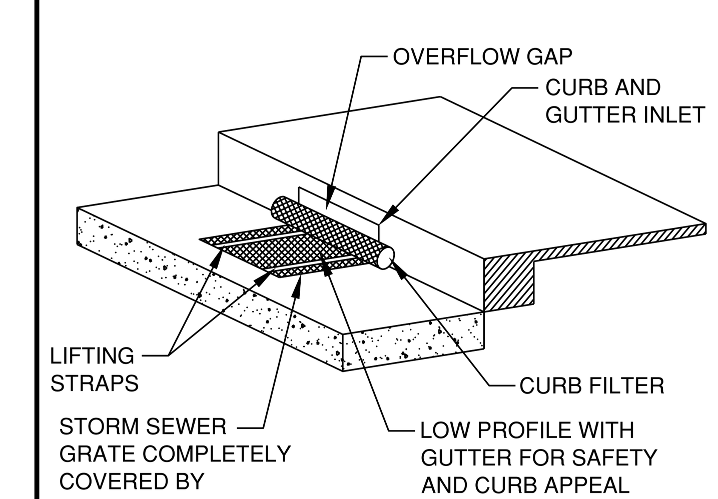

A5 DANDY CURB BAG
N.T.S.

CMT

License No. 184-000613

CONSULTANTS

MAY 2015

CSO SATELLITE
TREATMENT FACILITY
CONTRACT NO. 1

OWNER

MATTOON
MATTOON, ILLINOIS: *Working Together to Build the Future*

CITY OF MATTOON

MATTOON, ILLINOIS

MARK	DATE	DESCRIPTION

PROJECT NO:	12078-03-00
CAD DWG FILE:	120780300-C-301 EROSION DETAILS.DWG
DESIGNED BY:	SCR
DRAWN BY:	SCR
CHECKED BY:	SCR
APPROVED BY:	[signature]

COPYRIGHT: CRAWFORD, MURPHY & TILLY, INC. 2015

SHEET TITLE

EROSION CONTROL DETAILS

C-301

Path: J:\Mattoon\12078-03\Draw\Sheets\1-CSO Satellite Treatment\120780300-C-301 EROSION DETAILS.dwg
Date: Wednesday, June 17, 2015 11:46:28 AM

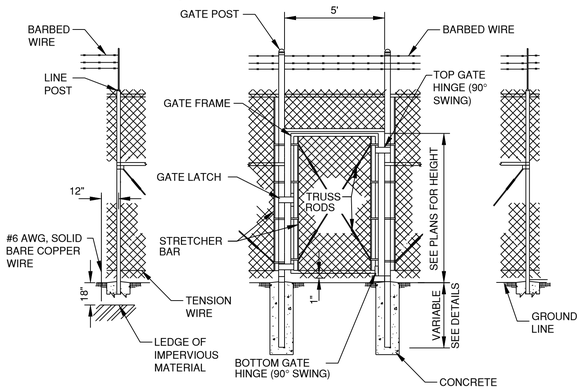

PEDESTRIAN GATE ARRANGEMENT

N.T.S.

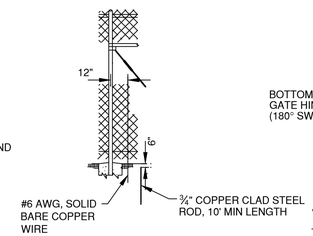

STANDARD GROUND

N.T.S.

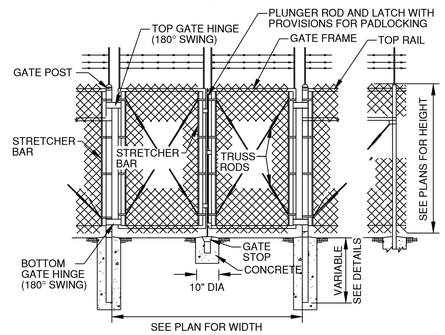

NOTE : ALL GATES 10' OR LONGER SHALL INCLUDE SUPPORT WHEELS AT THE FREE END.

VEHICLE GATE ARRANGEMENT

N.T.S.

PROTECTIVE ELECTRICAL GROUNDS

CONTINUOUS FENCE SHALL BE GROUNDED AT INTERVALS NOT EXCEEDING 500 FT. IN URBAN AREAS AND 1000 FT. IN RURAL AREAS. THERE SHALL BE A GROUND WITHIN 100 FT. OF GATES IN EACH SECTION OF THE FENCE ADJACENT TO THE GATE. FENCE UNDER A POWER LINE SHALL BE GROUNDED BY THREE GROUNDS. ONE GROUND DIRECTLY UNDER THE CROSSING AND ONE GROUND ON EACH SIDE. 25 TO 50 FT. AWAY. A SINGLE GROUND SHALL BE LOCATED DIRECTLY UNDER EACH TELEPHONE WIRE OR CABLE CROSSING. THE COUNTERPOISE GROUND SHALL BE USED ONLY WHERE IT IS IMPOSSIBLE TO DRIVE A GROUND ROD. THE GROUND WIRE SHALL BE CONNECTED TO THE FABRIC AND THE GROUND ROD BY A MECHANICAL CLAMP OF CAST BRONZE BODY AND BRONZE OR STAINLESS STEEL BOLTS AND WASHERS.

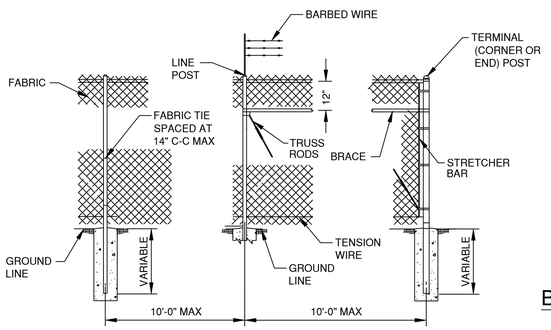

LINE POST ARRANGEMENT

N.T.S.

CORNER OR END POST ARRANGEMENT

N.T.S.

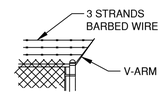

BARBED WIRE- 3 STRANDS, 12-1/2" GAUGE WIRE WITH 14 GAUGE 4 POINT BARBS SPACED APPROXIMATELY 5 INCHES APART. ALL WIRE SHALL BE ALUMINUM COATED WITH A MINIMUM COATING OF 0.25 OUNCES PER SQUARE FOOT OF SURFACE AREA.

BARBED WIRE DETAIL

N.T.S.

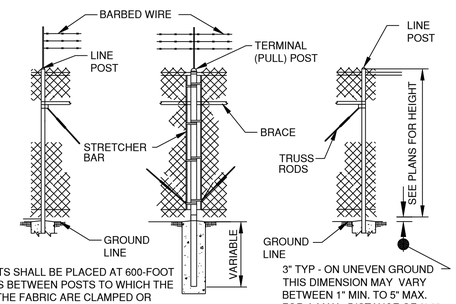

NOTE:
PULL POSTS SHALL BE PLACED AT 600-FOOT INTERVALS BETWEEN POSTS TO WHICH THE ENDS OF THE FABRIC ARE CLAMPED OR MIDWAY BETWEEN SUCH POSTS WHEN THE DISTANCE IS LESS THAN 1320' AND GREATER THAN 660'.

3" TYP - ON UNEVEN GROUND THIS DIMENSION MAY VARY BETWEEN 1" MIN. TO 5" MAX. FOR A MAX DISTANCE OF 8'-0"

PULL POST ARRANGEMENT

N.T.S.

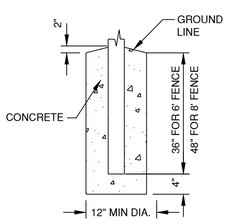

FOOTING FOR LINE POST

N.T.S.

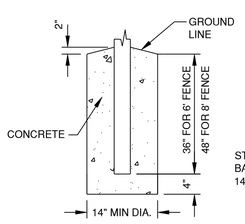

FOOTING FOR GATE & TERMINAL POST

N.T.S.

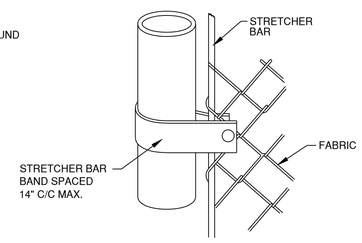

METHOD OF FASTENING STRETCHER BAR TO POST

N.T.S.

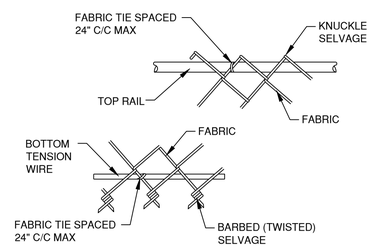

METHOD OF TYING FABRIC TO TENSION WIRES

N.T.S.

LINE POSTS -	SIZES & WEIGHTS
SECTION	LBS./LIN. FEET
PIPE TYPE I 2.375" O.D.	3.65
PIPE TYPE II 2.375" O.D.	3.12
PIPE TYPE C 2.375" O.D.	2.64

TERMINAL POSTS-	SIZES & WEIGHTS
SECTION	LBS./LIN. FEET
PIPE TYPE I 2.875" O.D.	5.79
PIPE TYPE II 2.875" O.D.	4.64

GATE FRAMES	SIZES & WEIGHTS
SECTION	LBS./LIN. FEET
PIPE - 1.90" O.D.	2.28

HOIZONTAL BRACES	SIZES & WEIGHTS
SECTION	LBS./LIN. FEET
PIPE TYPE I 1.66" O.D.	2.27
PIPE TYPE II 1.66" O.D.	1.83

GATE POSTS ——— SIZES & WEIGHTS							
		PIPE					
SINGLE	DOUBLE	SIZE	LBS./LIN. FT.	SIZE	LBS./LIN. FT.	SIZE	LBS./LIN. FT.
UP TO 4 FT.	UP TO 8 FT.	2.875" O.D.	4.64				
OVER 4 FT. TO 8 FT.	OVER 8 FT. TO 16 FT.	4.00" O.D.	8.65				
OVER 8 FT. TO 12 FT.	OVER 16 FT. TO 24 FT.	4.00" O.D.	8.65				

A2 CHAIN-LINK FENCE

N.T.S.

CRITICAL DIMENSION CHART			
A	CLEAR OPENING	28'-0"	36'-0"
B	COUNTERBALANCE POST SPACING	13'-1"	17'-1"
C	OVERALL GATE LENGTH	42'-0"	54'-0"
D	COUNTERBALANCE LENGTH	14'-0"	18'-0"
E	NOMINAL GATE HEIGHT	6'-0"	6'-0"
F	POST HEIGHT (WITH BARB ARMS)	7'-6"	7'-6"
G	FABRIC HEIGHT	5'-0"	5'-0"

DIRECTION OF GATE OPERATION IS DICTATED BY TOPOGRAPHY AND OTHER SITE OBSTRUCTIONS. SEE PLANS FOR GATE SIZE AND DIRECTION OF OPERATION.

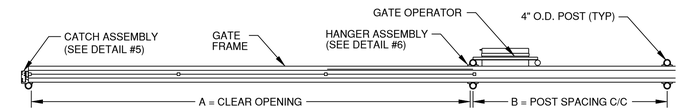

1 PLAN VIEW

N.T.S.

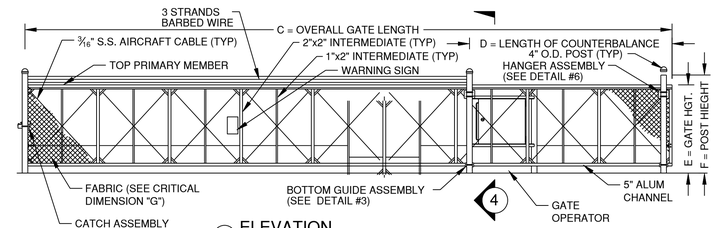

2 ELEVATION

N.T.S.

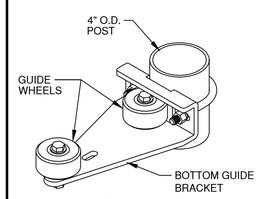

3 BOTTOM GUIDE

N.T.S.

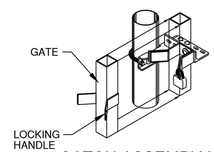

5 CATCH ASSEMBLY

N.T.S.

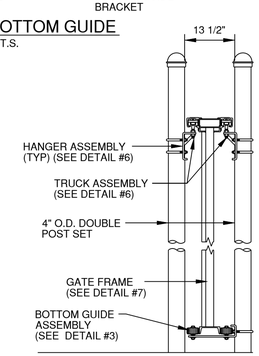

4 ASSEMBLY SECTION

N.T.S.

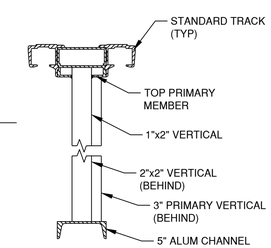

7 GATE FRAME SECTION

N.T.S.

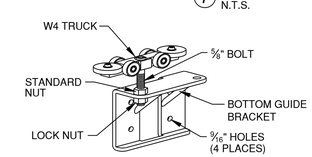

6 GATE HANGER ASSEMBLY

N.T.S.

UL 235 COMPLIANCE NOTES

GATE INSTALLATION SHALL COMPLY WITH ALL REQUIREMENTS OF UL 235, INCLUDING, BUT NOT LIMITED TO:

1. ALL OPENINGS OF THE SLIDE GATE ARE GUARDED OR SCREENED FROM THE BOTTOM OF THE GATE TO A MINIMUM OF 4 FEET ABOVE GROUND TO PREVENT A 2-1/4" DIAMETER SPHERE FROM PASSING THROUGH THE OPENINGS ANYWHERE IN THE GATE, AND IN THAT PORTION OF THE ADJACENT FENCE THAT THE GATE COVERS IN THE OPEN POSITION.
2. ALL EXPOSED PINCH POINTS ARE ELIMINATED OR GUARDED AND GUARDING IS SUPPLIED FOR ALL EXPOSED ROLLERS.
3. A WARNING SIGN (SEE DETAIL, THIS SHEET) MUST BE AFFIXED TO BOTH SIDES OF THE SLIDE GATE.
4. FOR ADDITIONAL UL 235 REQUIREMENTS FOR THIS GATE INSTALLATION, SEE GATE OPERATOR DETAILS SHEET.

GATE DETAIL NOTES:

1. ALL FITTINGS STANDARDLY PROVIDED FOR 4" O.D. POSTS. OTHER SIZES ARE AVAILABLE UPON REQUEST.
2. FOR GATES THAT REQUIRE FABRICATION IN TWO PIECES, A 5" ALUM. CHANNEL WILL BE SUBSTITUTED FOR THE 2" x 5" ALUM. TUBE BOTTOM MEMBER.

GENERAL GATE NOTES:

1. SLIDING GATE SYSTEM SHALL BE FORTRESS STRUCTURAL GATE AS MANUFACTURED BY TYMETAL CORP., GREENWICH, NY, 1-800-328-4283, OR APPROVED EQUAL.
2. CONTRACTOR SHALL SUBMIT FOR APPROVAL SHOP DRAWINGS SHOWING COMPLETE DETAILS OF GATE CONSTRUCTION, DIMENSIONS, POSTS AND UNIT WEIGHTS OF STRUCTURAL COMPONENTS.

A4 CHAIN-LINK SLIDE GATE

N.T.S.

CMT

License No. 184-000613

CONSULTANTS

MAY 2015

CSO SATELLITE TREATMENT FACILITY CONTRACT NO. 1

OWNER

MATTOON

MATTOON, ILLINOIS: *Working Together to Build the Future*

CITY OF MATTOON

MATTOON, ILLINOIS

MARK	DATE	DESCRIPTION

PROJECT NO:	12078-03-00
CAD DWG FILE:	120780300-C-302-309 CONST DETAILS.DWG
DESIGNED BY:	SCR
DRAWN BY:	SCR
CHECKED BY:	SCR
APPROVED BY:	

COPYRIGHT: CRAWFORD, MURPHY & TILLY, INC. 2015

SHEET TITLE

CONSTRUCTION DETAILS - 1

C-302

SHEET 18 OF 128

Path: J:\Mattoon\12078-03\Draw\Sheets\1-CSO Satellite Treatment\120780300-C-302-309 CONST DETAILS.dwg
Date: Wednesday, June 17, 2015 11:46:46 AM

GENERAL NOTES

1. TRENCH EXCAVATIONS SHALL BE PROTECTED IN ACCORDANCE WITH APPLICABLE FEDERAL, STATE, AND LOCAL REGULATIONS, LAWS, AND RULES; BUT SHALL NOT BE LESS THAN THE STANDARDS AND REGULATIONS ESTABLISHED BY OSHA IN 29 CFR PART 1926.
2. IF THE CONTRACTOR ELECTS TO CONSTRUCT THE TRENCH WITH SLOPED OR BENCHED SIDES IN LIEU OF SHORING, NO ADDITIONAL COMPENSATION WILL BE ALLOWED FOR THE TRENCH BACKFILL MATERIAL REQUIRED OUTSIDE THE VERTICAL LIMITS OF THE SPECIFIED TRENCH WIDTH.
3. HAUNCHING AND BACKFILL MATERIALS DISTURBED BY MOVING OR REMOVING ANY TRENCH SHORING SHALL BE REMOVED, REPLACED, AND RECOMPACTED IN ACCORDANCE WITH THE PROJECT SPECIFICATIONS AND THIS DETAIL.
4. TRENCH BOTTOM SHALL BE EXCAVATED AND PREPARED TO PROVIDE UNIFORM, STABLE SUPPORT OF THE PIPE. RELIEF CUTS SHALL BE MADE AT PIPE BELLS, FITTINGS, AND COUPLINGS.
5. TRENCH SHALL BE DEWATERED UNTIL BACKFILL HAS BEEN PLACED TO PREVENT SOFTENING OF FOUNDATION AND TO PREVENT BOUYANT FORCES FROM DEFLECTING PIPE ALIGNMENT AND GRADE. DEWATERING SHALL BE IMPLEMENTED AT NO ADDITIONAL COST TO THE OWNER.
6. ALL FILL MATERIALS SHALL BE IDOT CLASS A FINE OR COARSE AGGREGATES WITH GRADATION AS SPECIFIED. FILL MATERIALS SHALL BE PLACED AT OR NEAR OPTIMUM MOISTURE CONTENT TO ACHIEVE SPECIFIED COMPACTION.
7. NATIVE SOIL SALVAGED FROM TRENCH EXCAVATION SHALL BE FREE OF NON-SOIL DEBRIS, ORGANICS, AND ROCKS LARGER THAN 3". FILL SHALL NOT EXCEED THE ALLOWABLE MOISTURE CONTENT PER SITE SPECIFICATIONS.
8. FOUNDATION SHALL BE UNDISTURBED, NATIVE SOIL OR ENGINEERED FILL COMPACTED TO 97% STD PROCTOR. WHERE NATIVE SOIL IS SOFT, SPONGY OR OTHERWISE UNSUITABLE, THE UNSUITABLE SOIL SHALL BE UNDERCUT AND REPLACED WITH UP TO 12" OF COMPACTED CA7. FOR UNDERCUT DEPTHS GREATER THAN 12", THE REPLACEMENT SHALL BE 12" OF CA7 CAPPED WITH CA6 COMPACTED TO 97% STD PROCTOR. THE CA6 SHALL BE PLACED IN 8" LOOSE LIFTS.
9. HAUNCHING SHALL BE WORK AROUND THE PIPE BY HAND TO ELIMINATE VOIDS UNDERNEATH THE PIPE.
10. SEE THE BACKFILL MATERIALS TABLE FOR ALLOWABLE BEDDING, HAUNCHING, AND BACKFILL MATERIAL AND THE REQUIRED STANDARD PROCTOR COMPACTIVE EFFORT. PIPE CLASSIFICATIONS SHALL BE AS FOLLOWS:

    FLEXIBLE PIPE: PVC, CPVC, GFRPM, HDPE, POLYETHYLENE, POLYPROPYLENE
    SEMI-RIGID PIPE: CAST IRON, DUCTILE IRON, STEEL, COPPER
    RIGID: RCP

11. **AT PIPE CROSSING LOCATIONS, THE BEDDING, HAUNCHING, INITIAL BACKFILL AND FINAL BACKFILL OF THE LOWER PIPE TRENCH SHALL MEET THE REQUIREMENTS OF TRENCH BACKFILL UNDER PAVEMENT IN ORDER TO PROVIDE A SOLID FOUNDATION FOR THE UPPER PIPE.**

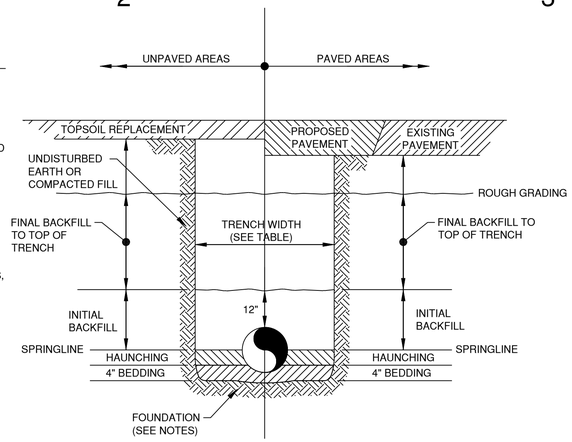

TRENCH WIDTH	
TRENCH DEPTH/PROTECTION	REQUIRED TRENCH WIDTH ON EACH SIDE OF THE PIPE
5' AND LESS, WITHOUT SHORING	12"
5' AND LESS WITH SHORING	12"
GREATER THAN 5'	18"

BACKFILL MATERIALS				
PIPE CLASS - LOCATION	BEDDING*	HAUNCHING**	INITIAL BACKFILL***	FINAL BACKFILL***
FLEXIBLE - WITHIN 5' OF PVMNT	CA6,CA7,FA1,FA2,FA5,FA6 @ 97%	CA6,CA7,FA1,FA2,FA5,FA6 @ 97%	CA6,CA7,FA1,FA2,FA5,FA6 @ 97%	CA6,CA7,FA1,FA2,FA5,FA6 @ 97%
FLEXIBLE - 5' OUTSIDE PVMNT	CA6,CA7,FA1,FA2,FA5,FA6 @ 97%	CA6,CA7,FA1,FA2,FA5,FA6 @ 90%	CA6,CA7,FA1,FA2,FA5,FA6 @ 90%	NATIVE SOIL @ 90%
SEMI-RIGID - WITHIN 5' OF PVMNT	FA1,FA2,FA5,FA6 @ 97%	FA1,FA2,FA5,FA6 @ 97%	FA1,FA2,FA5,FA6 @ 97%	FA1,FA2,FA5,FA6 @ 97%
SEMI-RIGID - 5' OUTSIDE PVMNT	NATIVE SOIL	NATIVE SOIL @ 90%	NATIVE SOIL @ 90%	NATIVE SOIL @ 90%
RIGID - WITHIN 5' OF PVMNT	CA6,CA7,FA1,FA2,FA5,FA6 @ 97%	CA6,CA7,FA1,FA2,FA5,FA6 @ 97%	CA6,CA7,FA1,FA2,FA5,FA6 @ 97%	CA6,CA7,FA1,FA2,FA5,FA6 @ 97%
RIGID - 5' OUTSIDE PVMNT	CA6,CA7,FA1,FA2,FA5,FA6 @ 97%	CA6,CA7,FA1,FA2,FA5,FA6 @ 90%	NATIVE SOIL @ 90%	NATIVE SOIL @ 90%

NOTES:
* BEDDING SHALL HAVE A MINIMUM THICKNESS OF 4".
** HAUNCHING SHALL BE PLACED IN COMPACTED LIFTS NOT EXCEEDING 6"
*** INITIAL & FINAL BACKFILL SHALL BE PLACED AND COMPACTED IN LIFTS NOT EXCEEDING 8"

C2 PIPE TRENCH BACKFILL
N.T.S.

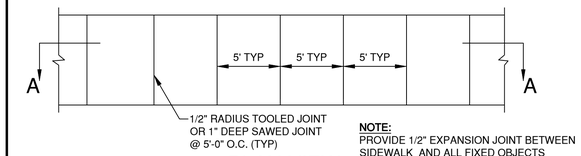

NOTE:
PROVIDE 1/2" EXPANSION JOINT BETWEEN SIDEWALK AND ALL FIXED OBJECTS

PLAN VIEW

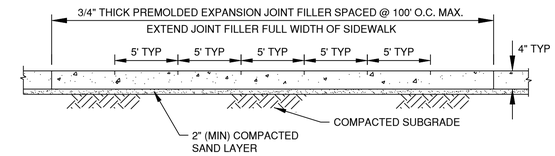

SECTION A-A

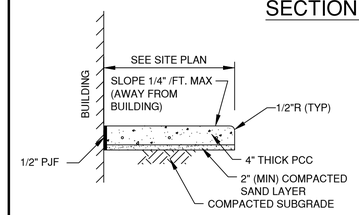

SECTION AT BUILDING

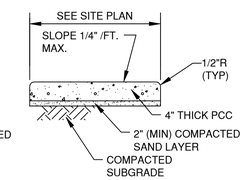

TYPICAL SECTION

C4 PCC SIDEWALK
N.T.S.

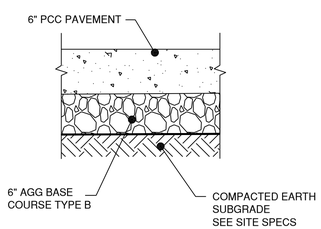

CONCRETE PAVEMENT

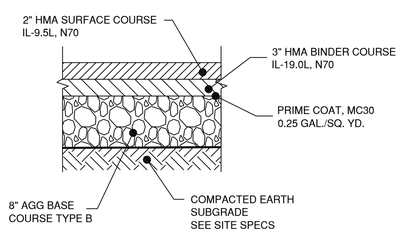

ASPHALT PAVEMENT

NOTES

1. ALL WORK SHALL MEET OR EXCEED THE ILLINOIS DEPARTMENT OF TRANSPORTATION STANDARD SPECIFICATIONS FOR ROAD & BRIDGE CONSTRUCTION, LATEST EDITION AND PROJECT SPECIFICATION SECTIONS 02740 AND 02751.
2. TYPES AND LOCATIONS OF PAVEMENT JOINTS SHALL CONFORM TO PROJECT SPECIFICATION SECTION 02751 AND AS DETAILED.

A1 TYPICAL PAVEMENT SECTIONS
N.T.S.

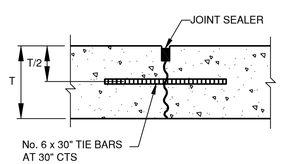

NOTES

1. ALL TIE BARS SHALL AND MESH SHALL BE SECURELY HELD IN PLACE BY SUPPORT PINS OR OTHER APPROVED METHODS TO PREVENT SHIFTING DURING AND AFTER CONCRETE PLACEMENT.
2. TIE BARS SHALL BE DEFORMED BARS IN CONFORMANCE WITH IDOT SPECIFICATIONS.

A4 SAWCUT CONTRACTION JOINT
N.T.S.

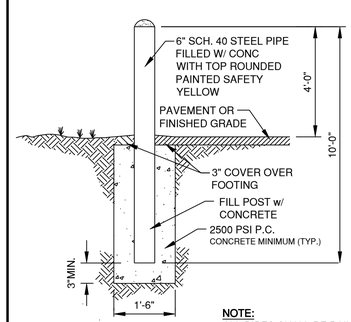

NOTE:
ALL PIPES SHALL BE PAINTED TRAFFIC YELLOW WITH EPOXY PAINT

A5 PIPE BOLLARD
N.T.S.

CMT

License No. 184-000613
CONSULTANTS

MAY 2015

CSO SATELLITE TREATMENT FACILITY CONTRACT NO. 1

OWNER

MATTOON
MATTOON, ILLINOIS: *Working Together to Build the Future*

CITY OF MATTOON

MATTOON, ILLINOIS

MARK	DATE	DESCRIPTION

PROJECT NO:	12078-03-00
CAD DWG FILE:	120780300-C-302-309 CONST DETAILS.DWG
DESIGNED BY:	SCR
DRAWN BY:	SCR
CHECKED BY:	SCR
APPROVED BY:	TRB

COPYRIGHT: CRAWFORD, MURPHY & TILLY, INC. 2015

SHEET TITLE
CONSTRUCTION DETAILS - 2

C-303
SHEET 19 OF 128

Path: J:\Mattoon\12078-03\Draw\Sheets\1-CSO Satellite Treatment\120780300-C-302-309 CONST DETAILS.dwg
Date: Wednesday, June 17, 2015 11:46:48 AM

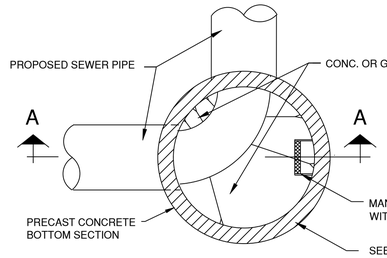

NOTE :
ADDITIONAL REQUIREMENTS FOR MANHOLE CASTINGS, AND RESILIENT SEAL AROUND PIPE ARE IN THE SPECIFICATIONS. FOR CONNECTING EXISTING SEWERS TO PROPOSED MANHOLES, SEE SPECS.

PLAN
N.T.S.

MANHOLE TYPE	INSIDE DIA.	MIN. WALL THICKNESS
A-4	4'-0"	5"
A-5	5'-0"	6"

NOTE:
INVERT FLOWLINE AT BENDS SHALL HAVE A RADIUS EQUAL TO OR LARGER THAN THE PIPE DIAMETER.

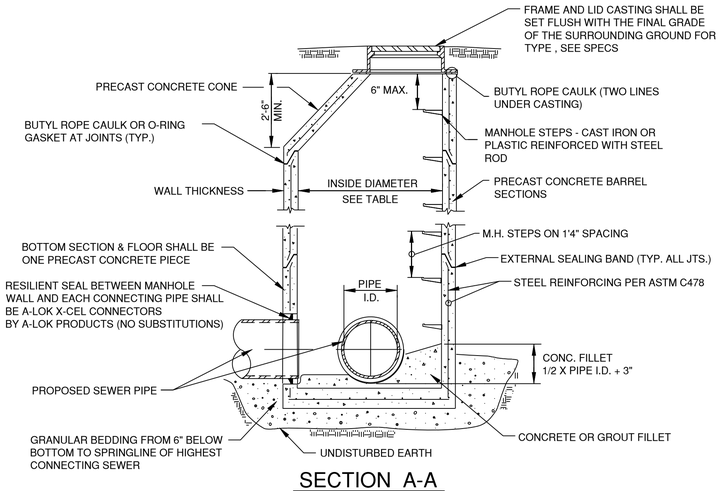

SECTION A-A

LEAKAGE TESTING

LEAKAGE TESTING OF ALL SANITARY SEWER MANHOLES SHALL BE PERFORMED IN ACCORDANCE WITH ASTM C1244 OR C969.

C1 SANITARY SEWER MANHLE - TYPE A
N.T.S.

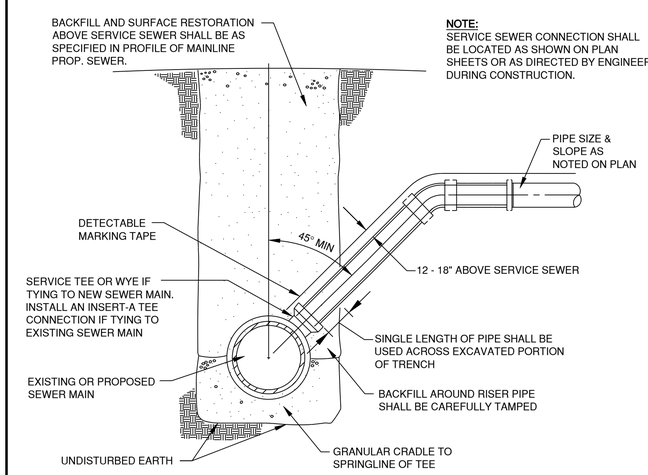

NOTE:
SERVICE SEWER CONNECTION SHALL BE LOCATED AS SHOWN ON PLAN SHEETS OR AS DIRECTED BY ENGINEER DURING CONSTRUCTION.

C4 SERVICE SEWER CONNECTION
N.T.S.

NOTE:
TO BE USED IN CONJUNCTION WITH TYPE A MANHOLES WHERE SEWER ENTERS 2'-0" OR MORE ABOVE LOWEST INVERT. NOT TO BE USED FOR INLET OR CATCH BASIN CONNECTION.

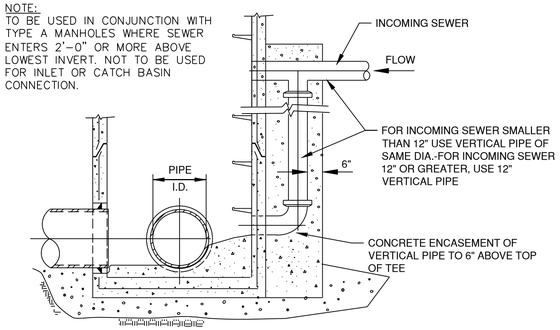

B1 DROP MANHOLE CONNECTION
N.T.S.

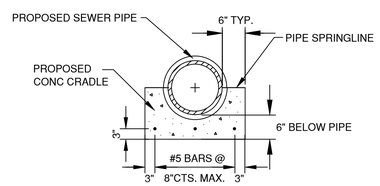

CONCRETE CRADLE

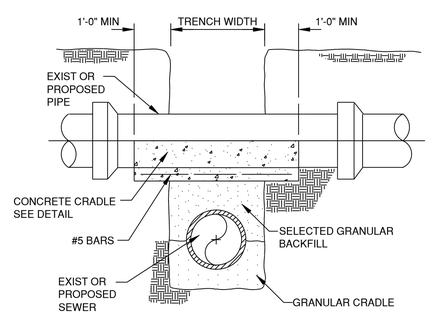

A2 POURED PIPE SUPPORT
N.T.S.

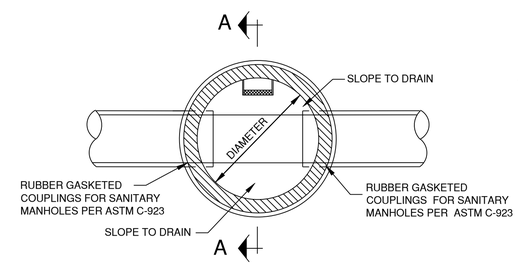

PLAN

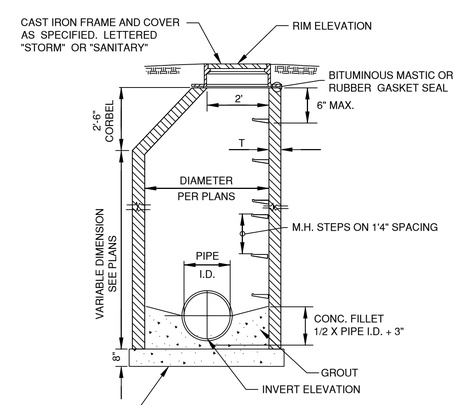

SECTION A-A

BOTTOM SLAB:
3500 PSI CONCRETE OR PRECAST REINFORCED CONCRETE SLAB ON 6" SAND CUSHION BOTTOM SLAB, MAY BE PRECAST MONOLITHIC WITH MANHOLE WALL SECTION

ALTERNATE MATERIALS FOR WALLS	D	C	T (min)
PRECAST REINFORCED CONCRETE SECTION	(4'-0") (5'-0")	(30) (3'-9")	(4) (5)
CAST-IN-PLACE CONCRETE	(4'-0") (5'-0")	(30) (3'-9")	(6) (6)

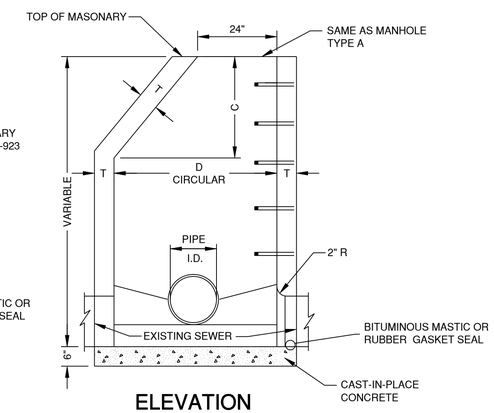

ELEVATION

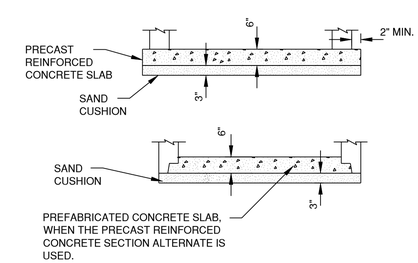

ALTERNATE BOTTOM SLAB

A4 SET-OVER MANHOLE
N.T.S.

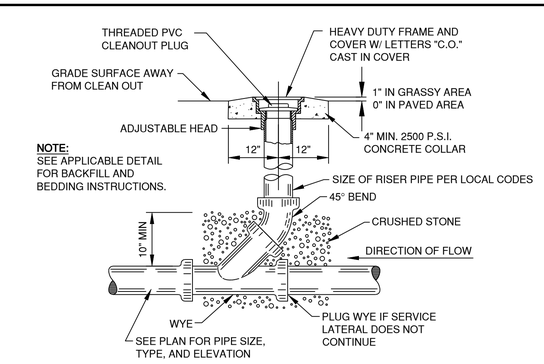

NOTE:
SEE APPLICABLE DETAIL FOR BACKFILL AND BEDDING INSTRUCTIONS.

A1 CLEANOUT
N.T.S.

CMT
License No. 184-000613
CONSULTANTS

MAY 2015

CSO SATELLITE TREATMENT FACILITY CONTRACT NO. 1

OWNER

MATTOON
MATTOON, ILLINOIS: *Working Together to Build the Future*

CITY OF MATTOON

MATTOON, ILLINOIS

MARK	DATE	DESCRIPTION

PROJECT NO:	12078-03-00
CAD DWG FILE:	120780300-C-302-309 CONST DETAILS.DWG
DESIGNED BY:	SCR
DRAWN BY:	SCR
CHECKED BY:	SCR
APPROVED BY:	
COPYRIGHT:	CRAWFORD, MURPHY & TILLY, INC. 2015

SHEET TITLE
CONSTRUCTION DETAILS - 3

C-304
SHEET 20 OF 128

Path: J:\Mattoon\12078-03\Draw\Sheets\1-CSO Satellite Treatment\120780300-C-302-309 CONST DETAILS.dwg
Date: Wednesday, June 17, 2015 11:46:51 AM

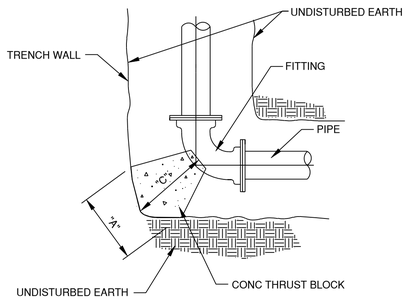

PLAN OF BEND
N.T.S.

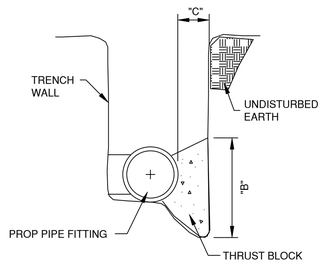

SECTION
N.T.S.

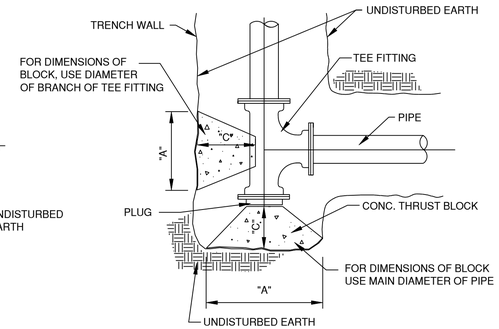

PLAN OF TEE
N.T.S.

SIZE	90° BEND			45° BEND			22-1/2° BEND			11-1/4° BEND			TEE OR PLUG		
	A	B	C	A	B	C	A	B	C	A	B	C	A	B	C
4"& 6"	2'-0"	1'-4"	9"	1'-6"	1'-0"	6"	1'-1"	0'-8"	6"	0'-9"	0'-6"	6"	2'-5"	1'-7"	1'-0"
8"	2'-8"	1'-10"	1'-0"	2'-0"	1'-4"	8"	1'-5"	1'-0"	8"	1'-0"	0'-8"	8"	3'-2"	2'-2"	1'-3"
10"	3'-4"	2'-3"	1'-3"	2'-6"	1'-8"	10"	1'-9"	1'-2"	8"	1'-3"	0'-10"	8"	4'-0"	2'-8"	1'-7"
12"	4'-0"	2'-8"	1'-6"	3'-0"	2'-0"	1'-0"	2'-2"	1'-5"	8"	1'-6"	1'-0"	8"	4'-10"	3'-2"	1'-11"
14"	4'-8"	3'-2"	1'-9"	3'-6"	2'-4"	1'-2"	2'-6"	1'-8"	8"	1'-9"	1'-2"	8"	5'-7"	3'-9"	2'-3"
16"	5'-4"	3'-7"	2'-0"	3'-11"	2'-8"	1'-4"	2'-10"	1'-11"	9"	2'-0"	1'-4"	8"	6'-4"	4'-3"	2'-6"
18"	6'-0"	4'-0"	2'-3"	4'-5"	3'-0"	1'-6"	3'-2"	2'-2"	10"	2'-3"	1'-6"	8"	7'-2"	4'-9"	2'-10"
20"	6'-8"	4'-5"	2'-6"	4'-11"	3'-4"	1'-8"	3'-6"	2'-4"	11"	2'-6"	1'-8"	8"	7'-11"	5'-4"	3'-2"
24"	8'-0"	5'-4"	3'-0"	5'-11"	3'-11"	2'-0"	4'-3"	2'-10"	1'-1"	3'-0"	2'-0"	8"	9'-6"	6'-4"	3'-9"

NOTES:

1. ALL BENDS, TEES, PLUGS, FITTINGS OR OTHER SIGNIFICANT CHANGES IN ALIGNMENT SHALL BE BRACED WITH POURED CONCRETE THRUST BLOCKS FITTINGS WITH RETAINING GLANDS WILL NOT BE ALLOWED.
2. "C' DIMENSION SHALL BE AS REQUIRED TO REACH UNDISTURBED EARTH BUT NOT LESS THAN VALUE LISTED IN TABLE.
3. DIMENSIONS "A" AND "B" ARE BASED ON INTERNAL PIPE PRESSURE OF 100 P.S.I. AND BEARING ON THE UNDISTURBED SOIL OF 1500 P.S.F.
4. "B"= HEIGHT OF THRUST BLOCK

C1 THRUST BLOCK DETAILS
N.T.S.

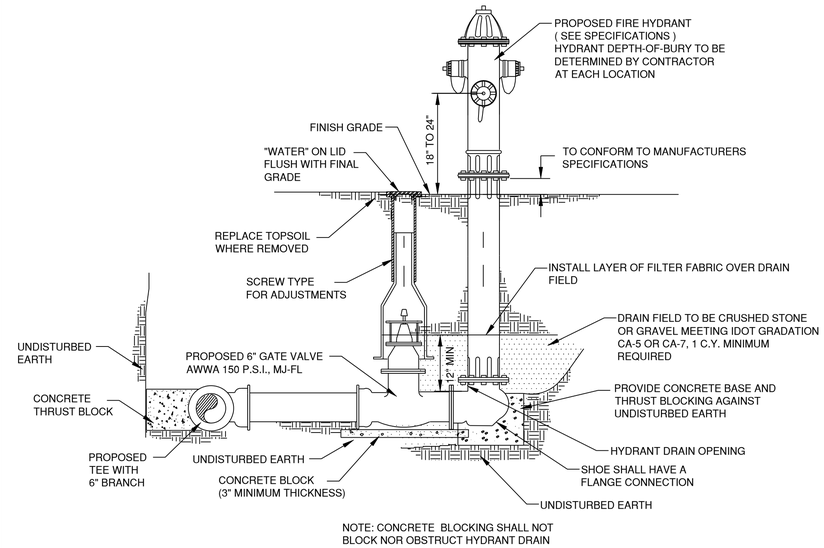

NOTE: CONCRETE BLOCKING SHALL NOT BLOCK NOR OBSTRUCT HYDRANT DRAIN

C4 FIRE HYDRANT WITH ISOLATION VALVE
N.T.S.

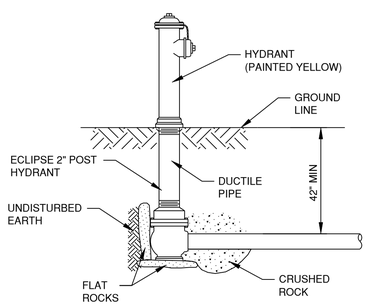

ECLIPSE NO. 2 POST HYDRANT

HYDRANTS SHALL BE SELF-DRAINING, NON-FREEZING, COMPRESSION TYPE WITH 2-3/16" MAIN VALVE OPENING. INLET CONNECTION SHALL BE (2" IP, 2-1/2" IP, 3" IP, 2" MJ OR 3" MJ). OUTLET SHALL BE (1-1/4", 1-1/2", 2" OR 2-1/2" IP OR NST).

HYDRANTS SHALL HAVE A 3" DUCTILE IRON PIPE RISER WITH A CAST IRON STOCK TOP, AND NON-TURNING OPERATING ROD. PRINCIPAL INTERIOR OPERATING PARTS SHALL BE BRASS AND REMOVABLE FROM THE HYDRANT FOR SERVICING WITHOUT EXCAVATING THE HYDRANT.

HYDRANTS SHALL BE SET IN 4 CUBIC FEET OF CRUSHED STONE TO ALLOW FOR PROPER DRAINAGE OF THE HYDRANT. RECOMMENDATIONS OF THE AWWA SHOULD BE FOLLOWED WHEN INSTALLING THE HYDRANTS.

POST HYDRANTS SHALL BE ECLIPSE NO. 2 POST HYDRANTS AS MANUFACTURED BY JOHN C. KUPFERLE FOUNDRY COMPANY, ST. LOUIS, MO.

EACH YARD HYDRANT SHALL BE INSTALLED WITH AN ISOLATION VALVE AND VALVE BOX.

A1 YARD HYDRANT DETAIL
N.T.S.

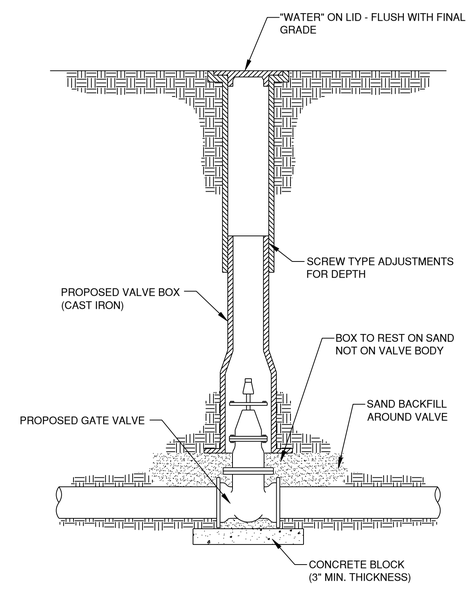

A4 TYPICAL VALVE INSTALLATION
N.T.S.

CMT

License No. 184-000613

CONSULTANTS

MAY 2015

CSO SATELLITE TREATMENT FACILITY CONTRACT NO. 1

OWNER

MATTOON

MATTOON, ILLINOIS: *Working Together to Build the Future*

CITY OF MATTOON

MATTOON, ILLINOIS

MARK	DATE	DESCRIPTION

PROJECT NO:	12078-03-00
CAD DWG FILE:	120780300-C-302-309 CONST DETAILS.DWG
DESIGNED BY:	SCR
DRAWN BY:	SCR
CHECKED BY:	SCR
APPROVED BY:	TJB

COPYRIGHT: CRAWFORD, MURPHY & TILLY, INC. 2015

SHEET TITLE

CONSTRUCTION DETAILS - 4

C-305

SHEET 21 OF 128

Path: J:\Mattoon\12078-03\Draw\Sheets\1-CSO Satellite Treatment\120780300-C-302-309 CONST DETAILS.dwg
Date: Wednesday, June 17, 2015 11:46:53 AM

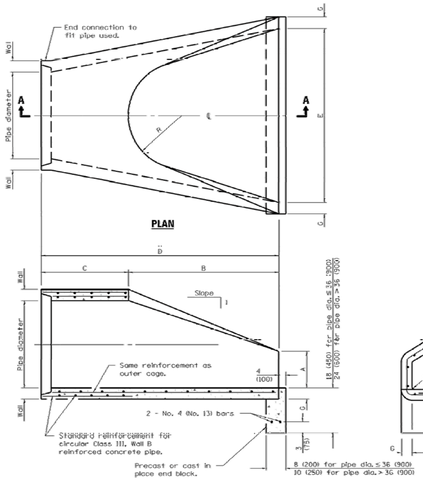

SECTION A–A

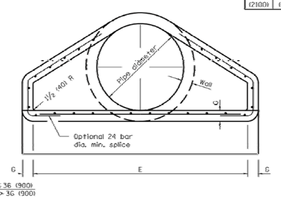

END VIEW

PIPE DIA.	APPROX. QTY. (ea. (kg))	WALL	A	B	C	D	E	G	R	APPROX. SLOPE
12 (300)	530 (240)	2 (51)	4 (102)	24 (610)	4'-0⅝" (1.241 m)	6'-0⅝" (1.852 m)	24 (610)	2 (51)	9 (229)	1:2.4
15 (375)	740 (335)	2¼ (57)	6 (152)	27 (686)	3'-10" (1.168 m)	6'-1" (1.854 m)	30 (762)	2¼ (57)	11 (280)	1:2.4
18 (450)	990 (450)	2½ (64)	9 (229)	27 (686)	3'-10" (1.168 m)	6'-1" (1.854 m)	36 (914)	2½ (64)	12 (305)	1:2.4
21 (525)	1280 (580)	2¾ (70)	9 (229)	35 (889)	38 (965)	6'-1" (1.854 m)	3'-6" (1.067 m)	2¾ (70)	13 (330)	1:2.4
24 (600)	1520 (690)	3 (76)	9½ (241)	3'-7½" (1.102 m)	30 (762)	6'-1½" (1.867 m)	4'-0" (1.219 m)	3 (76)	14 (356)	1:2.5
27 (675)	1930 (875)	3¼ (83)	10½ (267)	4'-0" (1.219 m)	25½ (648)	6'-1½" (1.867 m)	4'-6" (1.372 m)	3¼ (83)	14½ (368)	1:2.4
30 (750)	2190 (995)	3½ (89)	12 (305)	4'-6" (1.375 m)	19¾ (502)	6'-1¾" (1.874 m)	5'-0" (1.524 m)	3½ (89)	15 (381)	1:2.5
33 (825)	3200 (1450)	3¾ (95)	13½ (343)	4'-10½" (1.486 m)	59½ (1511)	8'-1½" (2.483 m)	5'-6" (1.676 m)	3¾ (95)	17½ (445)	1:2.5
36 (900)	4000 (1860)	4 (102)	15 (381)	5'-3" (1.6 m)	34¾ (883)	8'-1¾" (2.483 m)	6'-0" (1.829 m)	4 (102)	20 (508)	1:2.5
42 (1050)	5380 (2440)	4½ (114)	21 (533)	5'-3" (1.6 m)	35 (889)	8'-2" (2.489 m)	6'-6" (1.981 m)	4½ (114)	22 (559)	1:2.5
48 (1200)	6550 (2970)	5 (127)	24 (610)	6'-0" (1.829 m)	26 (660)	8'-2" (2.489 m)	7'-0" (2.134 m)	5 (127)	22 (559)	1:2.5
54 (1350)	8240 (3740)	5½ (140)	27 (686)	5'-5" (1.651 m)	35 (889)	8'-4" (2.54 m)	7'-6" (2.286 m)	5½ (140)	24 (610)	1:2.0
60 (1500)	8730 (3960)	6 (152)	33 (889)	5'-0" (1.524 m)	39 (991)	8'-5" (2.565 m)	8'-0" (2.438 m)	5 (127)	•	1:1.9
66 (1650)	10710 (4860)	6½ (165)	30 (762)	6'-0" (1.829 m)	27 (686)	8'-3" (2.515 m)	8'-6" (2.591 m)	5½ (140)	•	1:1.7
72 (1800)	12520 (5680)	7 (178)	36 (914)	6'-6" (1.981 m)	21 (533)	8'-3" (2.514 m)	9'-0" (2.743 m)	6 (152)	•	1:1.8
78 (1950)	14770 (6700)	7½ (191)	36 (914)	7'-6" (2.286 m)	21 (533)	9'-3" (2.819 m)	9'-6" (2.896 m)	6½ (165)	•	1:1.8
84 (2100)	18160 (8240)	8 (203)	36 (914)	7'-6½" (2.299 m)	21 (533)	9'-3½" (2.832 m)	10'-0" (3.048 m)	6½ (165)	•	1:1.6

• Radius as furnished by manufacturer

GENERAL NOTES

All slope ratios are expressed as units of vertical displacement to units of horizontal displacement (run).

All dimensions are in inches (millimeters) unless otherwise shown.

Illinois Department of Transportation
APPROVED January 1, 2011 — ENGINEER OF BRIDGES AND STRUCTURES
APPROVED January 1, 2011 — ENGINEER OF DESIGN AND ENVIRONMENT
STATE OF ILLINOIS

DATE	REVISIONS
1-1-11	Clarified ref. to pipe dia. on Section A-A. Changed 'inner' to 'outer' cage ref.
1-1-09	Switched units to English (metric).

PRECAST REINFORCED CONCRETE FLARED END SECTION

STANDARD 542301-03

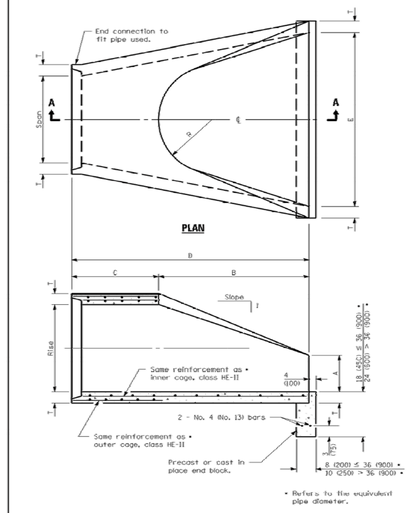

SECTION A–A

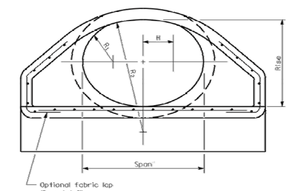

END VIEW

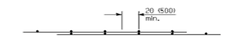

OPTIONAL FABRIC LAP

SPAN	RISE	EQUIV. DIA.	WALL T	A	B	C	D	E	H	R	R_1	R_2	APPROX. SLOPE
23 (584)	14 (356)	18 (450)	2¾ (70)	8 (203)	27 (686)	3'-9" (1.143 m)	6'-0" (1.829 m)	36 (914)	5⅝ (357)	6 (152)	6 (152)	20 (508)	1:3.1
30 (762)	19 (483)	24 (600)	3¼ (83)	8½ (216)	39 (991)	33 (838)	6'-0" (1.829 m)	4'-0" (1.219 m)	6¾ (175)	7 (178)	8¼ (210)	26¼ (667)	1:2.8
34 (864)	22 (559)	27 (675)	3½ (89)	9 (229)	4'-0" (1.219 m)	24 (610)	6'-0" (1.829 m)	4'-6" (1.372 m)	7¾ (197)	8 (203)	9¼ (235)	29¼ (743)	1:2.9
38 (965)	24 (610)	30 (750)	3½ (95)	9½ (241)	4'-6" (1.372 m)	18 (457)	6'-0" (1.829 m)	5'-0" (1.524 m)	8⅝ (219)	9 (229)	10¼ (260)	32¾ (832)	1:2.9
45 (1143)	29 (737)	36 (900)	4½ (114)	11¼ (286)	5'-0" (1.524 m)	36 (914)	8'-0" (2.438 m)	6'-0" (1.829 m)	10½ (267)	12 (305)	12¼ (311)	39¼ (997)	1:2.7
53 (1346)	34 (864)	42 (1050)	5 (127)	15¾ (400)	5'-0" (1.524 m)	36 (914)	8'-0" (2.438 m)	6'-6" (1.981 m)	13¾ (349)	13 (330)	14½ (368)	3'-10" (1.168 m)	1:2.6
60 (1524)	38 (965)	48 (1200)	5½ (140)	21 (533)	5'-0" (1.524 m)	36 (914)	8'-0" (2.438 m)	7'-0" (2.134 m)	15½ (393)	14 (356)	16½ (419)	4'-3½" (1.308 m)	1:2.7
68 (1727)	43 (1092)	54 (1350)	6 (152)	26 (660)	5'-0" (1.524 m)	36 (914)	8'-0" (2.438 m)	7'-6" (2.286 m)	17¼ (387)	16 (406)	18¾ (476)	4'-10½" (1.486 m)	1:2.6
76 (1930)	48 (1219)	60 (1500)	6½ (165)	31 (787)	5'-0" (1.524 m)	36 (914)	8'-0" (2.438 m)	8'-0" (2.439 m)	17 (432)	18 (457)	20¾ (527)	5'-5" (1.651 m)	1:2.6

• Radius as furnished by manufacturer

GENERAL NOTES

All slope ratios are expressed as units of vertical displacement to units of horizontal displacement (run).

All dimensions are in inches (millimeters) unless otherwise shown.

Illinois Department of Transportation
APPROVED January 1, 2009 — ENGINEER OF BRIDGES AND STRUCTURES
APPROVED January 1, 2009 — ENGINEER OF DESIGN AND ENVIRONMENT
STATE OF ILLINOIS

DATE	REVISIONS
1-1-09	Switched units to English (metric).
1-1-07	Soft converted metric reinforcement bars.

PRECAST REINFORCED CONCRETE ELLIPTICAL FLARED END SECTION

STANDARD 542306-02

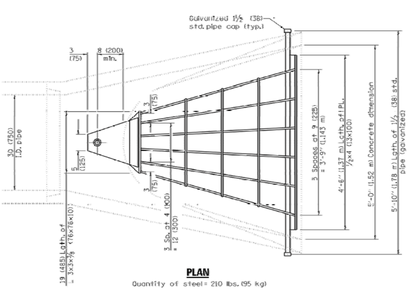

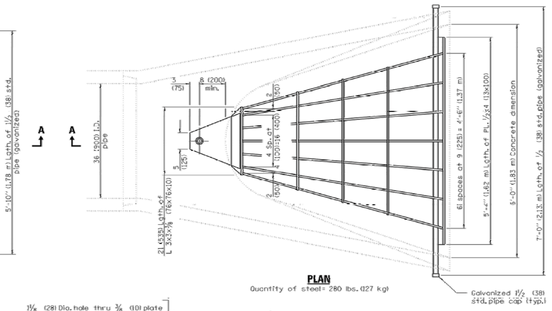

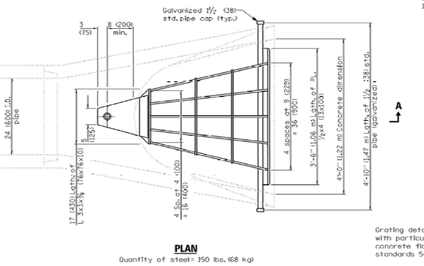

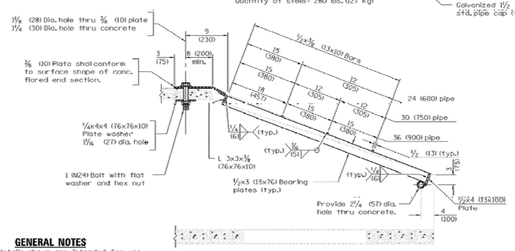

SECTION A–A

GENERAL NOTES

Grating details shown are intended for use with particular sizes of precast reinforced concrete flared end sections as shown on standards 542301 and 542306.

Approximate quantity of steel shown includes total quantity of grating, bolts, nuts, washers and steel pipe.

Holes in the precast concrete flared end sections shall be cored to the diameters noted. If core-out on the other end of the hole occurs, the hole shall be filled with grout to correct the diameter of the hole.

All dimensions are in inches (millimeters) unless otherwise shown.

Illinois Department of Transportation
PASSED January 1, 2012 — ENGINEER OF POLICY AND PROCEDURES
APPROVED January 1, 2012 — ENGINEER OF DESIGN AND ENVIRONMENT
STATE OF ILLINOIS

DATE	REVISIONS
1-1-12	Corrected diameter dimension for 48 inch pipe.
1-1-11	Corrected weld symbols.

GRATING FOR CONCRETE FLARED END SECTION (FOR 24" (600 mm) THRU 54" (1350 mm) PIPE)

(Sheet 1 of 2)

STANDARD 542311-03

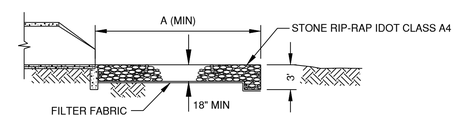

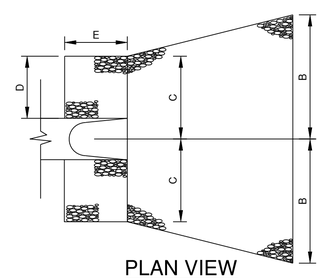

PLAN VIEW

INSIDE DIAMETER STORM SEWER (IN.)	MIN. DIMENSION (FT)				
	A	B	C	D	E
12" thru 24"	15	4	2.0	1.5	4
27" thru 30"	18	5	3.5	2.0	6
36" thru 48"	22	6	4.5	2.5	8
54" thru 60"	25	7	6.0	3.5	10

MAINTENANCE NOTES:

1. INSPECT RIPRAP AFTER STORM EVENTS FOR STONE DISPLACEMENT AND FOR EROSION AT THE SIDES AND ENDS OF THE APRON.
2. MAKE NEEDED REPAIRS IMMEDIATELY; USE APPROPRIATE SIZE STONE, AND DO NOT PLACE THEM ABOVE FINAL GRADE.

A5 RIP-RAP AT END SECTIONS

N.T.S.

CMT

License No. 184-000613

CONSULTANTS

MAY 2015

CSO SATELLITE TREATMENT FACILITY CONTRACT NO. 1

OWNER

MATTOON, ILLINOIS: *Working Together to Build the Future*

CITY OF MATTOON

MATTOON, ILLINOIS

MARK	DATE	DESCRIPTION

PROJECT NO:	12078-03-00
CAD DWG FILE:	120780300-C-302-309 CONST DETAILS.DWG
DESIGNED BY:	SCR
DRAWN BY:	SCR
CHECKED BY:	SCR
APPROVED BY:	TKB

COPYRIGHT: CRAWFORD, MURPHY & TILLY, INC. 2015

SHEET TITLE

CONSTRUCTION DETAILS - 5

C-306

SHEET 22 OF 128

Path: J:\Mattoon\12078-03\Draw\Sheets\1-CSO Satellite Treatment\120780300-C-302-309 CONST DETAILS.dwg
Date: Wednesday, June 17, 2015 11:46:57 AM

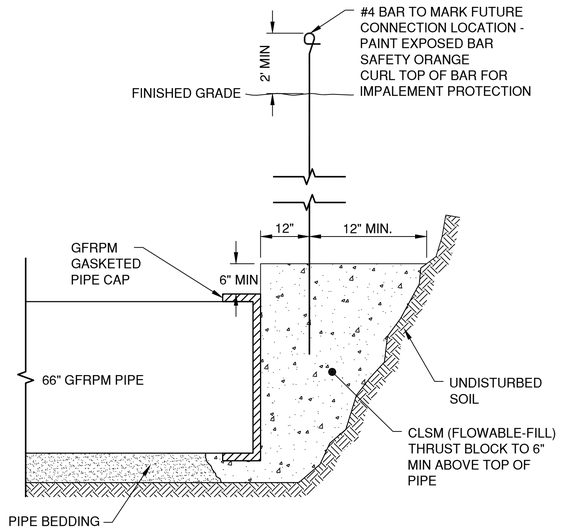

C1 END CAP DETAIL
N.T.S.

REDUCER ENCASEMENT TABLE			
REDUCER SIZE (INCHES)	B (FT. - IN.)	L (FT. - IN.)	REINFORCING
54" x 42" *	7'-0"	5'-0"	10 - #6
54" x 30" *	7'-0"	9'-0"	10 - #6
42" x 24" *	6'-0"	9'-6"	8 - #6

* ENCASEMENT LENGTH AND DIMENSIONS FOR 54" & LARGER GFRPM FITTINGS ARE BASED ON OPERATING PRESSURES, NOT HYDROSTATIC TESTING PRESSURES (ONLY JOINT TESTING PERMITTED)

PIPE ENCASEMENT THRUST RESTRAINT TABLE				
PIPE SIZE (INCHES)	FITTING (DEGREES)	B (FT. - IN.)	L (FT. - IN.)	REINFORCING
66" *	61-90	8'-6"	11'-0"	16 - #6
66" *	31-60	8'-0"	11'-0"	14 - #6
66" *	UP TO 30	8'-0"	10'-0"	12 - #6
60" *	61-90	8'-0"	10'-0"	14 - #6
60" *	31-60	7'-6"	10'-0"	12 - #6
60" *	UP TO 30	7'-6"	9'-0"	12 - #6
54" *	61-90	7'-6"	9'-0"	12 - #6
54" *	31-60	7'-0"	9'-0"	10 - #6
54" *	UP TO 30	7'-0"	7'-0"	10 - #6
48	61-90	6'-6"	8'-0"	10 - #6
48	31-60	6'-6"	7'-0"	10 - #6
48	UP TO 30	6'-6"	5'-6"	10 - #6
42	61-90	6'-0"	8'-0"	8 - #6
42	31-60	6'-0"	7'-0"	8 - #6
42	UP TO 30	6'-0"	5'-6"	8 - #6
36	61-90	5'-6"	6'-0"	8 - #6
36	31-60	5'-6"	5'-0"	8 - #6
36	UP TO 30	5'-6"	4'-0"	8 - #6
30	61-90	5'-0"	5'-0"	8 - #6
30	31-60	5'-0"	4'-6"	8 - #6
30	UP TO 30	5'-0"	4'-0"	8 - #6
24	61-90	4'-6"	4'-0"	8 - #6
24	31-60	4'-6"	4'-0"	8 - #6
24	UP TO 30	4'-6"	4'-0"	8 - #6

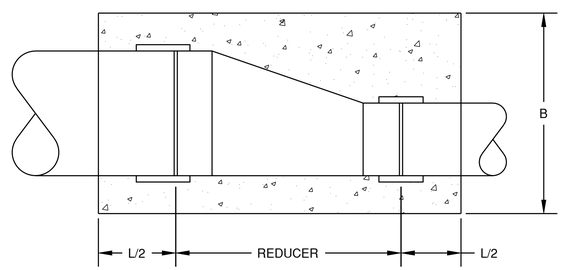

1 REDUCER CONCRETE ENCASEMENT
N.T.S.

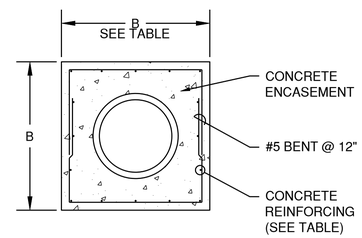

4 CONCRETE ENCASEMENT TYPICAL SECTION
N.T.S.

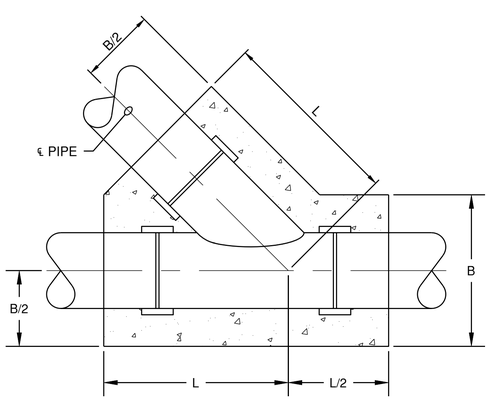

2 WYE CONCRETE ENCASEMENT
N.T.S.

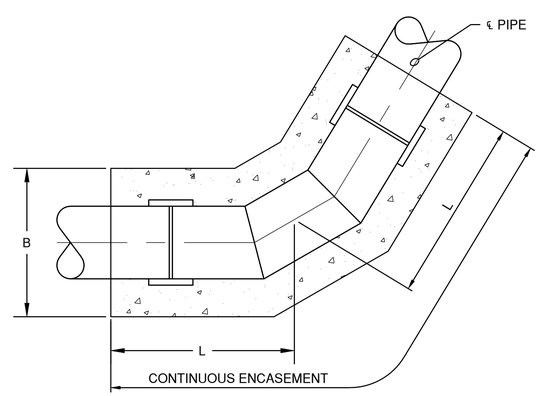

3 30°-60° BEND CONCRETE ENCASEMENT
N.T.S.

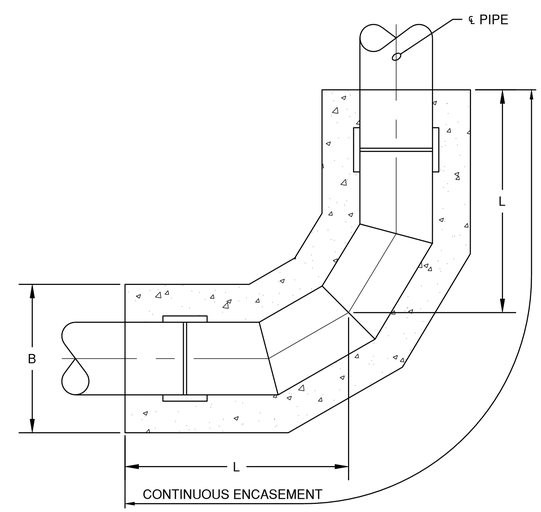

4 61°-90° BEND CONCRETE ENCASEMENT
N.T.S.

CMT
License No. 184-000613
CONSULTANTS

MAY 2015

CSO SATELLITE TREATMENT FACILITY CONTRACT NO. 1

OWNER

MATTOON
MATTOON, ILLINOIS: *Working Together to Build the Future*

CITY OF MATTOON

MATTOON, ILLINOIS

MARK	DATE	DESCRIPTION

PROJECT NO:	12078-03-00
CAD DWG FILE:	120780300-C-302-309 CONST DETAILS.DWG
DESIGNED BY:	SCR
DRAWN BY:	SCR
CHECKED BY:	SCR
APPROVED BY:	

COPYRIGHT: CRAWFORD, MURPHY & TILLY, INC. 2015

SHEET TITLE
CONSTRUCTION DETAILS - 6

C-307

Path: J:\Mattoon\12078-03\Draw\Sheets\1-CSO Satellite Treatment\120780300-C-302-309 CONST DETAILS.dwg
Date: Wednesday, June 17, 2015 11:46:59 AM

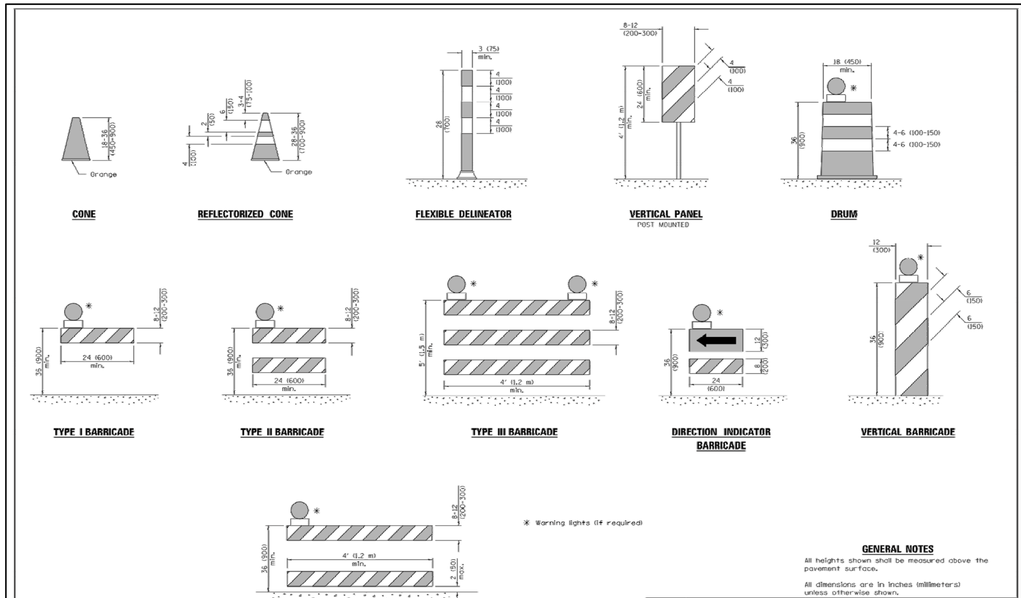

DATE	REVISIONS
1-1-14	Modified flagger sign height.
	Added highway construction speed zone signs.
1-1-12	Added DETECTABLE PEDESTRIAN CHANNELIZING BARRICADE.

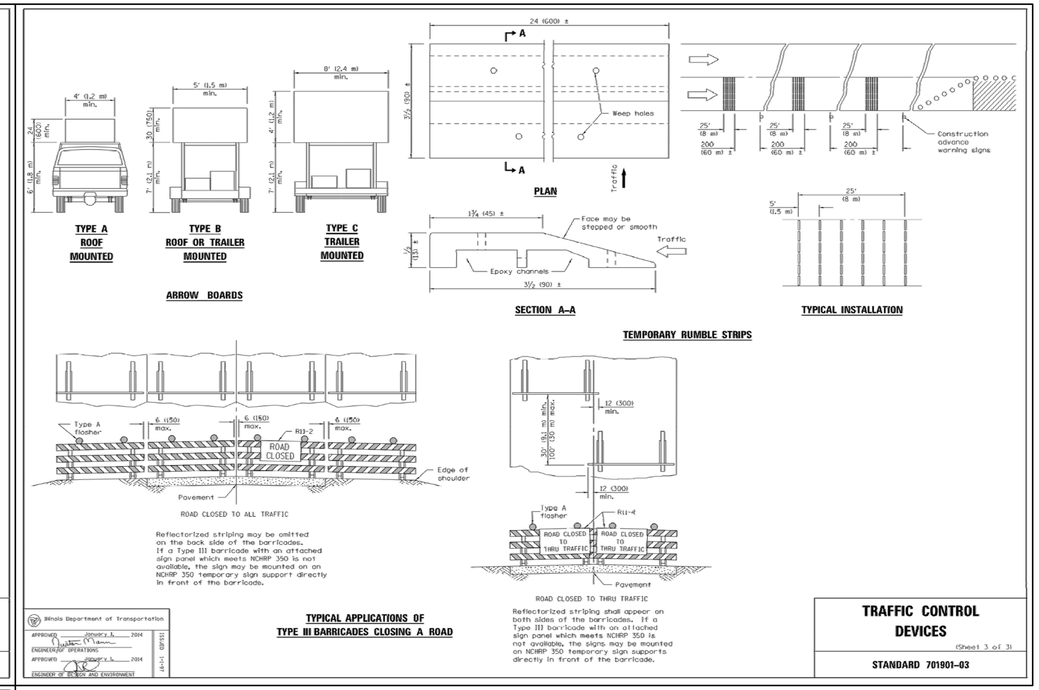

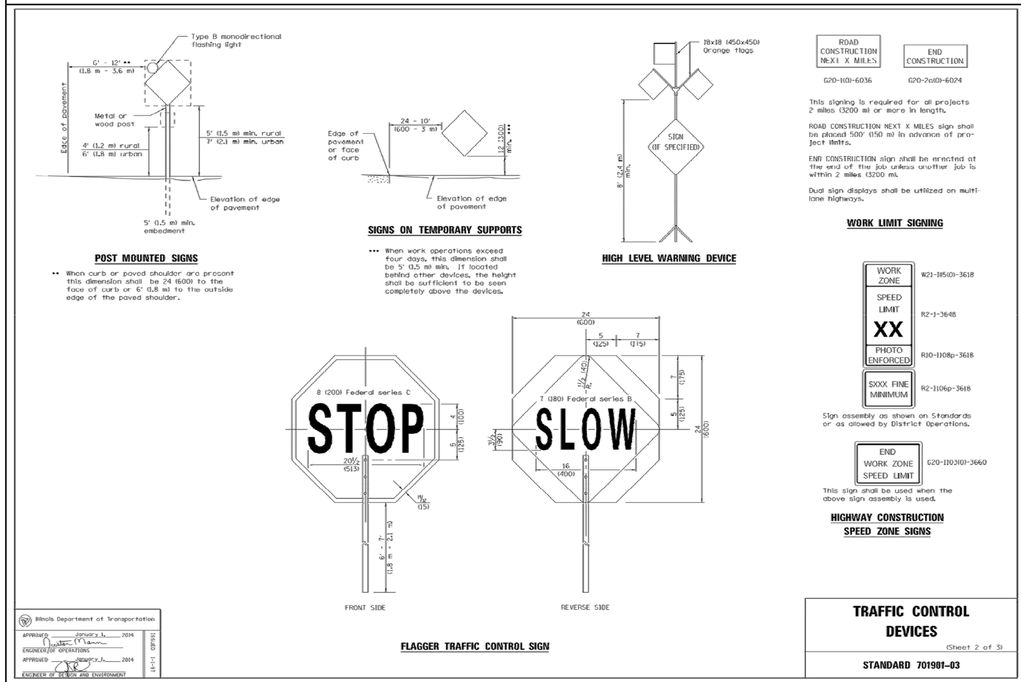

CMT

CONSULTANTS

MAY 2015

CSO SATELLITE TREATMENT FACILITY CONTRACT NO. 1

OWNER

MATTOON

MATTOON, ILLINOIS: *Working Together to Build the Future*

CITY OF MATTOON

MATTOON, ILLINOIS

MARK	DATE	DESCRIPTION

PROJECT NO:	12078-03-00
CAD DWG FILE:	120780300-C-302-309 CONST DETAILS.DWG
DESIGNED BY:	SCR
DRAWN BY:	SCR
CHECKED BY:	SCR
APPROVED BY:	TMB

COPYRIGHT: CRAWFORD, MURPHY & TILLY, INC. 2015

SHEET TITLE

CONSTRUCTION DETAILS - 7

C-308

SHEET 24 OF 128

Path: J:\Mattoon\12078-03\Draw\Sheets\1-CSO Satellite Treatment\120780300-C-302-309 CONST DETAILS.dwg
Date: Wednesday, June 17, 2015 11:47:03 AM

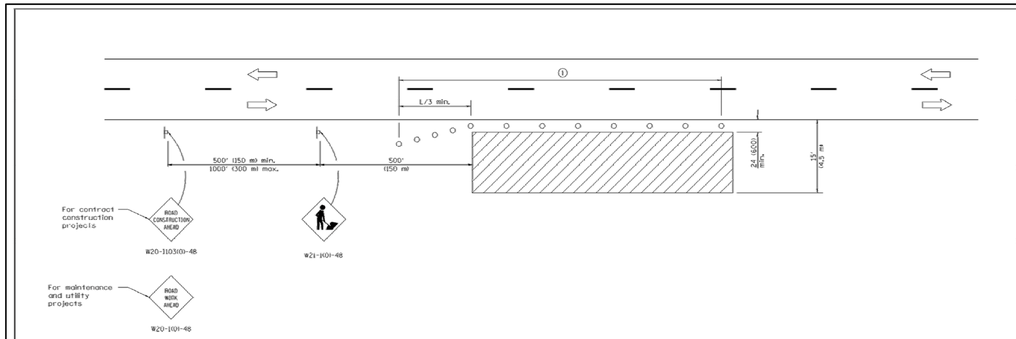

TYPICAL APPLICATIONS

Utility operations
Culvert extensions
Side slope changes
Guardrail installation and maintenance
Delineator installation
Landscaping operations
Shoulder repair
Sign installation and maintenance

① When the work operation exceeds one hour, cones, drums or barricades shall be placed at 25' (8 m) centers for L/3 distance, and at 50' (15 m) centers through the remainder of the work area.

SYMBOLS

Work area
Sign
Cone, drum or barricade

GENERAL NOTES

This Standard is used where any vehicles, equipment, workers or their activities will encroach in the area 15' (4.5 m) to 24 (600) from the edge of pavement.

Calculate L as follows:

SPEED LIMIT	FORMULAS English	FORMULAS Metric
40 mph (70 km/h) or less	$L = \frac{WS^2}{60}$	$L = \frac{WS^2}{150}$
45 mph (80 km/h) or greater:	L=(WXS)	L=0.650(WXS)

W = Width of offset in feet (meters).

S = Normal posted speed mph (km/h).

All dimensions are in inches (millimeters) unless otherwise shown.

Illinois Department of Transportation
APPROVED January 2, 2014
ENGINEER OF SAFETY ENGINEERING
APPROVED January 2, 2014
ENGINEER OF BRIDGES AND ENVIRONMENT
BBS(BD) 1-1-07

DATE	REVISIONS
1-1-14	Revised workers sign
	number to agree with
	current MUTCD.
1-1-15	Omitted text "WORKERS"
	sign.

OFF-RD OPERATIONS, 2L, 2W, 15' (4.5 m) TO 24" (600 mm) FROM PAVEMENT EDGE

STANDARD 701006-05

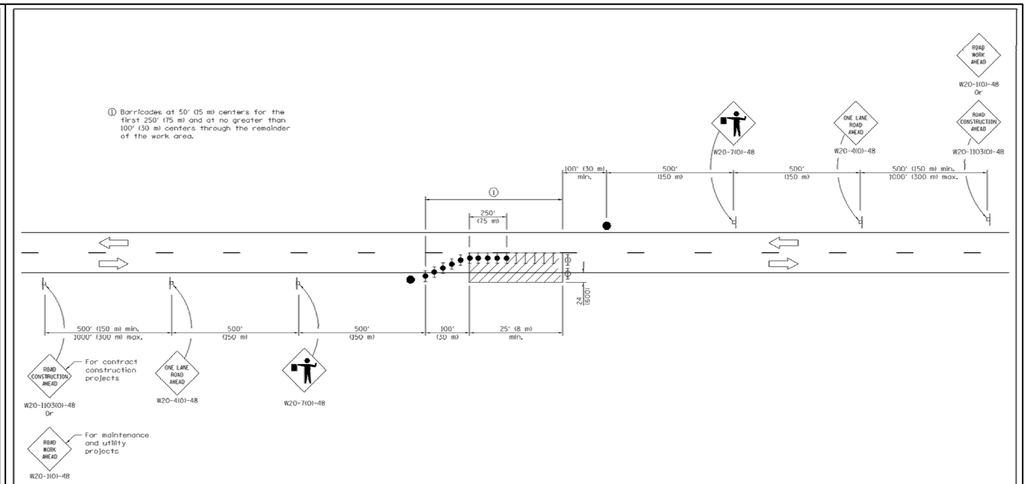

TYPICAL APPLICATIONS

Isolated patch
Installation of drainage structure
Utility operations

SYMBOLS

Work area
Sign
Flagger with traffic control sign
Barricade or drum
Barricade or drum with flashing light
Barricade or drum with steady burning light

GENERAL NOTES

This Standard is used where at any time, any vehicle, equipment, workers or their activities will encroach in the area between the center line and a line 24 (600) from the edge of pavement for nighttime operation.

All dimensions are in inches (millimeters) unless otherwise shown.

Illinois Department of Transportation
APPROVED January 2, 2011
ENGINEER OF SAFETY ENGINEERING
APPROVED January 2, 2011
ENGINEER OF BRIDGES AND ENVIRONMENT
BBS(BD) 1-1-07

DATE	REVISIONS
1-1-11	Revised flagger sign.
1-1-09	Switched units to
	English (metric).
	Corrected sign No.'s.

LANE CLOSURE, 2L, 2W, NIGHT ONLY, FOR SPEEDS ≥ 45 MPH

STANDARD 701206-03

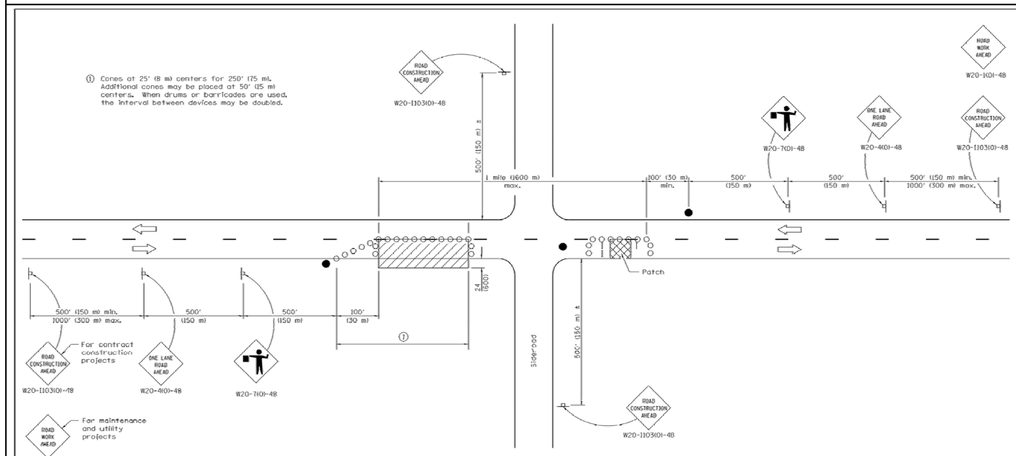

TYPICAL APPLICATIONS

Instant patching
Utility operations
Storm sewer
Culverts
Cable placement

SYMBOLS

Work area
Sign
Barricade or drum
Cone, drum or barricade
Flagger with traffic control sign

GENERAL NOTES

This Standard is used where at any time, any vehicles, equipment, workers or their activities will encroach in the area between the center line and a line 24 (600) outside the edge of pavement for daylight operation.

When the distance between successive work areas exceeds 2000' (600 m), additional warning signs, flaggers, and taper shall be placed as shown.

All dimensions are in inches (millimeters) unless otherwise shown.

Illinois Department of Transportation
APPROVED January 2, 2011
ENGINEER OF SAFETY ENGINEERING
APPROVED January 2, 2011
ENGINEER OF BRIDGES AND ENVIRONMENT
BBS(BD) 1-1-07

DATE	REVISIONS
1-1-11	Revised flagger sign.
1-1-09	Switched units to
	English (metric).
	Corrected sign No.'s.

LANE CLOSURE, 2L, 2W, DAY ONLY, FOR SPEEDS ≥ 45 MPH

STANDARD 701201-04

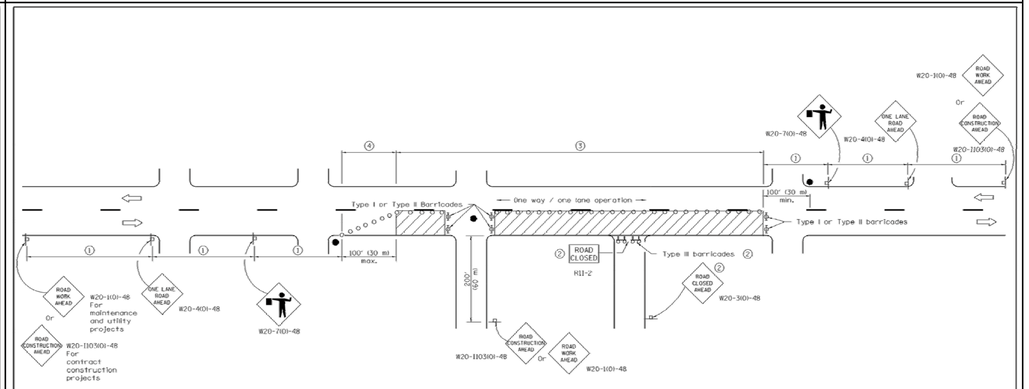

SIGN SPACING	
Posted Speed	Sign Spacing
55	500' (150 m)
50-45	350' (100 m)
<45	200' (60 m)

SYMBOLS

Work area
Cone, drum or barricade (not required for moving operations)
Sign on portable or permanent support
Flagger with traffic control sign
Barricade or drum with flashing light
Type III barricade with flashing lights

① Refer to SIGN SPACING TABLE for distances.
② For approved sideroad closures.
③ Cones at 25' (8 m) centers for 250' (75 m). Additional cones may be placed at 50' (15 m) centers. When drums or Type I or Type II barricades are used, the interval between devices may be doubled.
④ Cones, drums or barricades at 20' (6 m) centers.

GENERAL NOTES

This Standard is used where at any time, day or night, any vehicle, equipment, workers or their activities encroach on the pavement requiring the closure of one traffic lane in an urban area.

All dimensions are in inches (millimeters) unless otherwise shown.

Illinois Department of Transportation
APPROVED January 2, 2011
ENGINEER OF SAFETY ENGINEERING
APPROVED January 2, 2011
ENGINEER OF BRIDGES AND ENVIRONMENT
BBS(BD) 1-1-07

DATE	REVISIONS
1-1-11	Revised flagger sign.
1-1-09	Switched units to
	English (metric).
	Corrected sign No.'s.

URBAN LANE CLOSURE, 2L, 2W, UNDIVIDED

STANDARD 701501-06

CMT

CONSULTANTS

MAY 2015

CSO SATELLITE TREATMENT FACILITY CONTRACT NO. 1

OWNER

MATTOON, ILLINOIS: *Working Together to Build the Future*

CITY OF MATTOON

MATTOON, ILLINOIS

MARK	DATE	DESCRIPTION

PROJECT NO:	12078-03-00
CAD DWG FILE:	120780300-C-302-309 CONST DETAILS.DWG
DESIGNED BY:	SCR
DRAWN BY:	SCR
CHECKED BY:	SCR
APPROVED BY:	TKB

COPYRIGHT: CRAWFORD, MURPHY & TILLY, INC. 2015

SHEET TITLE

CONSTRUCTION DETAILS - 8

C-309

SHEET 25 OF 128

Path: J:\Mattoon\12078-03\Draw\Sheets\1-CSO Satellite Treatment\120780300-C-302-309 CONST DETAILS.dwg
Date: Wednesday, June 17, 2015 11:47:07 AM

GENERAL STRUCTURAL NOTES

1. VERIFY DRAWINGS FOR LOCATION OF ALL OPENINGS IN WALLS AND SLABS.
2. ALL ANCHOR BOLTS, NUTS, WASHERS, ETC. SHALL BE GALVANIZED IN ACCORDANCE WITH THE REQUIREMENTS OF ASTM A-153 UNLESS OTHERWISE NOTED.
3. ALL FILL OR BACKFILL WITHIN THE LIMITS OF A BUILDING OR A STRUCTURE SHALL BE COMPACTED ACCORDING TO THE SPECIFICATIONS.
4. ALL ALUMINUM SURFACES IN CONTACT WITH CONCRETE SHALL BE COATED WITH UNTHINNED BITUMASTIC PAINT. ALL ALUMINUM SURFACES IN CONTACT WITH STEEL OR DISSIMILAR METAL SHALL BE ISOLATED BY 1/4" MIN. THICKNESS 60 DUROMETER NEOPRENE PADS.
5. INSTALL MIN. $\frac{3}{16}$" THICK 60 DUROMETER NEOPRENE WASHER BETWEEN DIFFERING METALS THAT ARE CONNECTED, INCLUDING ANCHOR BOLTS.
6. FOR ALL PIPE PENETRATIONS THROUGH FLOOR SLABS, WALLS, OR RAISED SLABS, SEE MECHANICAL SHEETS FOR TYPE OF SEAL REQUIRED.
7. CONTRACTOR SHALL COORDINATE STRUCTURAL SHEETS WITH ALL OTHER SHEETS FOR PIPE SIZES AND LOCATIONS, BLOCK OUTS, ELECTRICAL REQUIREMENTS AND ANCHOR BOLTED ATTACHMENTS, AND SHALL COORDINATE THE INSTALLATION OF ELECTRICAL AND MECHANICAL EQUIPMENT WITH THE RESPECTIVE SUB-CONTRACTORS PRIOR TO THE PLACEMENT OF CONCRETE. SEE HVAC, MECHANICAL, AND ELECTRICAL PLANS FOR SLEEVES, INSERTS, ETC.
8. CONTRACTOR IS RESPONSIBLE FOR ADEQUACY OF TEMPORARY SHORING, TO RESIST ALL LOADING CONDITIONS DURING CONSTRUCTION.
9. SHORING FOR ROOF AND FLOOR SLABS SHALL BE REMOVED IN SUCH A MANNER AS TO MAINTAIN A UNIFORM LOADING ON THE SLAB AT ALL TIMES. REMOVAL OF SHORING SHALL NOT BEGIN UNTIL THE CONCRETE HAS ATTAINED ITS SPECIFIED STRENGTH.
10. UNLESS SPECIFICALLY DETAILED HEREIN, NO PIPES OR SLEEVES SHALL PASS THROUGH STRUCTURAL MEMBERS WITHOUT WRITTEN PERMISSION OF THE STRUCTURAL ENGINEER OF RECORD.
11. ALL FOOTING EXCAVATIONS SHALL BE CLEAN AND FREE OF DEBRIS, STANDING WATER AND LOOSE SOIL AND SHALL BE OBSERVED BY THE ENGINEER PRIOR TO PLACEMENT OF CONCRETE.
12. IN STRUCTURAL AREAS (WHERE STRUCTURES DERIVE SOME OR ALL SUPPORT FROM FILL-SUPPORTED FOUNDATIONS) AND SLABS-ON-GRADE, FILL SHALL BE COMPACTED TO 98 PERCENT OF STD. PROCTOR MAXIMUM DRY DENSITY (ASTM D-698), UNLESS OTHERWISE SPECIFIED.
13. PROTECT SUBGRADE AT ALL TIMES INCLUDING PROPER DRAINAGE OF CONSTRUCTION AREAS, PREVENTION OF STANDING WATER, MINIMIZING CONSTRUCTION TRAFFIC AND PLACING FOUNDATION AS SOON AS POSSIBLE AFTER EXCAVATING (PREFERABLY THE SAME DAY).
14. ALL FILL MATERIAL SHALL BE ACCPTABLE TO THE ENGINEER FOR USE IN ADVANCE OF PLACEMENT. NO FILL SHALL BE PLACED OVER FROZEN, MUDDY OR OTHER DELETERIOUS MATERIAL. LIFT THICKNESS SHALL BE MINIMIZED TO ALLOW EFFICIENT COMPACTION. NO FILL MAY BE PLACED OVER A PREVIOUS LIFT THAT HAS NOT BEEN ADEQUATELY COMPACTED AND HAS NOT BEEN ACCEPTED BY THE ENGINEER. SEE SPECIFICATIONS FOR ADDITIONAL REQUIREMENTS.
15. BACKFILL AGAINST BELOW GRADE WALLS SHALL BE PLACED EVENLY ON ALL SIDES, UNLESS OTHERWISE NOTED.
16. ALL POST INSTALLED ANCHOR BOLTS SHALL BE SIMPSON ADHESIVE ANCHORS OR ENGINEER APPROVED EQUAL.
17. DO NOT SCALE DIMENSIONS FOR CONSTRUCTION.
18. ALL WORK SHALL BE IN ACCORDANCE WITH IBC 2003 OR LATER EDITION.

ABBREVIATIONS

∠	ANGLE	MFR	MANUFACTURE (ER)
ADH	ADHESIVE	MH	MANHOLE
ALT	ALTERNATE	MIN	MINIMUM
ALUM	ALUMINUM	MISC	MISCELLANEOUS
APPROX	APPROXIMATE	MO	MASONRY OPENING
BF	BOTTOM FACE	N	NORTH
BLDG	BUILDING	NO	NUMBER
BRG	BEARING	NOM	NOMINAL
BTWN	BETWEEN	NTS	NOT TO SCALE
CA	COURSE AGGREGATE	OC	ON CENTER (S)
CJ	CONTRACTION JOINT	OD	OUTSIDE DIAMETER
CL	CENTERLINE	OPNG	OPENING
CL	CLEAR	OPP	OPPOSITE
CMU	CONCRETE MASONRY UNIT	PCC	PRECAST CONCRETE
CONST	CONSTRUCTION	PCC	PORTLAND CEMENT CONCRETE
CONT	CONTINUOUS OR CONTINUE	PJF	PREFORMED JOINT FILLER
CTR OR CTS	CENTER	PLF	POUNDS PER LINEAL FOOT
CY	CUBIC YARD	PNT	PAINT (ED)
℄	CENTERLINE	PRV	PRESSURE RELIEF VALVE
DIA	DIAMETER	PSF	POUNDS PER SQUARE FOOT
DIAG	DIAGONAL	PSI	POUNDS PER SQUARE INCH
DIM	DIMENSION	PVC	POLYVINYL CHLORIDE
DIP	DUCTILE IRON PIPE	R	RADIUS
DL	DEAD LOAD	RCP	REINFORCED CONCRETE PIPE
DN	DOWN	REINF	REINFORCE (D), (ING)
DWG	DRAWING	REQ'D OR REQ'D	REQUIRED
EA	EACH	REV	REVISION (S), REVISED
EF	EACH FACE	RO	ROUGH OPENING
EJ	EXPANSION JOINT	RT	RIGHT
EL OR ELEV	ELEVATION	SCH	SCHEDULE
EQ	EQUAL	SECT	SECTION
ES	EACH SIDE	SHT	SHEET
EW	EACH WAY	SIM	SIMILAR
EXG OR EXIST	EXISTING	SLNT	SEALANT
FA	FINE AGGREGATE	SPEC	SPECIFICATION (S)
FIN	FINISH (ED)	SQ YD	SQUARE YARD
FND	FOUNDATION	SS	STAINLESS STEEL
FRP	FIBERGLASS REINFORCED PLASTIC	STD	STANDARD
FT	FOOT OR FEET	STL	STEEL
GALV	GALVANIZED	STR	STRUCTURAL
GC	GENERAL CONTRACT (OR)	SY	SQUARE YARD
GFRPM	GLASS FIBER REINFORCED POLYMER MORTAR	SYM	SYMMETRY (ICAL)
		T&B	TOP AND BOTTOM
GR	GRADE, GRATE	TC	TOP OF CONCRETE
HDG	HOT DIPPED GALVANIZED	TEMP	TEMPORARY
HORZ	HORIZONTAL	TF	TOP FACE
ID	INSIDE DIAMETER	THK	THICK (NESS)
IE OR INV	INVERT ELEVATION	TOC	TOP OF CONCRETE
INT	INTERIOR	TOS	TOP OF STEEL
JT	JOINT	TYP	TYPICAL
LB	POUND	UNO	UNLESS NOTED OTHERWISE
LL	LIVE LOAD	VERT	VERTICAL
LT	LEFT	W	WIDTH, WIDE
MAS	MASONRY	WS	WATERSTOP
MAX	MAXIMUM	WWR	WELDED WIRE REINFORCEMENT

CONCRETE NOTES

1. ALL CAST-IN-PLACE CONCRETE PART OF A WATER CONVEYING OR WATER CONTAINING STRUCTURE SHALL HAVE A MINIMUM 28 DAY COMPRESSIVE STRENGTH OF 4,500 P.S.I. ALL OTHER CONCRETE SHALL HAVE A MINIMUM COMPRESSIVE STRENGTH OF 4,000 P.S.I.
2. ALL REINFORCEMENT BARS SHALL CONFORM TO ASTM-A615, GRADE 60.
3. ALL WELDED WIRE REINFORCEMENT SHALL CONFORM TO ASTM-A185. (FLAT STOCK ONLY)
4. ALL CONCRETE WORK SHALL CONFORM TO ACI 301 "SPECIFICATIONS FOR STRUCTURAL CONCRETE" EXCEPT AS MODIFIED BY THE CONTRACT DOCUMENTS.
5. REINFORCING BAR LAP SPLICES SHALL BE CLASS "B" SPLICES UNLESS SHOWN OTHERWISE ON THE DRAWINGS. MECHANICAL SPLICES MAY BE USED IN LIEU OF LAP SPLICES. MECHANICAL SPLICES SHALL DEVELOP IN TENSION OR COMPRESSION, AT LEAST 125 PERCENT OF THE SPECIFIED YIELD STRENGTH, Fy OF THE BAR. THE CONTRACTOR SHALL SUBMIT, TO THE ENGINEER, MANUFACTURER'S LITERATURE, PRODUCT SAMPLES AND CERTIFIED TEST REPORTS PRIOR TO RECEIVING APPROVAL OF THE MECHANICAL SPLICES. LOCATIONS OF THE MECHANICAL BAR SPLICES SHALL BE SHOWN ON THE REINFORCING STEEL SHOP DRAWINGS.
6. AT CONSTRUCTION JOINTS SHOWN ON THE PLANS, WHERE DOWELS WILL PENETRATE CONSTRUCTION FORMWORK, THE CONTRACTOR MAY USE A MANUFACTURED DOWEL BAR SUBSTITUTION SYSTEM WHEN APPROVED IN WRITING BY THE STRUCTURAL ENGINEER OF RECORD. THE CONTRACTOR SHALL SUBMIT MANUFACTURER'S LITERATURE, PRODUCT SAMPLES AND CERTIFIED TEST REPORTS TO THE ENGINEER FOR APPROVAL. THE CONTRACTOR SHALL ALSO INCLUDE INFORMATION ON WHERE HE PROPOSES TO USE THEM. TEST REPORTS SHALL SHOW YIELD AND ULTIMATE TENSILE LOAD CAPACITIES.
7. CONCRETE PROTECTION (MINIMUM CONCRETE COVER) FOR REINFORCEMENT SHALL BE AS FOLLOWS, UNLESS OTHERWISE NOTED:
   - 7.A. CONCRETE CAST AGAINST AND PERMANENTLY EXPOSED TO EARTH 3"
   - 7.B. CONCRETE EXPOSED TO EARTH OR WEATHER 2"
   - 7.C. CONCRETE NOT EXPOSED TO WEATHER OR IN CONTACT WITH GROUND
     - 7.C.1. SLABS 3/4"
     - 7.C.2. WALLS, BEAMS, COLUMNS, PRIMARY REINFORCEMENT, TIES, STIRRUPS, SPIRALS 1-1/2"
8. ALL REINFORCEMENT BARS SHALL BE CLEAN AND FREE OF GREASE, SCALING RUST, AND OTHER FOREIGN MATERIALS.
9. UNLESS OTHERWISE INDICATED, FOR SLABS ON GRADE, USE 1/2" THICK PREMOLDED JOINT FILLER TO ISOLATE THE SLAB FROM CONTACT WITH THE STRUCTURES ALONG ITS PERIMETER AND APPLY TWO-COMPONENT POLYURETHANE SEALANT, 3/4" MINIMUM DEPTH.
10. A LEAN CONCRETE MUD SLAB 3 TO 4 INCHES THICK SHALL BE USED IN THE FOOTING EXCAVATION IF THE BOTTOM OF THE EXCAVATION TENDS TO BECOME MUDDY AND SOFT. LEAN CONCRETE SHALL HAVE A MINIMUM 28 DAY COMPRESSIVE STRENGTH OF 2,000 P.S.I.
11. ALL EXPOSED EDGES AND EQUIPMENT PADS SHALL BE CHAMFERED 3/4".
12. TWO #5 BARS EACH FACE SHALL BE PROVIDED DIAGONALLY AT ALL CORNERS OF DOOR OPENINGS. BARS SHALL BE EXTENDED 24 IN. MINIMUM BEYOND CORNERS OF THE OPENINGS.
13. UNLESS NOTED OTHERWISE, PROVIDE CONTROL OR CONSTRUCTION JOINTS IN SLABS-ON-GRADE AT 15'-0" MAXIMUM SPACES EACH DIRECTION OR AS SHOWN ON DRAWINGS. CONTROL JOINTS TO BE SAW CUT 1/4 OF THE SLAB THICKNESS DEEP OR USE A PREFORMED CONTROL JOINT FORMER APPROVED BY THE ENGINEER.
14. NO CONSTRUCTION JOINTS EXCEPT THOSE SHOWN ON THE PLANS WILL BE ALLOWED EXCEPT THOSE SUBMITTED BY THE CONTRACTOR IN WRITING AND ACCEPTABLE TO THE ENGINEER.
15. EXPOSED CONCRETE SHALL RECEIVE A RUBBED FINISH TO 1'-0' MINIMUM BELOW FINISH GRADE. FINISH SHALL MEET THE REQUIREMENTS OF SURFACE FINISH 3.0 AS SPECIFIED IN ACI 301-10.
16. ALL CONCRETE EXPOSED TO VIEW SHALL BE FORMED USING A SMOOTH FORM FINISH SYSTEM PER SPECIFICATION SECTION 03300.

*CLASS "B" SPLICE
f'c = 4,000 PSI fy = 60,000 PSI

	UNCOATED BARS		EPOXY COATED BARS	
	OTHER BARS	TOP BARS	OTHER BARS	TOP BARS
#4	2'-1'	2'-9"	2'-6"	3'-3"
#5	2'-7"	3'-5"	3'-1"	4'-1"
#6	3'-1"	4'-1"	3'-9"	4'-10"
#7	4'-6"	5'-11"	5'-5"	7'-1"
#8	5'-2"	6'-9"	6'-2"	8'-1"
#9	5'-10"	7'-7"	7'-0"	9'-1"
#10	6'-6"	8'-5"	7'-9"	10'-1"
#11	7'-1"	9'-3"	8'-6"	11'-1"

NOTE:
TOP BARS CONSIST OF HORIZONTAL REINFORCEMENT SO PLACED THAT MORE THAN 12" OF FRESH CONCRETE IS CAST IN THE MEMBER BELOW THE SPLICE.

PER ACI 318-08 BUILIDNG CODE REQUIREMENTS FOR REINFORCED CONCRETE.

EXISTING STRUCTURE NOTES

1. IT SHALL BE THE RESPONSIBILITY OF THE CONTRACTOR TO VERIFY ALL DIMENSIONS AND ELEVATIONS OF THE EXISTING STRUCTURES IN THE FIELD PRIOR TO INITIATING CONSTRUCTION AND ORDERING MATERIALS. DO NOT SCALE DIMENSIONS FROM DRAWINGS FOR CONSTRUCTION PURPOSES.
2. PLAN DIMENSIONS AND DETAILS RELATIVE TO EXISTING STRUCTURES HAVE BEEN TAKEN FROM EXISTING PLANS AND ARE SUBJECT TO NOMINAL CONSTRUCTION VARIATIONS. IT SHALL BE THE CONTRACTOR'S RESPONSIBILITY TO VERIFY SUCH DIMENSIONS AND DETAILS IN THE FIELD AND MAKE NECESSARY, APPROVED BY THE ENGINEER, ADJUSTMENTS PRIOR TO CONSTRUCTION OR ORDERING OF OF MATERIALS. SUCH VARIATIONS SHALL NOT BE CAUSE FOR ADDITIONAL COMPENSATION FOR A CHANGE IN THE SCOPE OF WORK.
3. IF, DURING THE PERFORMANCE OF THE WORK, THE CONTRACTOR FINDS A CONFLICT OR DISCREPANCY RELATED TO EXISTING DETAILS AND DIMENSIONS OF THE EXISTING STRUCTURE, THE CONTRACTOR SHALL REPORT SUCH DISCREPANCIES TO THE ENGINEER AT ONCE BEFORE PROCEEDING WITH THE WORK.

MASONRY NOTES

1. ALL CONCRETE MASONRY UNITS SHALL BE GRADE N-1.
2. ALL GROUT FOR MASONRY SHALL BE NON-SHRINK AND SHALL HAVE A MINIMUM 28 DAY COMPRESSIVE STRENGTH OF 2500 P.S.I.
3. ALL MASONRY CELLS WITH VERTICAL REINFORCEMENT SHALL BE GROUTED SOLID.
4. ALL LINTEL BEARINGS SHALL BE GROUTED SOLID TO FOUNDATION AND SHALL CONTAIN 1 - #5 BAR FULL HEIGHT.
5. LINTEL BEARING PLATES SHALL BE FULLY GROUTED WITH 1/2" MIN. THICKNESS NON-SHRINK GROUT.
6. ANCHOR BOLTS SHALL BE PROVIDED AT ALL LINTEL MASONRY BEARINGS.
7. CONCRETE MASONRY UNITS SHALL HAVE TWO CELLS AS SPECIFIED IN DIVISION (4) OF THE SPECIFICATIONS.
8. MORTAR SHALL BE TYPE "S" WITH A MINIMUM COMPRESSIVE STRENGTH OF 1800 P.S.I. AT 28 DAYS.
9. UNITS SHALL BE PLACED IN RUNNING BOND, UNLESS OTHERWISE NOTED.
10. MASONRY CONSTRUCTION TO CONFORM TO THE REGULATIONS OF THE 2012 INTERNATIONAL BUILDING CODE AND ACI 530 BUILDING CODE REQUIREMENTS FOR MASONRY STRUCTURES.
11. HORIZONTAL JOINT REINFORCEMENT IN MASONRY SHALL BE PLACED IN THE FIRST THREE MORTAR JOINTS ABOVE LINTELS AND BELOW OPENINGS. EXTEND THE REINFORCEMENT AT LEAST 24" PAST JAMBS. IN ADDITION, PROVIDE WIRE TIES ALTERNATING WITH REINFORCEMENT @ 16" CENTERS VERTICALLY AND WITHIN 12" OF OPENING JAMBS.
12. REINFORCEMENT SHALL BE AS CALLED FOR ON THE DRAWINGS. ALL REINFORCEMENT BARS SHALL CONFORM TO ASTM - A615 GRADE 60.
13. MASONRY DESIGN BASED ON INSPECTED WORKMANSHIP F'm = 1500 PSI.

STRUCTURAL STEEL NOTES

1. UNLESS OTHERWISE INDICATED, STRUCTURAL STEEL WIDE FLANGE SECTIONS SHALL CONFORM TO ASTM A992 GRADE 50.
2. UNLESS OTHERWISE INDICATED, ALL CHANNEL SECTIONS, MISCELLANEOUS ANGLES AND PLATES SHALL BE ASTM A36.
3. UNLESS OTHERWISE INDICATED, ALL TUBE MEMBERS SHALL BE ASTM A500 GRADE B.
4. ALL WELDS SHALL BE PERFORMED BY THE ELECTRIC ARC METHOD USING E70XX ELECTRODES AND SHALL CONFORM TO AWS STRUCTURAL WELDING CODE D1.1 LATEST EDITION.
5. CONNECTIONS NOT DETAILED ON THE PLANS SHALL BE SELECTED IN ACCORDANCE WITH AISC SPECIFICATIONS, TYPE 2 FRAMING CONNECTIONS USING 3/4" DIAMETER ASTM A325-N BOLTS. FOR A GIVEN SIZE AND GRADE OF BEAM, CONNECTIONS SHALL BE SELECTED BY THE FABRICATOR TO SUPPORT THE FOLLOWING BEAM REACTIONS (UNLESS REACTION VALUES ARE SHOWN ON THE DRAWINGS)

   $R = \frac{W}{2}$, W = MAXIMUM TOTAL UNIFORM LOAD (ASD), KIPS

   PER AISC STEEL CONSTRUCTION MANUAL THIRTEENTH EDITION, PART 3.
6. UNLESS OTHERWISE INDICATED, ALL ANCHOR BOLTS FOR BUILDING STRUCTURE SHALL CONFORM TO ASTM A-36 OR ASTM A307.
7. ALL DETAILING, FABRICATION AND ERECTION OF STRUCTURAL STEEL SHALL CONFORM TO AISC STEEL CONSTRUCTION MANUAL, THIRTEENTH EDITION.
8. OPENINGS REQUIRED IN STRUCTURAL STEEL MEMBERS SHALL BE SHOWN ON THE SHOP DRAWINGS. FIELD CUTTING OF HOLES IN STRUCTURAL STEEL MEMBERS SHALL NOT BE ALLOWED WITHOUT THE WRITTEN PERMISSION OF THE STRUCTURAL ENGINEER OF RECORD.
9. CONTRACTOR SHALL VERIFY ALL DIMENSIONS PRIOR TO STRUCTURAL STEEL FABRICATION.
10. WHENEVER CONSTRUCTION SCHEDULING REQUIRES THE ERECTION OF STRUCTURAL MEMBERS, WHICH BY THEMSELVES WOULD BE CONSIDERED LATERALLY UNSTABLE, ADEQUATE TEMPORARY BRACING SHALL BE PROVIDED.
11. STRUCTURAL STEEL SHALL BE COATED IN ACCORDANCE WITH DIVISION 9 OF THE SPECIFICATIONS, UNLESS NOTED OTHERWISE. ALL FIELD CONNECTIONS AND DAMAGED PORTIONS OF SHOP PAINT SHALL BE SPOT PAINTED UNLESS ENCASED IN CONCRETE.
12. THE SURFACE OF EXISTING STEEL TO BE WELDED SHALL BE CLEANED TO THE BARE METAL PRIOR TO WELDING.
13. ALL CONNECTIONS TO PIPE AND TUBE COLUMNS SHALL BE THRU-PLATE TYPE UNLESS OTHERWISE SHOWN.
14. THE CONTRACTOR SHALL FURNISH AND INSTALL MISCELLANEOUS STEEL (CURBS, HANGERS, BRACING, ETC.) AS CALLED FOR OR AS NECESSARY PER ARCHITECTURAL, MECHANICAL AND ELECTRICAL DRAWINGS.
15. ALL HEADED STUDS SHALL CONFORM TO ASTM SPECIFICATION A108 OR TYPE 304 STAINLESS STEEL.

STEEL DECK NOTES

1. THE MANUFACTURING, DETAILING AND ERECTING OF METAL DECK SHALL BE ACCORDANCE WITH THE STEEL DECK INSTITUTE SPECIFICATION. STRUCTURAL DIAPHRAGM ACTION SHALL BE PROVIDED BY THE METAL DECK AND ITS WELDED ATTACHMENT.
2. METAL DECK SHALL BE CONTINUOUS OVER AT LEAST 2 SPANS WITH JOINTS OVER SUPPORTING MEMBERS.

CMT

License No. 184-000613

CONSULTANTS

MAY 2015

CSO SATELLITE TREATMENT FACILITY CONTRACT NO. 1

OWNER

MATTOON

MATTOON, ILLINOIS: *Working Together to Build the Future*

CITY OF MATTOON

MATTOON, ILLINOIS

MARK	DATE	DESCRIPTION

PROJECT NO:	12078-03-00
CAD DWG FILE:	120780300-S-001.DWG
DESIGNED BY:	JJF
DRAWN BY:	JJF/KMM
CHECKED BY:	JJF
APPROVED BY:	TAB

COPYRIGHT: CRAWFORD, MURPHY & TILLY, INC. 2015

SHEET TITLE

GENERAL STRUCTURAL NOTES

S-001

Path: J:\Mattoon\12078-03\Draw\Sheets\1-CSO Satellite Treatment\120780300-S-001.dwg
Date: Wednesday, June 17, 2015 11:47:47 AM

BUILDING DESIGN DATA

DESIGN LOADS - 2006 INTERNATIONAL BUILDING CODE/ASCE7-05

FLOOR LIVE LOADS		100 P.S.F.
ROOF LIVE LOADS		20 P.S.F.
SNOW LOAD	BASIC GROUND SNOW LOAD (INCREASED FOR DRIFT PER IBC CHAPTER 16 / ASCE 7)	25 P.S.F.
	EXPOSURE FACTOR, Ce	1.0
	IMPORTANCE FACTOR, I	1.1
	THERMAL FACTOR, Ct	1.1
LATERAL LOAD-WIND -		
	BASIC WIND SPEED	90 M.P.H.
	EXPOSURE CATEGORY	C
	IMPORTANCE FACTOR	1.15
	INTERNAL PRESSURE COEFFICIENT	±0.18
LATERAL LOAD-SEISMIC -		
	S_S	0.37 g
	S_1	0.13 g
	S_{DS}	0.37 g
	S_{D1}	0.19 g
	OCCUPANCY CATEGORY	III
	SITE CLASS	D
	IMPORTANCE FACTOR	1.25
	SEISMIC DESIGN CATEGORY	C
MASONRY WALLS DEAD LOADS -	8" CMU	60 P.S.F.
	4" CMU	40 P.S.F.
ALLOWABLE SOIL PRESSURES -		2,000 P.S.F. (BUILDING FOUNDATIONS) 4,000 P.S.F. (TANK BASES)

INSTALLATION STEPS

1. CLEAN TIE HOLE AND MECHANICALLY ROUGHEN SURFACE USING WIRE BRUSH OR SAND BLAST.
2. DRIVE IN A-58 SURE PLUG BY DAYTON SUPERIOR OR X-PLUG BY GREENSTREAK PER MANUFACTURERS RECOMMENDATIONS TO CENTER OF WALL.
3. COAT HOLE WITH BONDING AGENT PER SPECIFICATIONS AND DRYPACK NON-SHRINK GROUT ON BOTH SIDES OF PLUG.

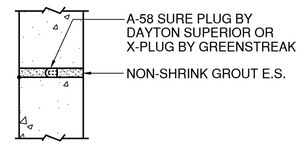

C3 REMOVABLE FORM TIE PATCHING DETAIL
NO SCALE

UNFORMED CONCRETE SURFACE FINISHES

1. BUILDING FLOORS SHALL RECEIVE A STEEL TROWEL FINISH AND SHALL BE SLOPED TO DRAIN. IN AREAS THAT ARE NOT SLOPED TO DRAIN, FLOOR SHALL MEET THE REQUIREMENTS OF A FLAT FLOOR AS DEFINED IN ACI 117 LATEST EDITION.
2. EXTERIOR SLABS SHALL RECEIVE A LIGHT BROOM FINISH AND SHALL SLOPE TO DRAIN WHERE NOTED. IN AREAS THAT ARE NOT SLOPED TO DRAIN, FLOOR SHALL MEET THE REQUIREMENTS OF A FLAT FLOOR AS DEFINED IN ACI 117 LATEST EDITION.
3. ALL OTHER SLABS, INCLUDING SLABS THAT ARE SUBMERGED DURING NORMAL OPERATION, SHALL RECEIVE A FLOAT FINISH AND MEET THE REQUIREMENTS OF A CONVENTIONAL FLOOR AS DEFINED IN ACI 117 LATEST EDITION.

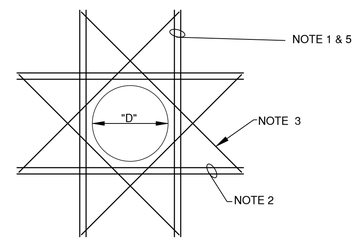

FOR "D" < 24"

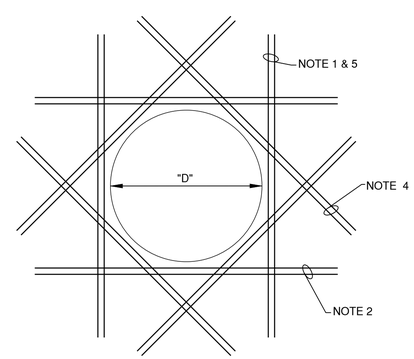

FOR "D" > 24"

A3 ADDITIONAL REINFORCING
NO SCALE

ADDITIONAL REINFORCING GUIDELINES

1. SIZE OF ADDITIONAL VERTICAL REINFORCING BARS SHALL MATCH ADJACENT VERTICAL REINFORCING. NUMBER OF BARS ON EACH SIDE SHALL BE HALF OF THE NUMBER OF BARS DISPLACED BY THE OPENING. FOR WALLS THICKER THAN 8", ADDITIONAL REINFORCING REQUIRED ON BOTH FACES OF THE WALL. BARS SHALL EXTEND A MINIMUM OF 2'-0" BEYOND THE EDGE OF THE OPENING. MINIMUM REINFORCING SHALL BE 2- #5 BARS.
2. SIZE OF ADDITIONAL HORIZONTAL REINFORCING BARS SHALL MATCH ADJACENT HORIZONTAL REINFORCING. NUMBER OF BARS ON EACH SIDE SHALL BE HALF OF THE NUMBER OF BARS DISPLACED BY THE OPENING. FOR WALLS THICKER THAN 8", ADDITIONAL REINFORCING REQUIRED ON BOTH FACES OF THE WALL. BARS SHALL EXTEND A MINIMUM OF 2'-0" BEYOND THE EDGE OF THE OPENING. MINIMUM REINFORCING SHALL BE 2- #5 BARS.
3. PROVIDE 4 -#5 DIAGONAL BARS EACH FACE. BARS SHALL EXTEND A MINIMUM OF 2'-0" BEYOND THE EDGE OF THE OPENING.
4. PROVIDE 8- #5 DIAGONAL BARS EACH FACE. BARS SHALL EXTEND A MINIMUM OF 2'-0" BEYOND THE EDGE OF THE OPENING.
5. IN LOCATIONS WHERE THE OPENING IS LESS THAN 2'-0" FROM THE BOTTOM OF THE WALL, THE ADDITIONAL VERTICAL BARS SHALL EXTEND INTO THE BASE AND TERMINATE WITH A STANDARD 90° HOOK IN BASE SLAB.

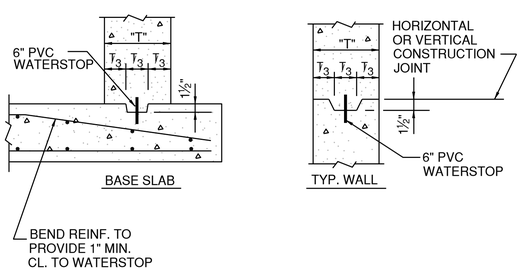

A1 KEYWAY DETAILS
NO SCALE

CMT

CONSULTANTS

OWNER

MATTOON
MATTOON, ILLINOIS: *Working Together to Build the Future*

CITY OF MATTOON

MATTOON, ILLINOIS

MARK	DATE	DESCRIPTION

PROJECT NO:	12078-03-00
CAD DWG FILE:	120780300-S-002.DWG
DESIGNED BY:	JJF
DRAWN BY:	JJF/KMM
CHECKED BY:	JJF
APPROVED BY:	TKB

COPYRIGHT: CRAWFORD, MURPHY & TILLY, INC. 2015

SHEET TITLE

BUILDING DESIGN DATA AND GENERAL DETAILS

S-002

Path: J:\Mattoon\12078-03\Draw\Sheets\1-CSO Satellite Treatment\120780300-S-002.dwg
Date: Wednesday, June 17, 2015 11:47:58 AM

NOTE 1

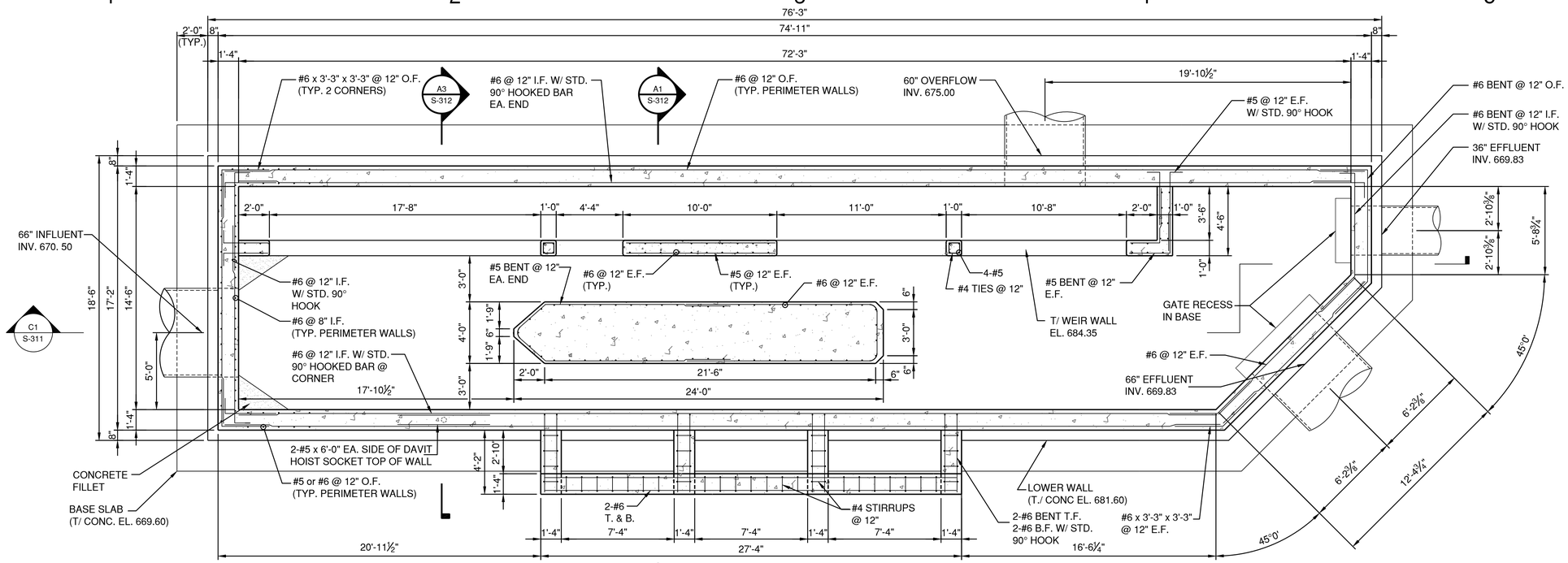

C1 WALL PLAN

1/4" = 1'-0"

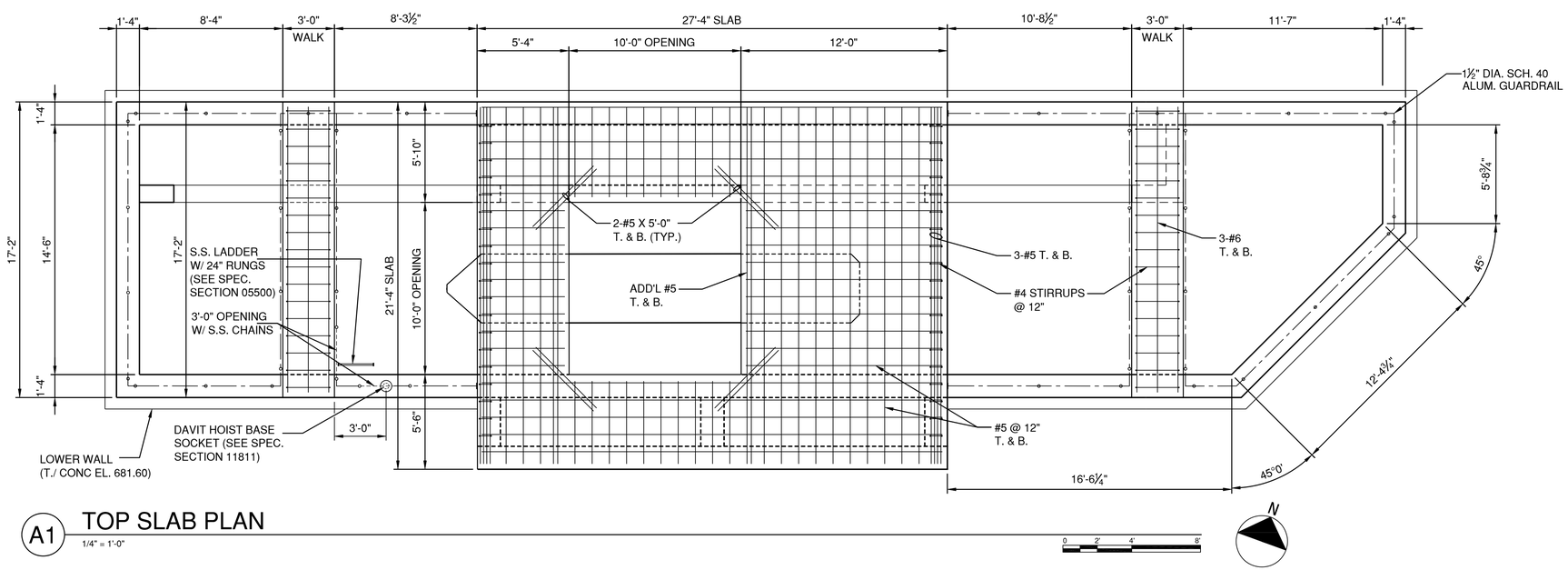

A1 TOP SLAB PLAN

1/4" = 1'-0"

CMT

License No. 184-000613

CONSULTANTS

MAY 2015

CSO SATELLITE TREATMENT FACILITY CONTRACT NO. 1

OWNER

MATTOON

MATTOON, ILLINOIS: *Working Together to Build the Future*

CITY OF MATTOON

MATTOON, ILLINOIS

MARK	DATE	DESCRIPTION

PROJECT NO:	12078-03-00
CAD DWG FILE:	120780300-S-111.DWG
DESIGNED BY:	JJF
DRAWN BY:	JJF/KMM
CHECKED BY:	JJF
APPROVED BY:	TJB

COPYRIGHT: CRAWFORD, MURPHY & TILLY, INC. 2015

SHEET TITLE

SCREEN STRUCTURE WALL PLAN

S-111

SHEET 28 OF 128

Path: J:\Mattoon\12078-03\Draw\Sheets\1-CSO Satellite Treatment\120780300-S-111.dwg
Date: Wednesday, June 17, 2015 11:48:11 AM

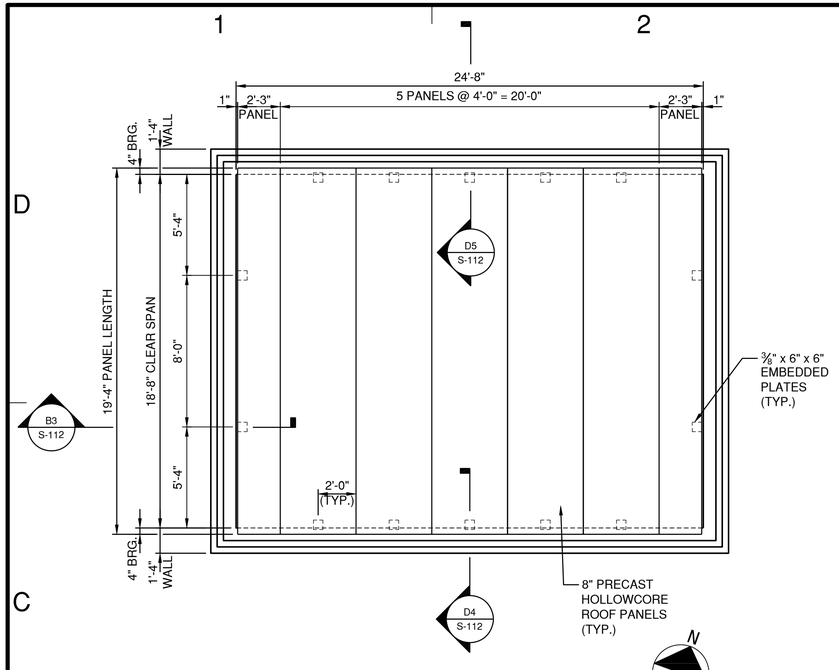

C1 ROOF FRAMING PLAN
1/4" = 1'-0"

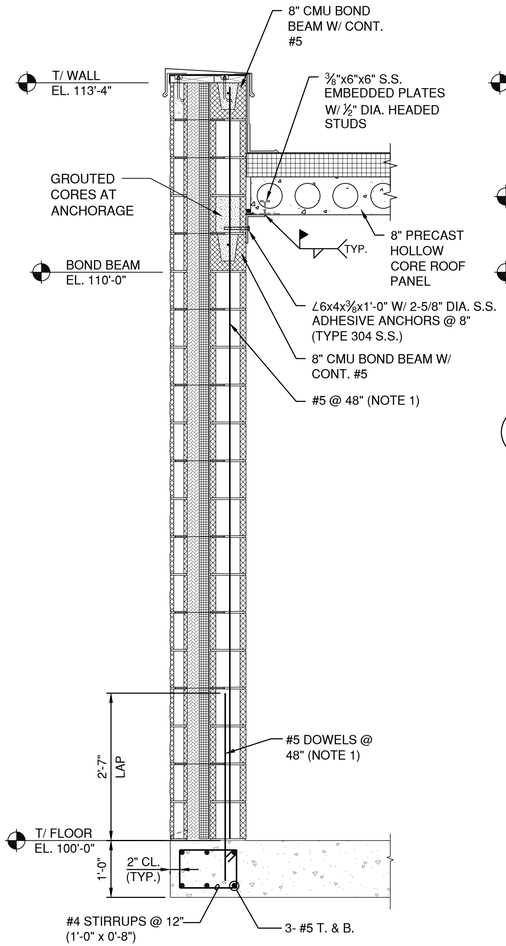

B3 WALL REINFORCING SECTION
3/4" = 1'-0"

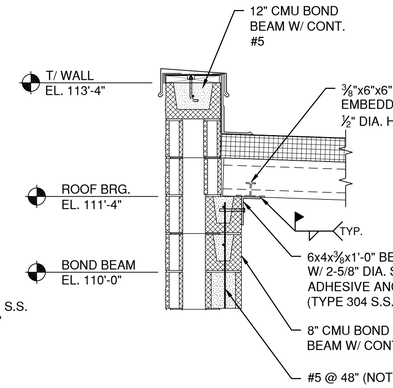

D4 SECTION
3/4" = 1'-0"

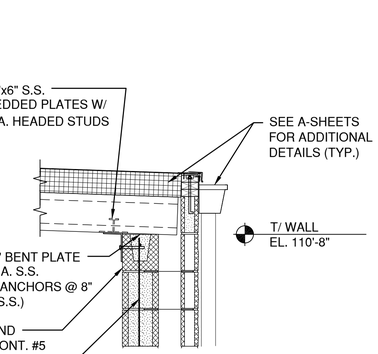

D5 SECTION
3/4" = 1'-0"

NOTES

1. IN ADDITION TO #5 @ 48" CTS., REINFORCE AND GROUT CORE FULL HEIGHT EACH SIDE OF OPENINGS, EACH SIDE OF JOINT, AND AT CORNERS
2. SEE SHEET A-112 FOR ADDITIONAL DETAILS.

CMT

License No. 184-000613

CONSULTANTS

MAY 2015

CSO SATELLITE
TREATMENT FACILITY
CONTRACT NO. 1

OWNER

MATTOON
MATTOON, ILLINOIS: *Working Together to Build the Future*

CITY OF MATTOON

MATTOON, ILLINOIS

MARK	DATE	DESCRIPTION

PROJECT NO:	12078-03-00
CAD DWG FILE:	120780300-S-112.DWG
DESIGNED BY:	JJF
DRAWN BY:	JJF/KMM
CHECKED BY:	JJF
APPROVED BY:	JJF

COPYRIGHT: CRAWFORD, MURPHY & TILLY, INC. 2015

SHEET TITLE

SCREEN BUILDING
ROOF FRAMING PLAN
AND DETAILS

S-112

Path: J:\Mattoon\12078-03\Draw\Sheets\1-CSO Satellite Treatment\120780300-S-112.dwg
Date: Wednesday, June 17, 2015 11:48:21 AM

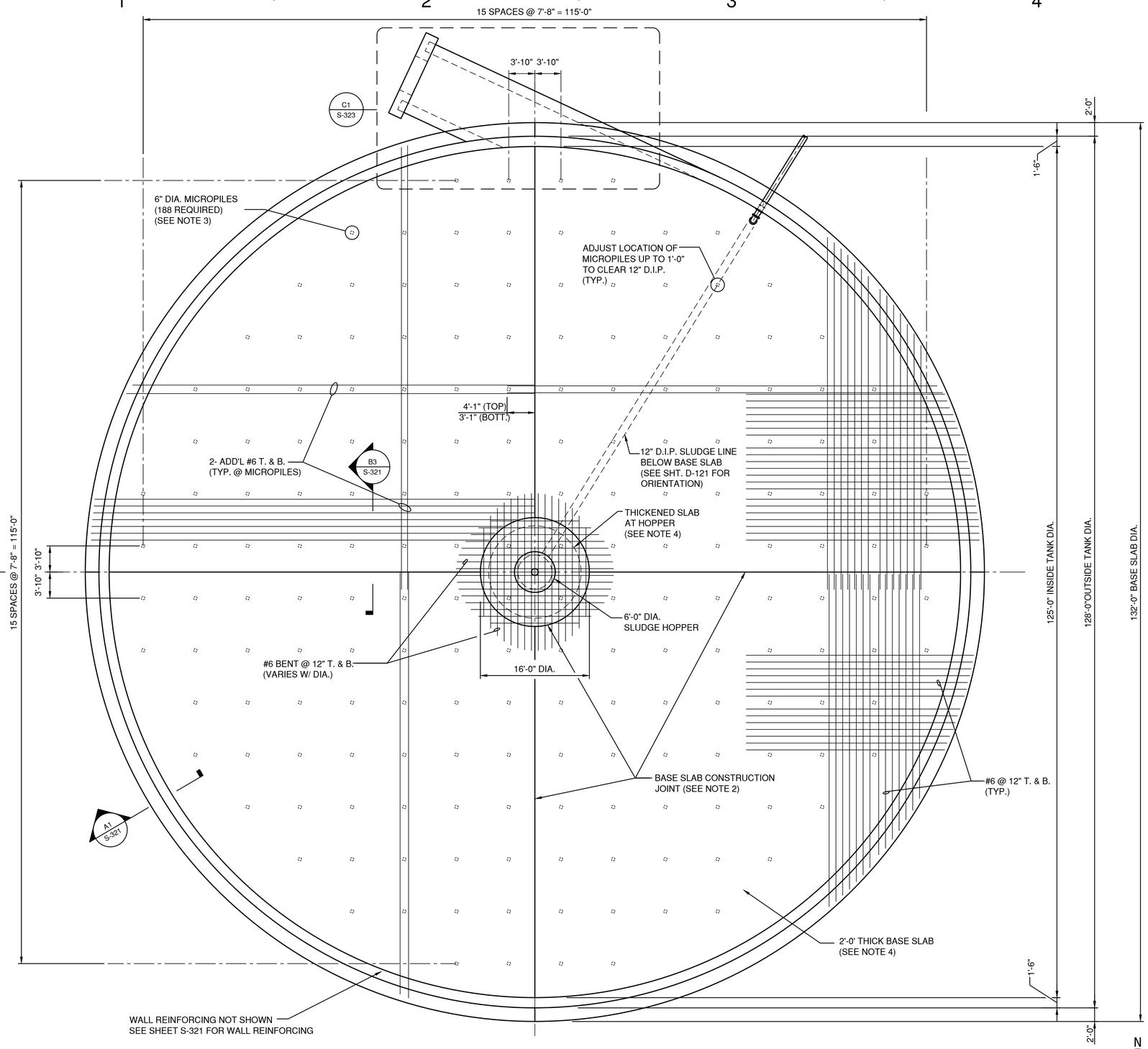

A1 FOUNDATION PLAN - MICROPILE OPTION

1/8" = 1'-0"

NOTES

1. CONTRACTOR HAS OPTION OF INSTALLING THE 6" MICROPILE FOUNDATION SYSTEM AS SHOWN ON SHEEETS S-121 & S-321 OR INSTALLING THE 36" DRILLED PIERS AS SHOWN ON SHEETS S-122 & S-322.
2. CONTRACTOR MAY SUBMIT ALTERNATE CONSTRUCTION JOINT LAYOUT TO ENGINEER FOR REVIEW. ALTERNATE JOINT LAYOUT SHALL NOT BE USED WITHOUT APPROVAL OF THE ENGINEER.
3. MICROPILE REINFORCING AND DEPTH SHALL BE DESIGNED BY THE MICROPILE SUBCONTRACTOR TO RESIST 90,000 POUNDS OF UPLIFT PER PILE. SEE SPECIFICATION SECTION 02370 FOR MICROPILE REQUIREMENTS.
4. CENTER (1ST) POUR FOR THICKENED SLAB SHALL BE PLACED USING CONCRETE MIX A. REMAINDER OF BASE SLAB SHALL BE PLACED USING CONCRETE MIX B. SEE SPECIFICATION SECTION 03300 FOR CONCRETE MIX DESIGNS AND REQUIREMENTS.

CMT

License No. 184-000613

CONSULTANTS

MAY 2015

CSO SATELLITE
TREATMENT FACILITY
CONTRACT NO. 1

OWNER

MATTOON

MATTOON, ILLINOIS: *Working Together to Build the Future*

CITY OF MATTOON

MATTOON, ILLINOIS

MARK	DATE	DESCRIPTION

PROJECT NO:	12078-03-00
CAD DWG FILE:	120780300-S-121.DWG
DESIGNED BY:	JJF
DRAWN BY:	JJF/KMM
CHECKED BY:	JJF
APPROVED BY:	TLB

COPYRIGHT: CRAWFORD, MURPHY & TILLY, INC. 2015

SHEET TITLE

FIRST FLUSH TANK
FOUNDATION PLAN

S-121

SHEET 30 OF 128

Path: J:\Mattoon\12078-03\Draw\Sheets\1-CSO Satellite Treatment\120780300-S-121.dwg
Date: Wednesday, June 17, 2015 11:48:31 AM

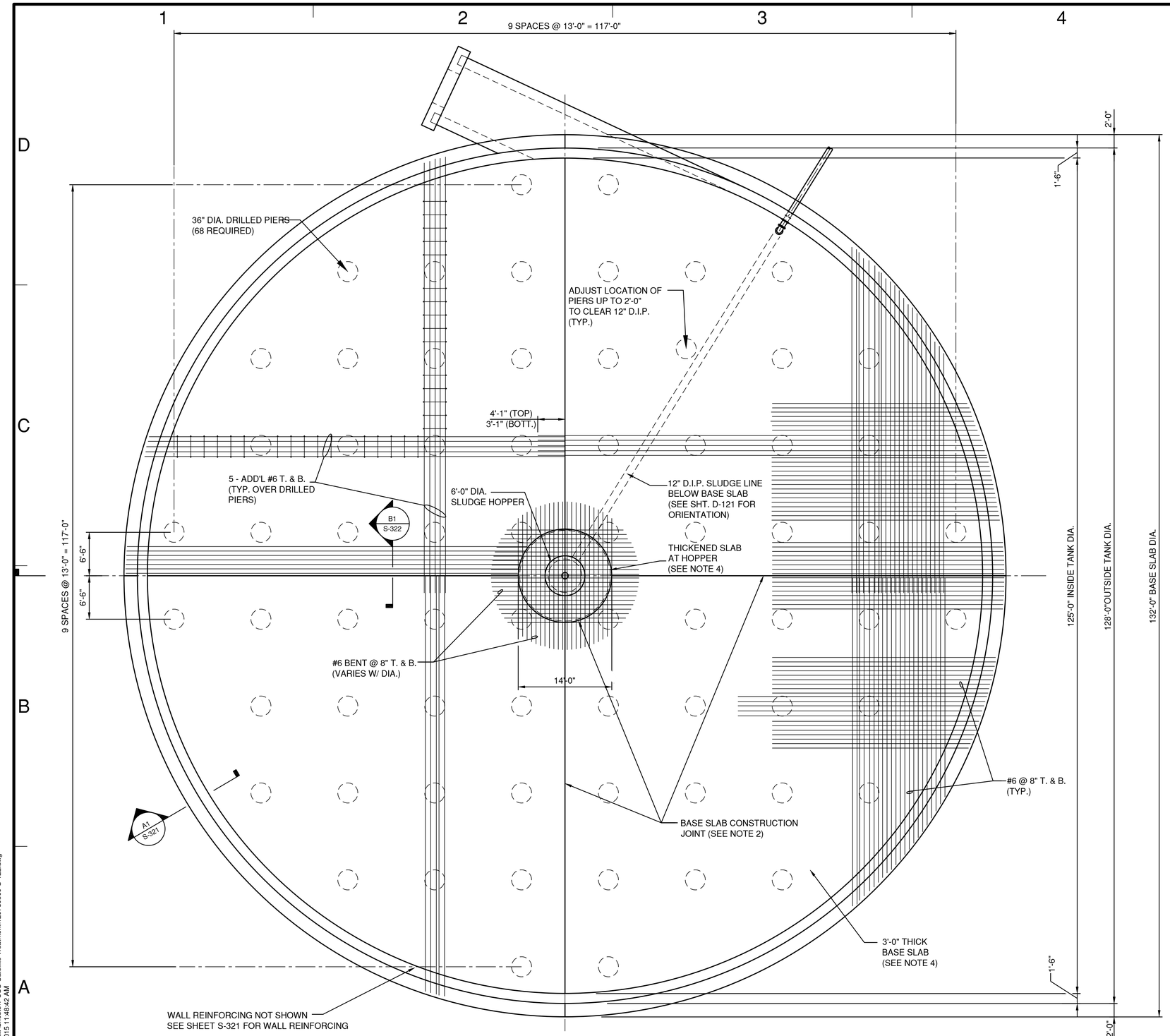

A1 FOUNDATION PLAN - DRILLED PIER OPTION

1/8"=1'-0"

NOTES

1. CONTRACTOR HAS OPTION OF INSTALLING THE 6" MICROPILE FOUNDATION SYSTEM AS SHOWN ON SHEEETS S-121 & S-321 OR INSTALLING THE 36" DRILLED PIERS AS SHOWN ON SHEETS S-122 & S-322.
2. CONTRACTOR MAY SUBMIT ALTERNATE CONSTRUCTION JOINT LAYOUT TO ENGINEER FOR REVIEW. ALTERNATE JOINT LAYOUT SHALL NOT BE USED WITHOUT APPROVAL OF THE ENGINEER.
3. SEE SPECIFICATION SECTION 02375 FOR DRILLED PIER REQUIREMENTS.
4. CENTER (1ST) POUR FOR THICKENED SLAB SHALL BE PLACED USING CONCRETE MIX A. REMAINDER OF BASE SLAB SHALL BE PLACED USING CONCRETE MIX B. SEE SPECIFICATION SECTION 03300 FOR CONCRETE MIX DESIGNS AND REQUIREMENTS.

CMT

License No. 184-000613

CONSULTANTS

MAY 2015

CSO SATELLITE
TREATMENT FACILITY
CONTRACT NO. 1

OWNER

MATTOON

MATTOON, ILLINOIS: *Working Together to Build the Future*

CITY OF MATTOON

MATTOON, ILLINOIS

MARK	DATE	DESCRIPTION

PROJECT NO:	12078-03-00
CAD DWG FILE:	120780300-S-122.DWG
DESIGNED BY:	JJF
DRAWN BY:	JJF/KMM
CHECKED BY:	JJF
APPROVED BY:	JJF

COPYRIGHT: CRAWFORD, MURPHY & TILLY, INC. 2015

SHEET TITLE

FIRST FLUSH TANK
FOUNDATION PLAN
DRILLED PIER OPTION

S-122

Path: J:\Mattoon\12078-03\Draw\Sheets\1-CSO Satellite Treatment\120780300-S-122.dwg
Date: Wednesday, June 17, 2015 11:48:42 AM

NOTES

1. BLOCK-OUT AROUND MONITORING PIPING SHALL BE FILLED WITH NS GROUT BY EUCLID CHEMICAL COMPANY, OR EQUAL IN ACCORDANCE WITH MANUFACTURER'S WRITTEN INSTRUCTIONS.

2. BASE SOCKETS FOR MIXER DAVIT CRANES SHALL BE CENTERED IN TOP OF TANK WALLS AND LINE UP WITH LIFTING EYES OF MIXER. MIXER LOCATION SHALL BE ADJUSTED IN FIELD AS NEEDED TO LINE UP WITH MIXER DAVIT CRANE. INSTALL 2-ADD'L #5 x 6'-0" EACH SIDE OF BASE SOCKETS SIMILAR TO DETAIL A5 THIS SHEET.

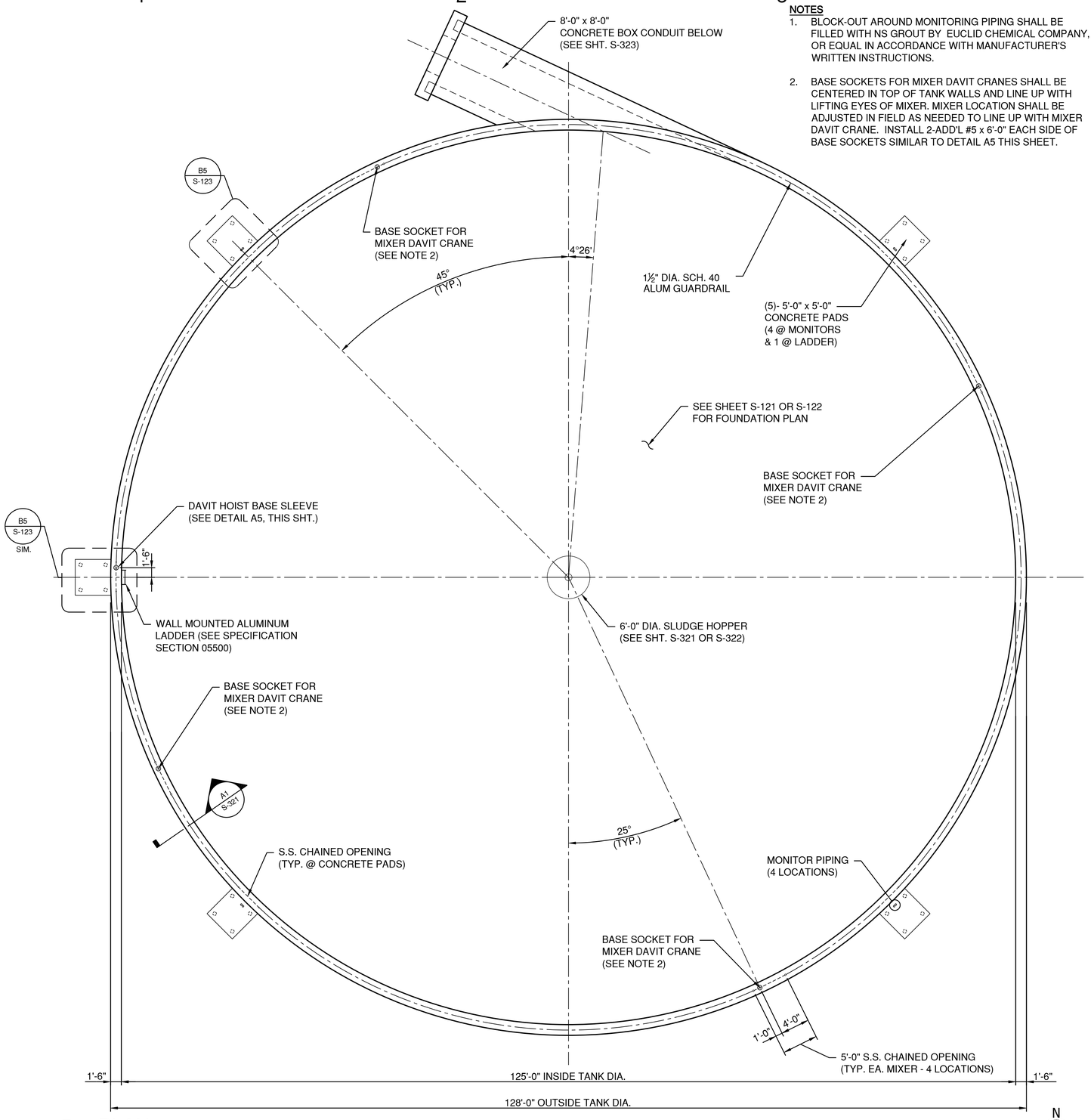

A1 PLAN
1/8" = 1'-0"

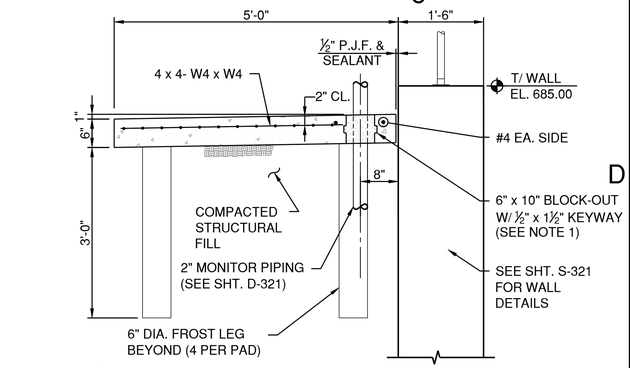

D5 DETAIL
3/4" = 1'-0"

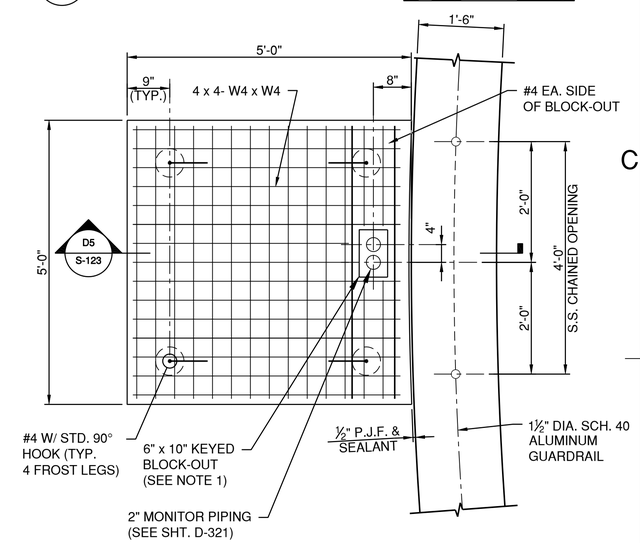

B5 DETAIL
3/4" = 1'-0"

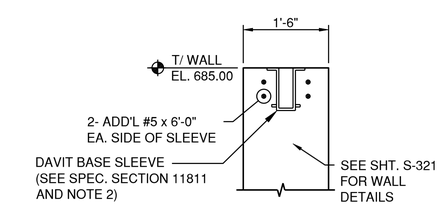

A5 DETAIL - DAVIT HOIST BASE
3/4" = 1'-0"

CMT

License No. 184-000613

CONSULTANTS

MAY 2015

CSO SATELLITE
TREATMENT FACILITY
CONTRACT NO. 1

OWNER

MATTOON
MATTOON, ILLINOIS: *Working Together to Build the Future*

CITY OF MATTOON

MATTOON, ILLINOIS

MARK	DATE	DESCRIPTION

PROJECT NO:	12078-03-00
CAD DWG FILE:	120780300-S-123.DWG
DESIGNED BY:	JJF
DRAWN BY:	JJF/KMM
CHECKED BY:	JJF
APPROVED BY:	TEB

COPYRIGHT: CRAWFORD, MURPHY & TILLY, INC. 2015

SHEET TITLE

FIRST FLUSH TANK
PLAN AND DETAILS

S-123

SHEET 32 OF 128

Path: J:\Mattoon\12078-03\Draw\Sheets\1-CSO Satellite Treatment\120780300-S-123.dwg
Date: Wednesday, June 17, 2015 11:48:53 AM

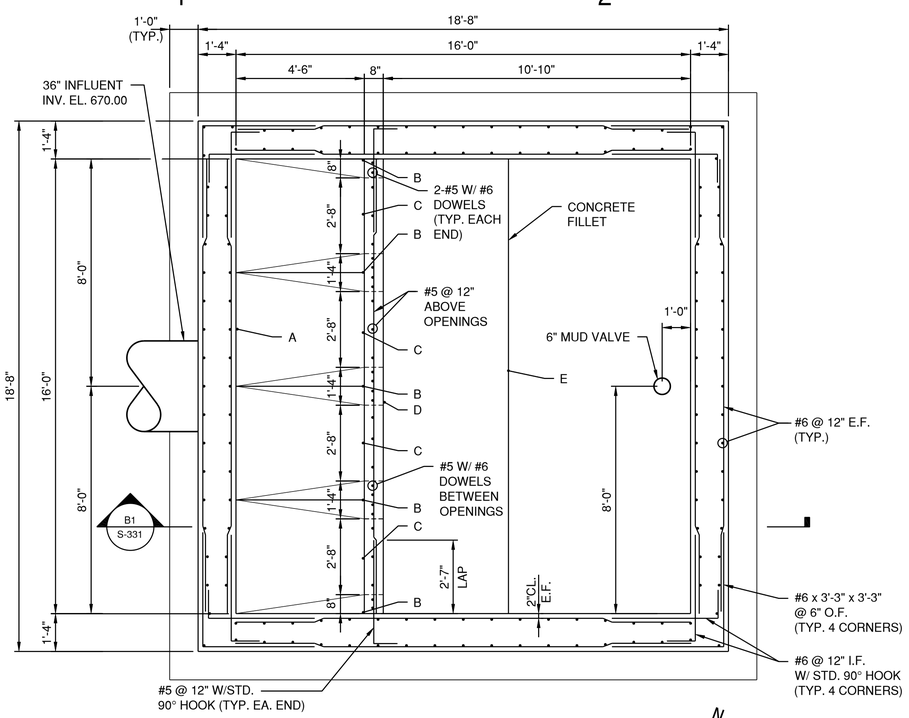

C1 PLAN BELOW EL. 677.00
3/8" = 1'-0"

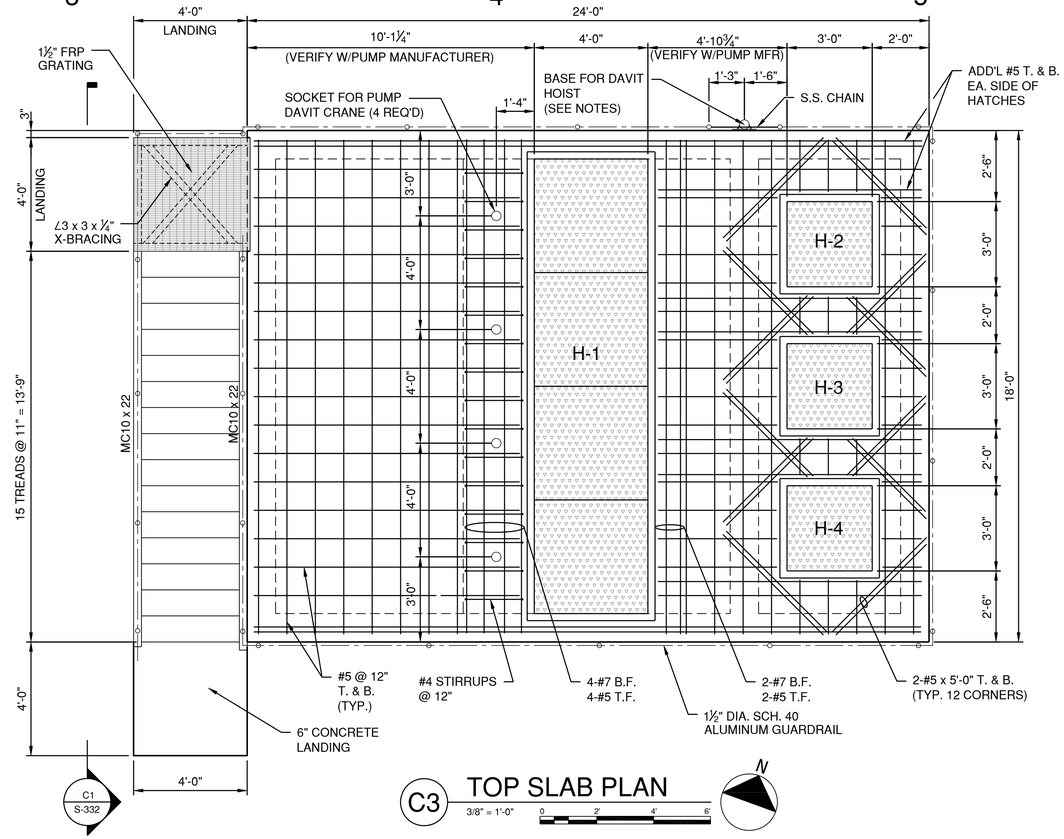

C3 TOP SLAB PLAN
3/8" = 1'-0"

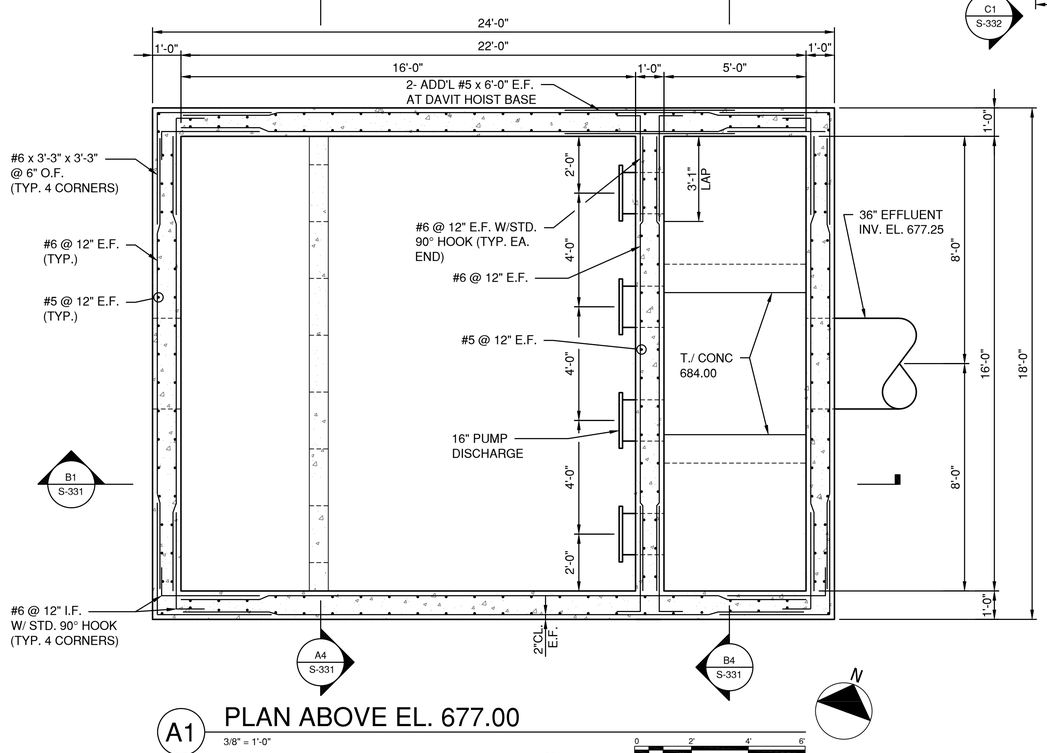

A1 PLAN ABOVE EL. 677.00
3/8" = 1'-0"

DAVIT HOIST NOTES

1. SEE SPECIFICATION 11811 FOR DAVIT HOIST REQUIREMENTS.
2. ANCHORS TO MOUNT THE DAVIT HOIST BASE SHALL DESIGNED, FURNISHED AND INSTALLED BY THE CONTRACTOR TO MEET THE MINIMUM MOUNTING REQUIREMENTS SET BY THE DAVIT HOIST MANUFACTURER. ANCHORS SHALL BE TYPE 304 STAINLESS STEEL AND MAY BE CAST IN, DRILLED IN, OR THRU BOLTS.
3. BASE ANCHORAGE SHALL BE SUBMITTED TO THE ENGINEER FOR REVIEW. CONCRETE COMPRESSIVE STRENGTH OF 4.000 PSI SHALL BE USED FOR ANCHORAGE DESIGN.

FILLET THICKNESSES

A = 10½"
B = 7¼"
C = 6¼"
D = 5⅝"
E = 1½"

CMT
License No. 184-000613
CONSULTANTS

MAY 2015

CSO SATELLITE TREATMENT FACILITY CONTRACT NO. 1

OWNER

MATTOON
MATTOON, ILLINOIS: *Working Together to Build the Future*

CITY OF MATTOON

MATTOON, ILLINOIS

MARK	DATE	DESCRIPTION

PROJECT NO:	12078-03-00
CAD DWG FILE:	120780300-S-131.DWG
DESIGNED BY:	JJF
DRAWN BY:	JJF/KMM
CHECKED BY:	JJF
APPROVED BY:	TKB

COPYRIGHT: CRAWFORD, MURPHY & TILLY, INC. 2015

SHEET TITLE
INFLUENT PUMP STATION WALL & TOP SLAB PLAN

S-131

SHEET 33 OF 128

Path: J:\Mattoon\12078-03\Draw\Sheets\1-CSO Satellite Treatment\120780300-S-131.dwg
Date: Wednesday, June 17, 2015 11:49:05 AM

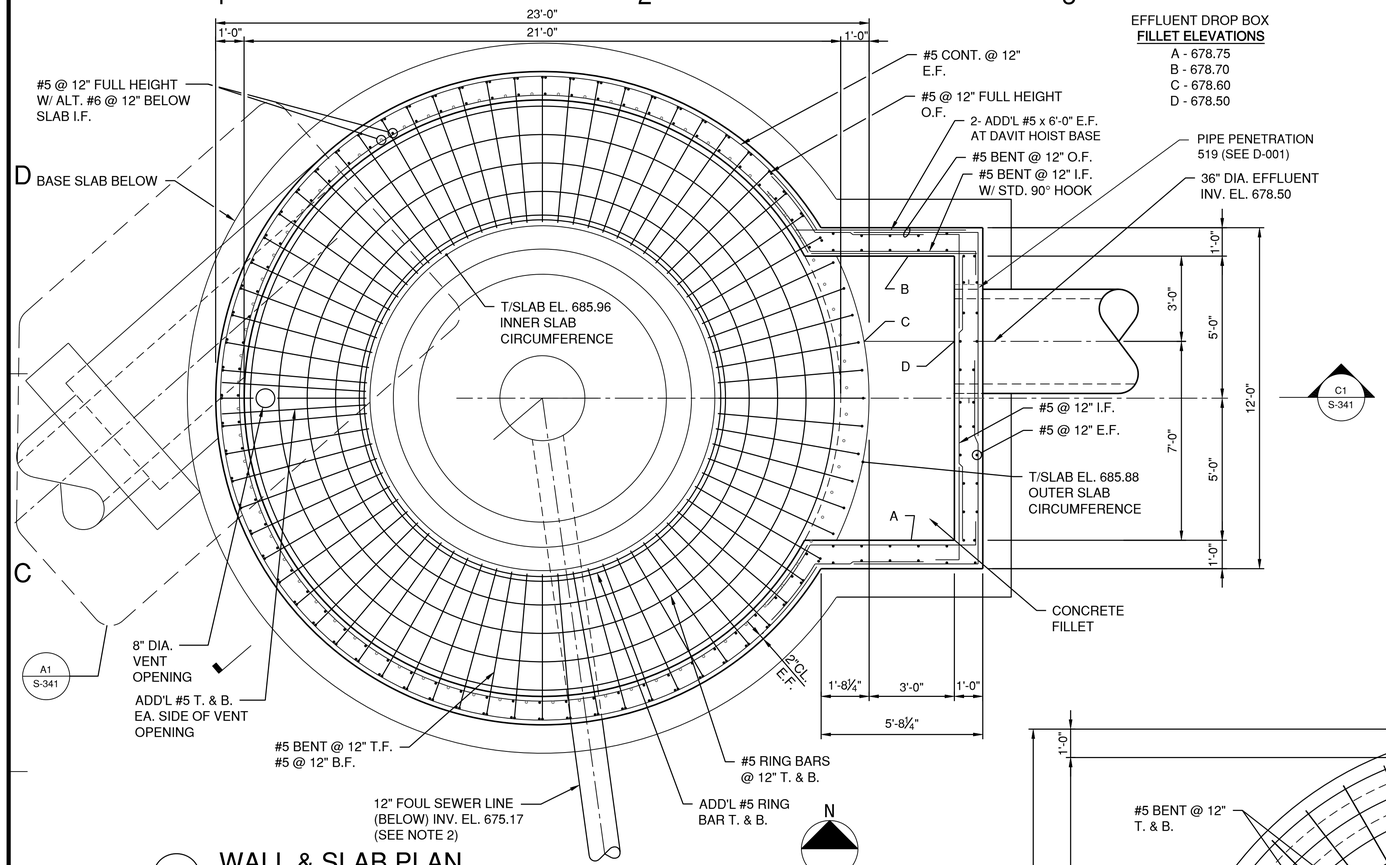

C1 WALL & SLAB PLAN

3/8" = 1'-0"

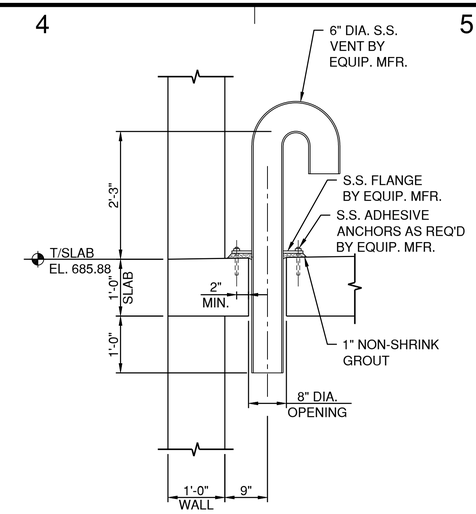

C4 VENT DETAIL

3/4" = 1'-0"

EFFLUENT DROP BOX
FILLET ELEVATIONS
A - 678.75
B - 678.70
C - 678.60
D - 678.50

NOTES

1. SEE SHEET D-141 FOR PIPING ORIENTATION.
2. PROVIDE PIPE SUPPORTS UNDER 12" FOUL SEWER LINE TO SUPPORT PIPE DURING CONCRETE FILLET PLACEMENT.

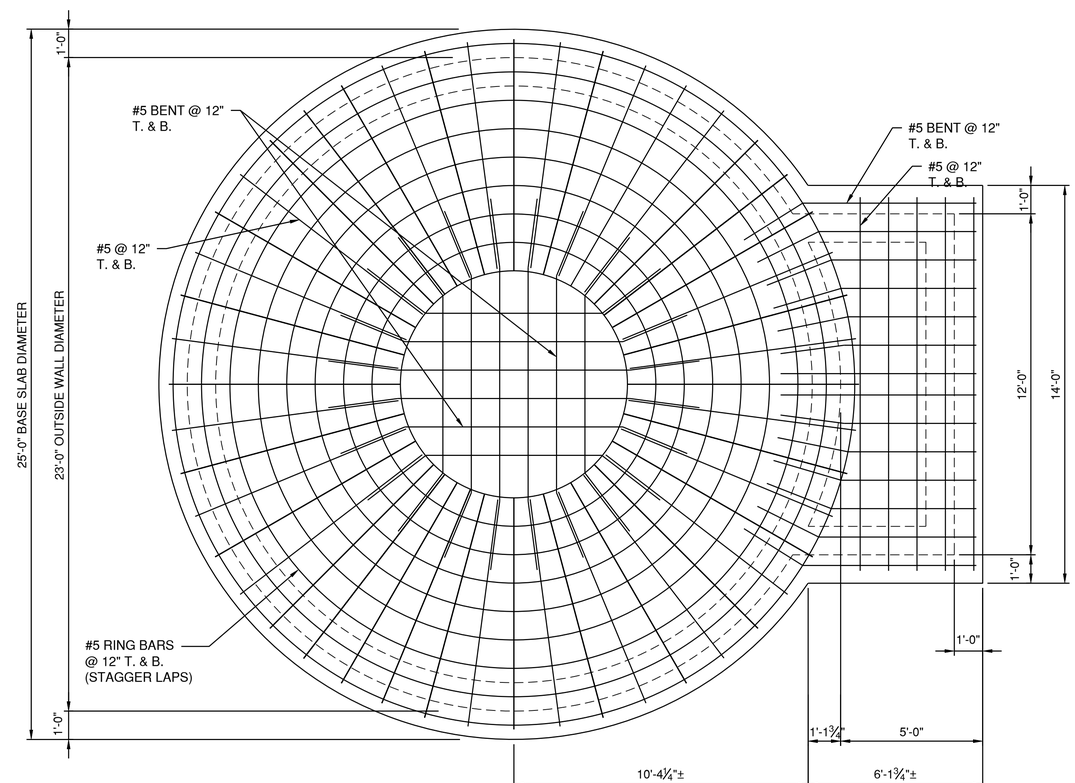

A3 BASE SLAB PLAN

3/8" = 1'-0"

CMT

License No. 184-000613

CONSULTANTS

MAY 2015

CSO SATELLITE TREATMENT FACILITY CONTRACT NO. 1

OWNER

MATTOON

MATTOON, ILLINOIS: *Working Together to Build the Future*

CITY OF MATTOON

MATTOON, ILLINOIS

MARK	DATE	DESCRIPTION

PROJECT NO:	12078-03-00
CAD DWG FILE:	120780300-S-141.DWG
DESIGNED BY:	JJF
DRAWN BY:	JJF/KMM
CHECKED BY:	JJF
APPROVED BY:	TKB

COPYRIGHT: CRAWFORD, MURPHY & TILLY, INC. 2015

SHEET TITLE

SWIRL CONCENTRATOR BASE AND WALL PLAN

S-141

SHEET 34 OF 128

Path: J:\Mattoon\12078-03\Draw\Sheets\1-CSO Satellite Treatment\120780300-S-141.dwg
Date: Wednesday, June 17, 2015 11:49:17 AM

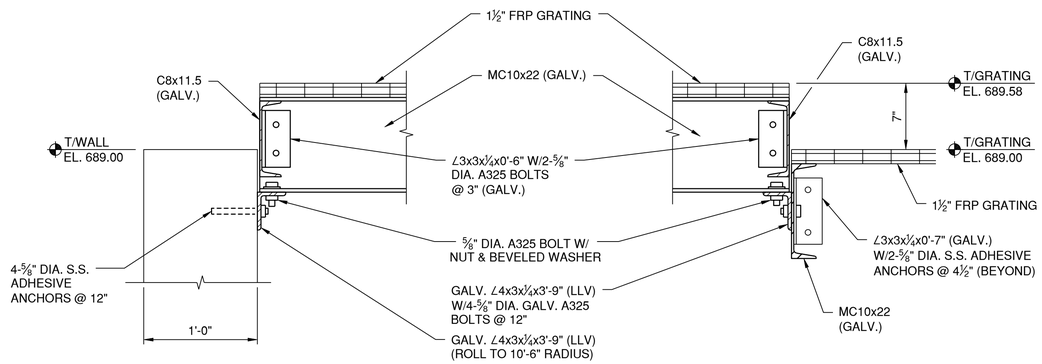

D1 DETAIL
1 1/2"=1'-0"

D2 DETAIL
1 1/2"=1'-0"

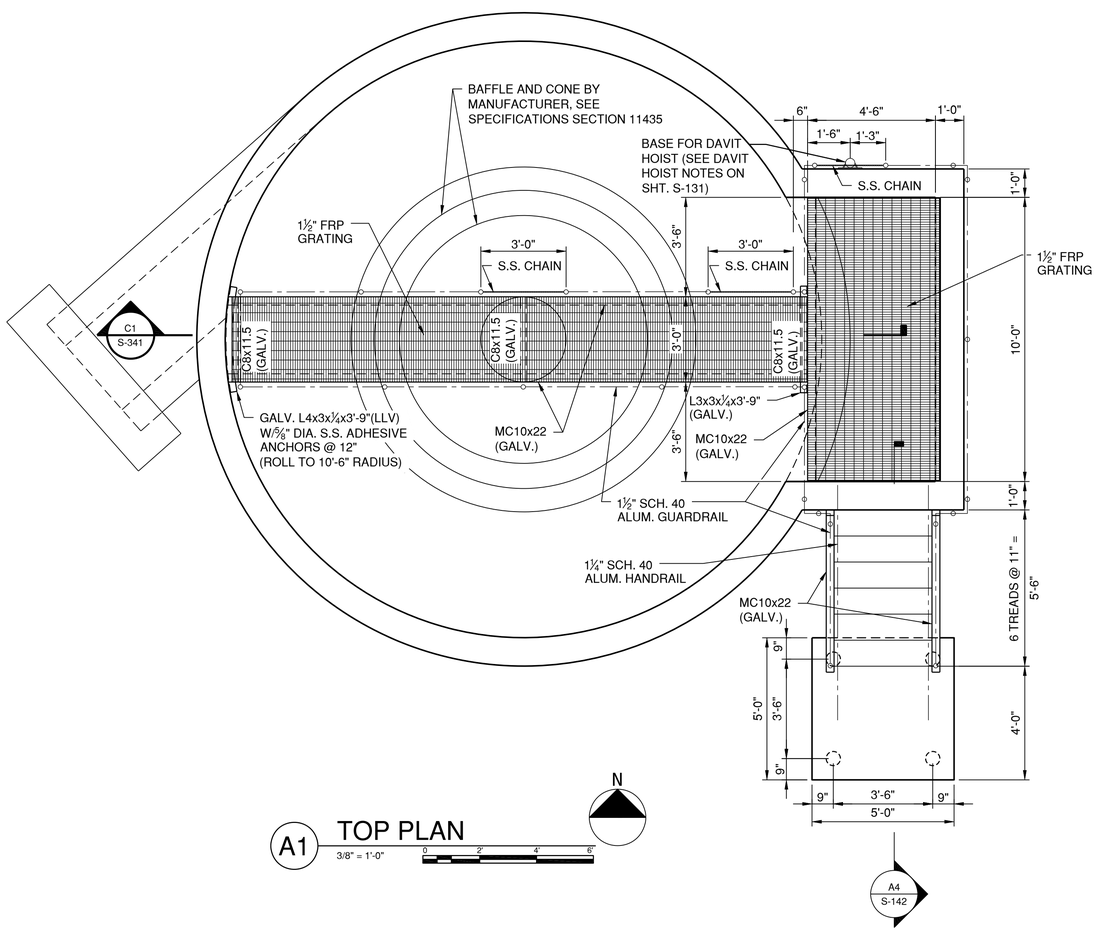

A1 TOP PLAN
3/8" = 1'-0"

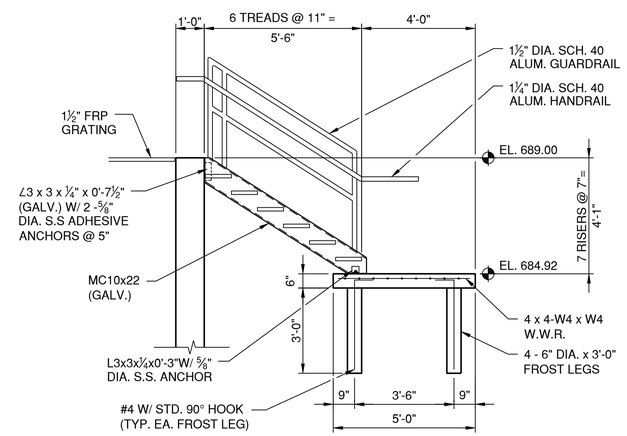

A4 STAIR SECTION
3/8" = 1'-0"

CMT

License No. 184-000613

CONSULTANTS

MAY 2015

CSO SATELLITE TREATMENT FACILITY CONTRACT NO. 1

OWNER

MATTOON
MATTOON, ILLINOIS: *Working Together to Build the Future*

CITY OF MATTOON

MATTOON, ILLINOIS

MARK	DATE	DESCRIPTION

PROJECT NO:	12078-03-00
CAD DWG FILE:	120780300-S-142.DWG
DESIGNED BY:	JJF
DRAWN BY:	JJF/KMM
CHECKED BY:	JJF
APPROVED BY:	TJB

COPYRIGHT: CRAWFORD, MURPHY & TILLY, INC. 2015

SHEET TITLE

SWIRL CONCENTRATOR TOP PLAN & DETAILS

S-142

SHEET 35 OF 128

Path: J:\Mattoon\12078-03\Draw\Sheets\1-CSO Satellite Treatment\120780300-S-142.dwg
Date: Wednesday, June 17, 2015 11:49:28 AM

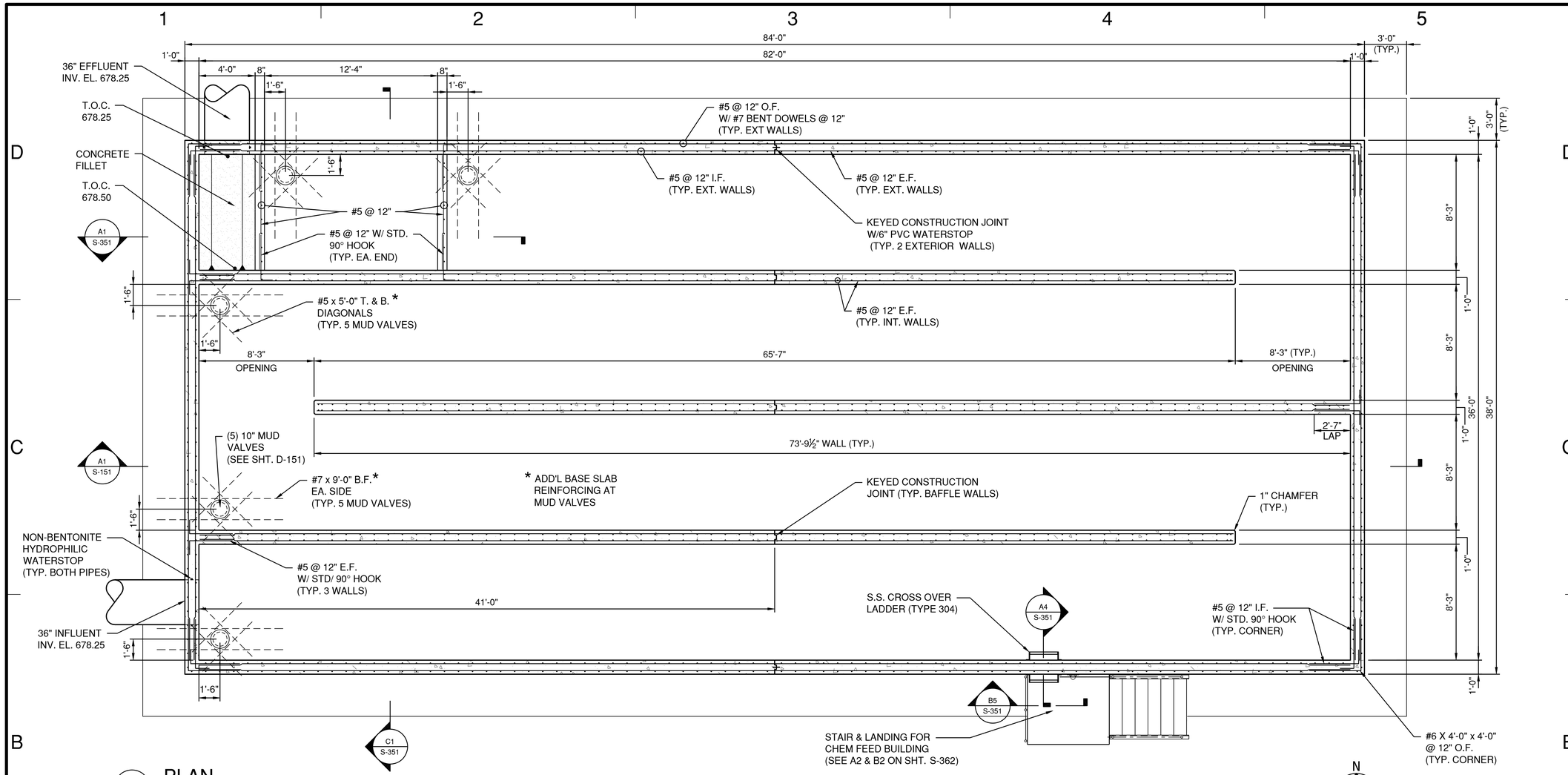

B1 PLAN
1/4" = 1'-0"

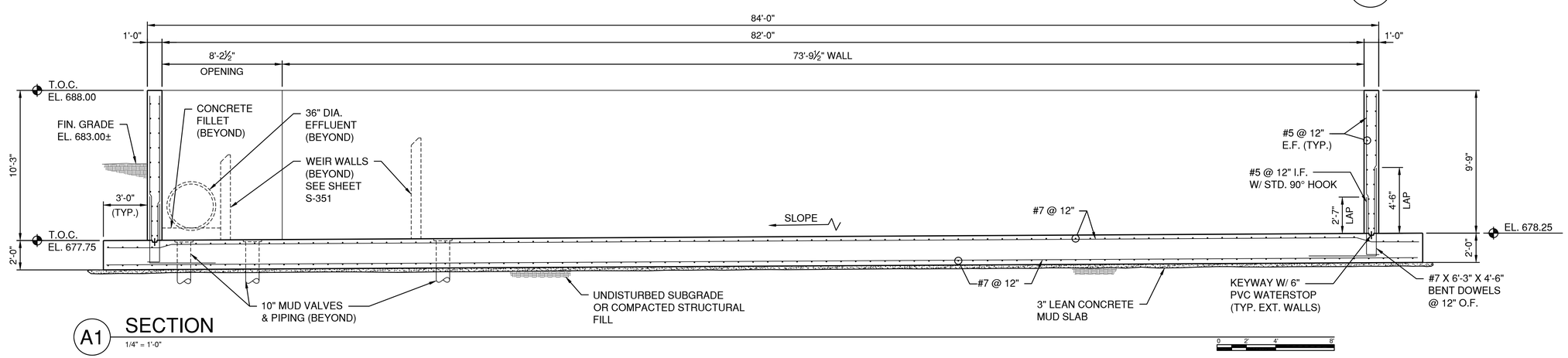

A1 SECTION
1/4" = 1'-0"

CMT

License No. 184-000613

CONSULTANTS

MAY 2015

CSO SATELLITE TREATMENT FACILITY CONTRACT NO. 1

OWNER

MATTOON
MATTOON, ILLINOIS: *Working Together to Build the Future*

CITY OF MATTOON

MATTOON, ILLINOIS

MARK	DATE	DESCRIPTION

PROJECT NO:	12078-03-00
CAD DWG FILE:	120780300-S-151.DWG
DESIGNED BY:	JJF
DRAWN BY:	JJF/KMM
CHECKED BY:	JJF
APPROVED BY:	TLB

COPYRIGHT: CRAWFORD, MURPHY & TILLY, INC. 2015

SHEET TITLE

CHLORINE CONTACT TANK PLAN & SECTION

S-151

SHEET 36 OF 128

Path: J:\Mattoon\12078-03\Draw\Sheets\1-CSO Satellite Treatment\120780300-S-151.dwg
Date: Wednesday, June 17, 2015 11:49:39 AM

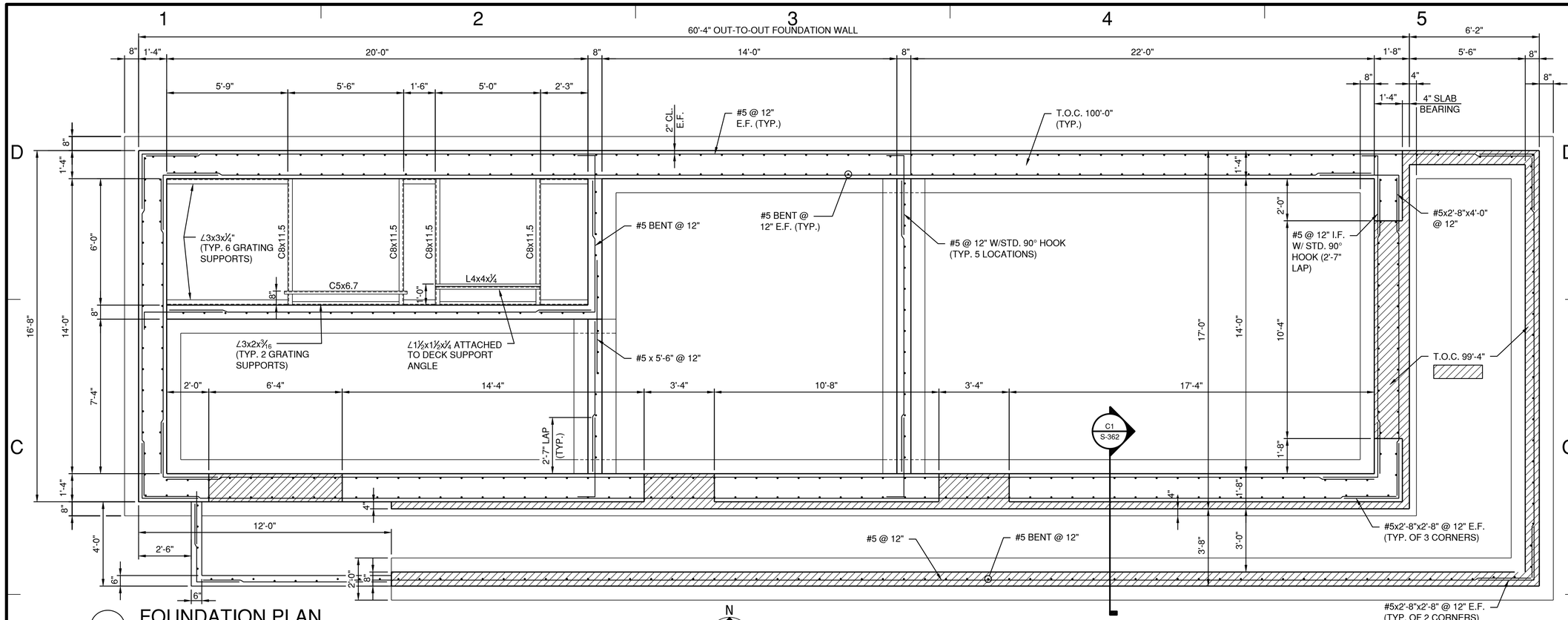

C1 FOUNDATION PLAN

3/8" = 1'-0"

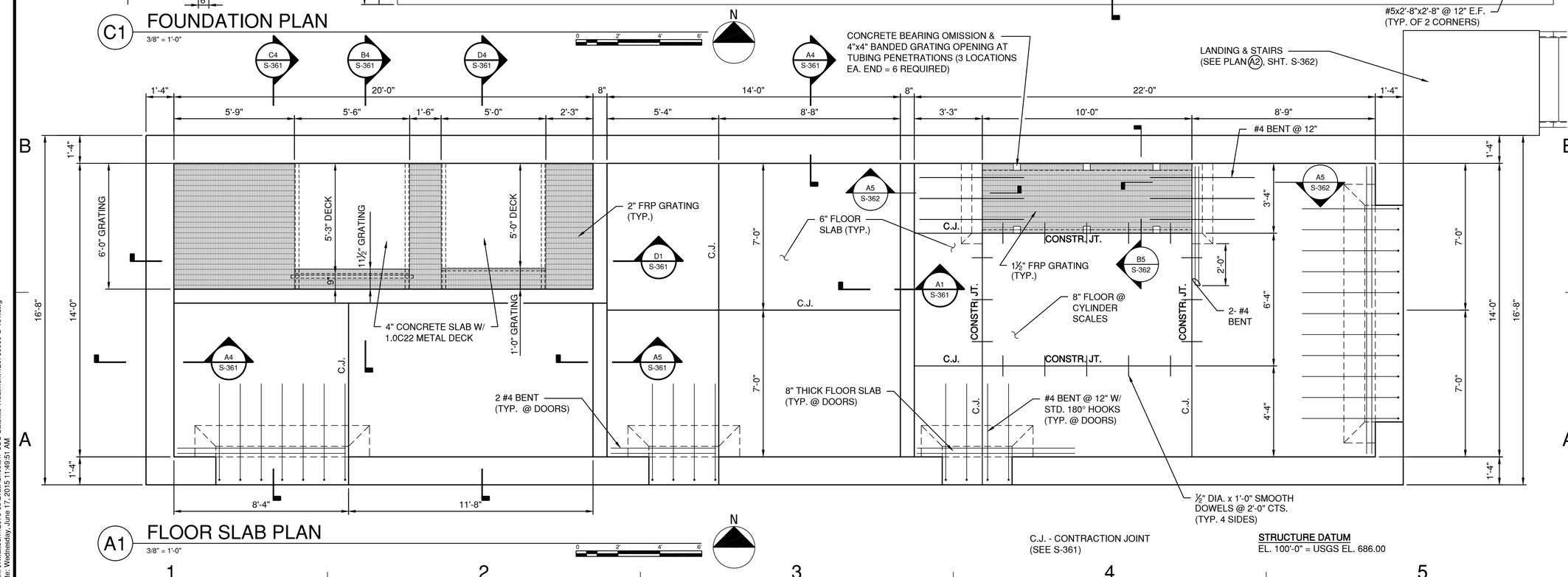

A1 FLOOR SLAB PLAN

3/8" = 1'-0"

C.J. - CONTRACTION JOINT (SEE S-361)

STRUCTURE DATUM
EL. 100'-0" = USGS EL. 686.00

CMT

License No. 184-000613

CONSULTANTS

MAY 2015

CSO SATELLITE TREATMENT FACILITY CONTRACT NO. 1

OWNER

MATTOON

MATTOON, ILLINOIS: *Working Together to Build the Future*

CITY OF MATTOON

MATTOON, ILLINOIS

MARK	DATE	DESCRIPTION

PROJECT NO:	12078-03-00
CAD DWG FILE:	120780300-S-161.DWG
DESIGNED BY:	JJF
DRAWN BY:	JJF/KMM
CHECKED BY:	JJF
APPROVED BY:	

COPYRIGHT: CRAWFORD, MURPHY & TILLY, INC. 2015

SHEET TITLE

CHEMICAL FEED BUILDING FOUNDATION PLAN

S-161

SHEET 37 OF 128

Path: J:\Mattoon\12078-03\Draw\Sheets\1-CSO Satellite Treatment\120780300-S-161.dwg
Date: Wednesday, June 17, 2015 11:49:51 AM

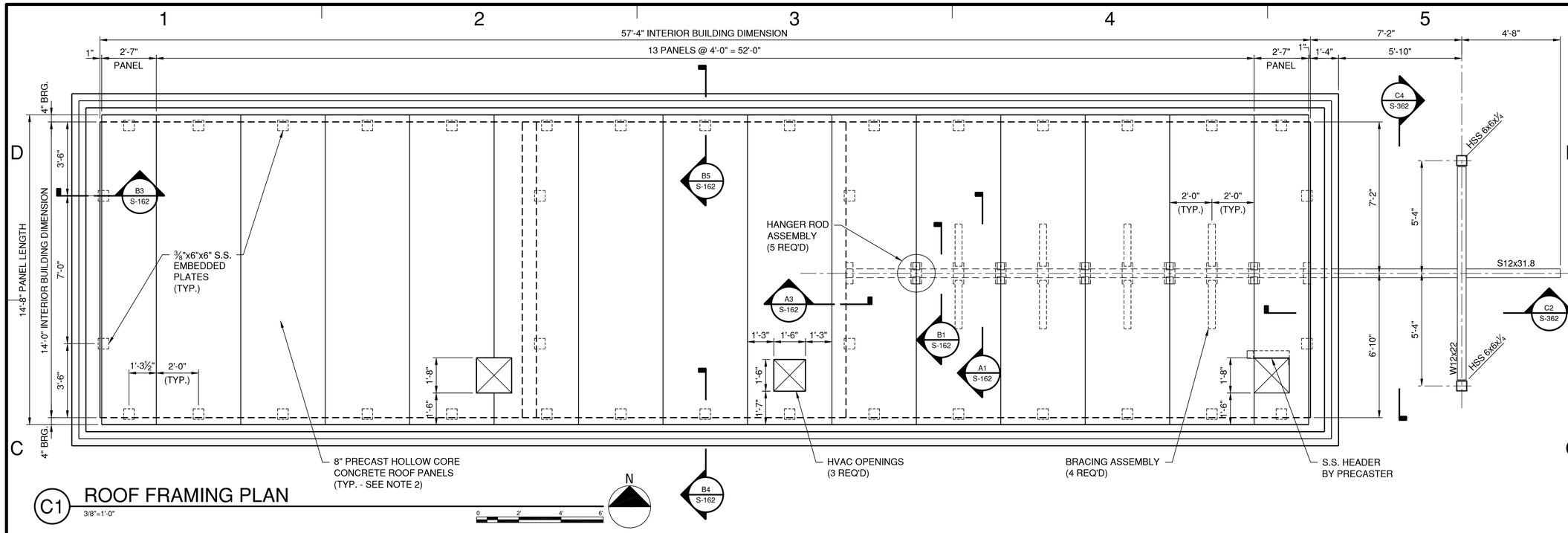

C1 ROOF FRAMING PLAN
3/8"=1'-0"

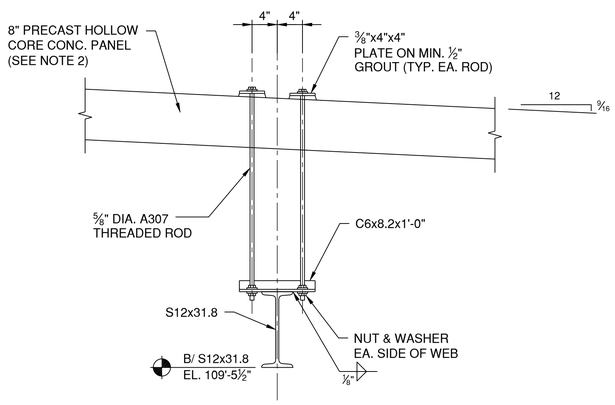

B1 SECTION
1"=1'-0"

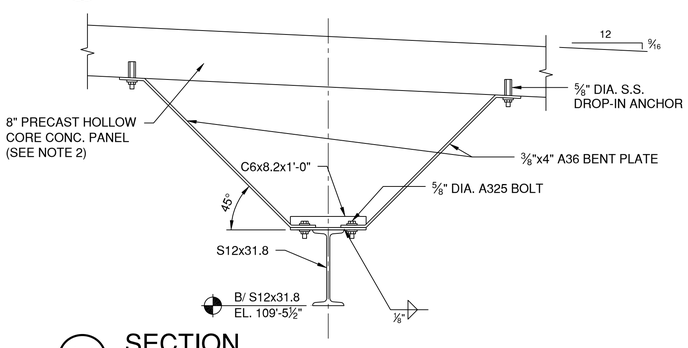

A1 SECTION
1"=1'-0"

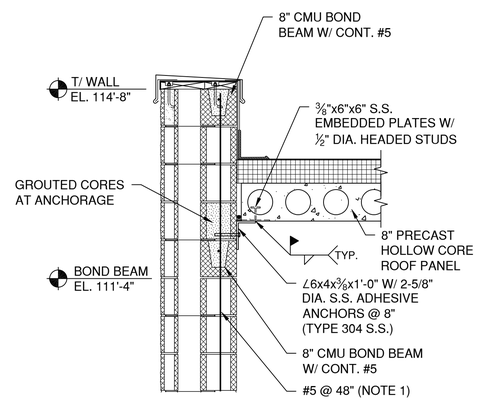

B3 SECTION
3/4"=1'-0"

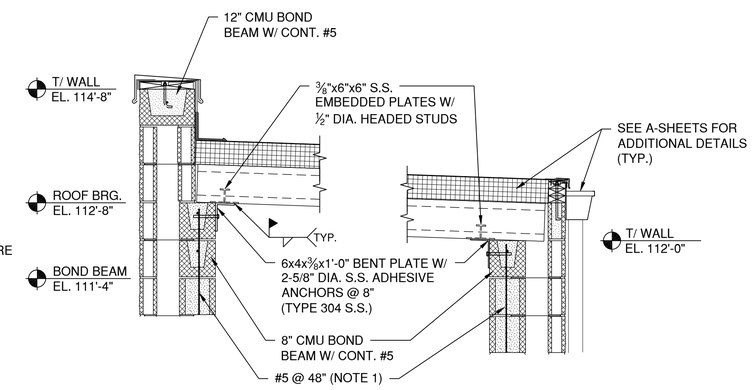

B4 SECTION
3/4"=1'-0"

B5 SECTION
3/4"=1'-0"

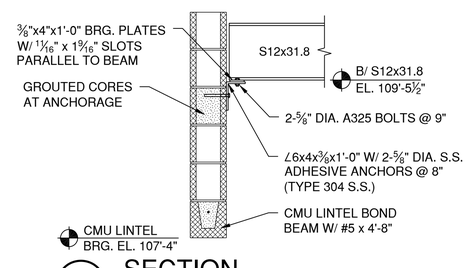

A3 SECTION
3/4"=1'-0"

NOTES

1. IN ADDITION TO #5 @ 48" CTS., REINFORCE AND GROUT CORES FULL HEIGHT EACH SIDE OF OPENINGS, EACH SIDE OF JOINT, AND AT CORNERS.
2. WHERE PRECAST HOLLOW CORE ROOF PANELS ARE SUPPORTING MONORAIL SUPPORT ASSEMBLIES, A MONORAIL LIVE LOAD OF 6.5 KIPS SHALL BE INCLUDED IN THE DESIGN OF THE PANELS IN ADDITION TO THE UNIFORM DEAD LOADS NOTED ON SHEET S-002. THE ADDITIONAL LOAD SHALL BE APPLIED TO THE EDGE OF THE PANELS, BUT MAY BE DISTRIBUTED EVENLY BETWEEN ADJACENT PANELS.

CMT
License No. 184-000613
CONSULTANTS

MAY 2015

CSO SATELLITE TREATMENT FACILITY CONTRACT NO. 1

OWNER

MATTOON
MATTOON, ILLINOIS: *Working Together to Build the Future*

CITY OF MATTOON

MATTOON, ILLINOIS

MARK	DATE	DESCRIPTION

PROJECT NO:	12078-03-00
CAD DWG FILE:	120780300-S-162.DWG
DESIGNED BY:	JJF
DRAWN BY:	JJF/KMM
CHECKED BY:	JJF
APPROVED BY:	
COPYRIGHT:	CRAWFORD, MURPHY & TILLY, INC. 2015

SHEET TITLE

CHEMICAL FEED BUILDING ROOF PLAN & DETAILS

S-162

SHEET 38 OF 128

Path: J:\Mattoon\12078-03\Draw\Sheets\1-CSO Satellite Treatment\120780300-S-162.dwg
Date: Wednesday, June 17, 2015 11:50:02 AM

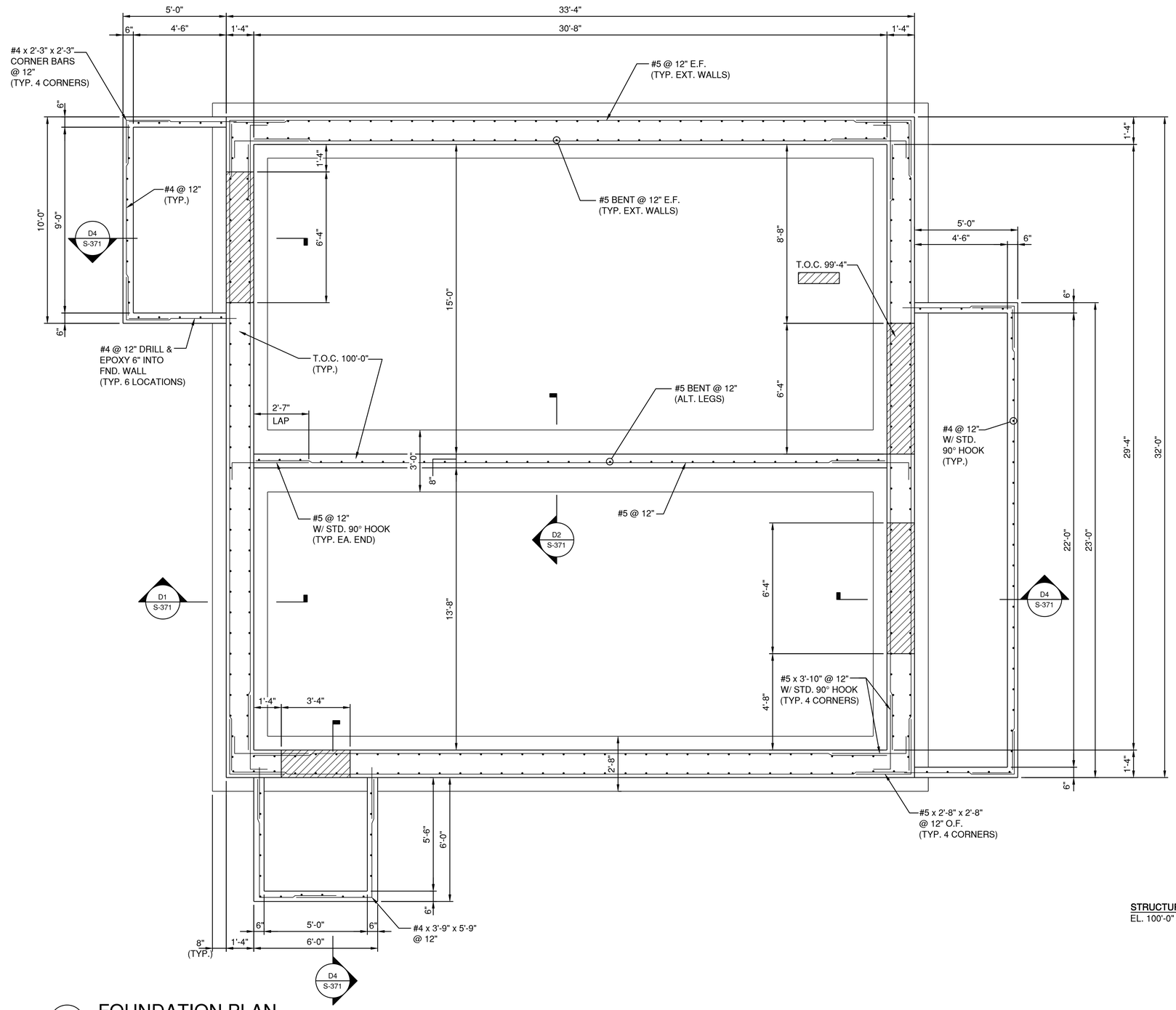

A1 FOUNDATION PLAN

3/8" = 1'-0"

STRUCTURE DATUM
EL. 100'-0" = USGS EL. 684.50

CMT

License No. 184-000613

CONSULTANTS

MAY 2015

CSO SATELLITE
TREATMENT FACILITY
CONTRACT NO. 1

OWNER

MATTOON

MATTOON, ILLINOIS: *Working Together to Build the Future*

CITY OF MATTOON

MATTOON, ILLINOIS

MARK	DATE	DESCRIPTION

PROJECT NO:	12078-03-00
CAD DWG FILE:	120780300-S-171.DWG
DESIGNED BY:	JJF
DRAWN BY:	JJF/KMM
CHECKED BY:	JJF
APPROVED BY:	TKB

COPYRIGHT: CRAWFORD, MURPHY & TILLY, INC. 2015

SHEET TITLE

BLOWER-ELECTRICAL
BUILDING
FOUNDATION PLAN

S-171

SHEET 39 OF 128

Path: J:\Mattoon\12078-03\Draw\Sheets\1-CSO Satellite Treatment\120780300-S-171.dwg
Date: Wednesday, June 17, 2015 11:50:12 AM

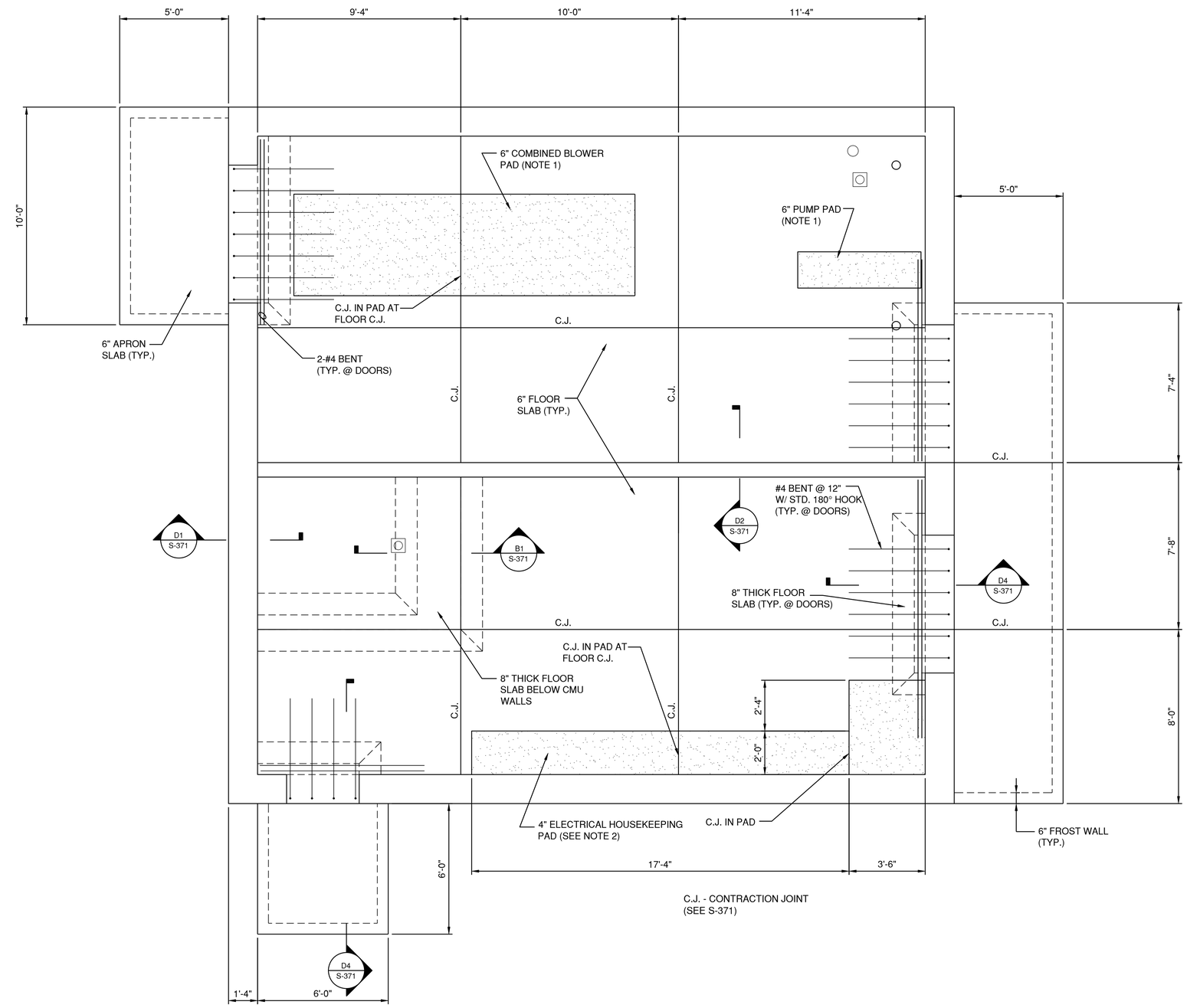

A1 FLOOR SLAB PLAN

3/8" = 1'-0"

NOTES

1. PAD SHALL EXTEND 4" BEYOND EQUIPMENT BASES. SEE SECTION B3 ON SHEET S-371 FOR DETAILS.
2. SEE SECTION A3 ON SHEET S-371 FOR DETAILS.

CMT

License No. 184-000613

CONSULTANTS

MAY 2015

CSO SATELLITE TREATMENT FACILITY CONTRACT NO. 1

OWNER

MATTOON

MATTOON, ILLINOIS: *Working Together to Build the Future*

CITY OF MATTOON

MATTOON, ILLINOIS

MARK	DATE	DESCRIPTION

PROJECT NO:	12078-03-00
CAD DWG FILE:	120780300-S-172.DWG
DESIGNED BY:	JJF
DRAWN BY:	JJF/KMM
CHECKED BY:	JJF
APPROVED BY:	KMM

COPYRIGHT: CRAWFORD, MURPHY & TILLY, INC. 2015

SHEET TITLE

BLOWER-ELECTRICAL BUILDING FLOOR SLAB PLAN

S-172

Path: J:\Mattoon\12078-03\Draw\Sheets\1-CSO Satellite Treatment\120780300-S-172.dwg
Date: Wednesday, June 17, 2015 11:50:24 AM

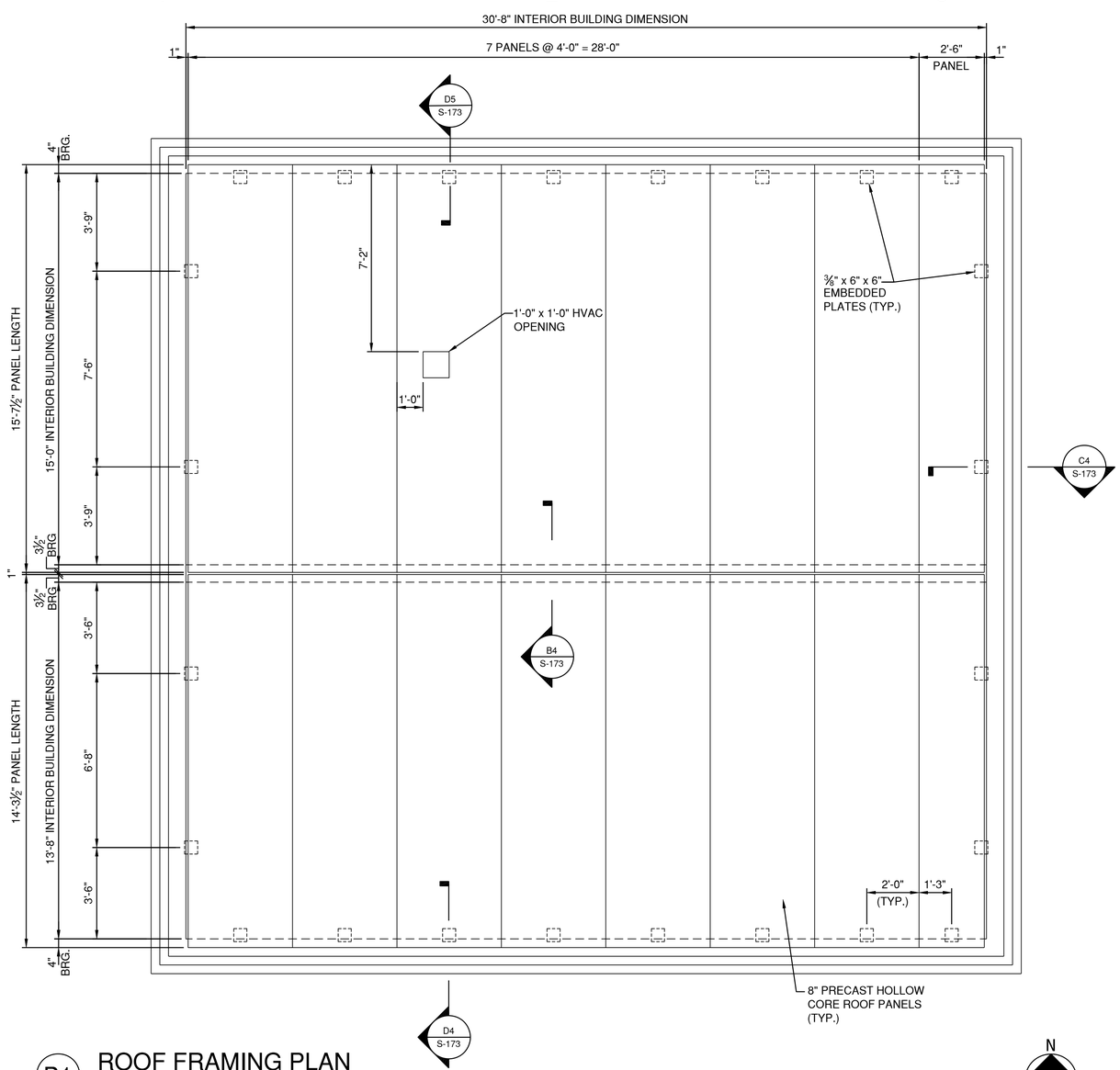

B1 ROOF FRAMING PLAN
3/8" = 1'-0"

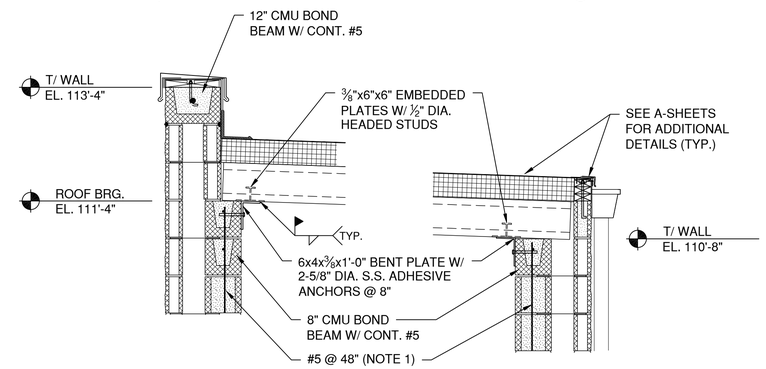

D4 SECTION
3/4" = 1'-0"

D5 SECTION
3/4" = 1'-0"

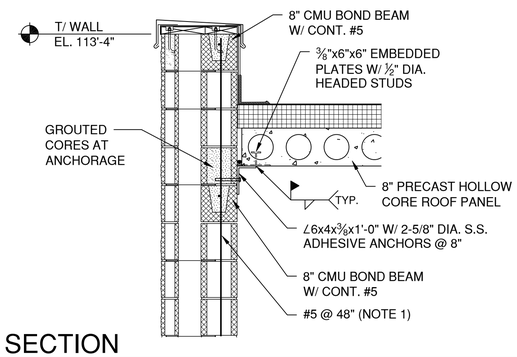

C4 SECTION
3/4" = 1'-0"

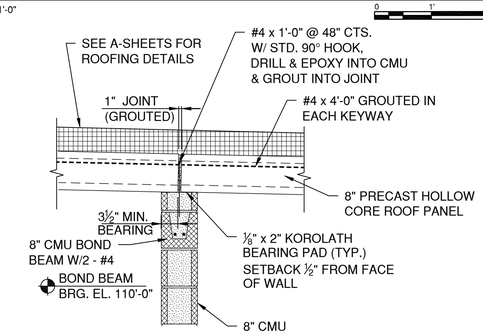

B4 SECTION
3/4" = 1'-0"

NOTES

1. IN ADDITION TO #5 @ 48" CTS., REINFORCE AND GROUT CORE FULL HEIGHT EACH SIDE OF OPENINGS, EACH SIDE OF JOINT, AND AT CORNERS.

CMT

License No. 184-000613

CONSULTANTS

MAY 2015

CSO SATELLITE TREATMENT FACILITY CONTRACT NO. 1

OWNER

MATTOON
MATTOON, ILLINOIS: *Working Together to Build the Future*

CITY OF MATTOON

MATTOON, ILLINOIS

MARK	DATE	DESCRIPTION

PROJECT NO:	12078-03-00
CAD DWG FILE:	120780300-S-173.DWG
DESIGNED BY:	JJF
DRAWN BY:	JJF/KMM
CHECKED BY:	JJF
APPROVED BY:	TCB

COPYRIGHT: CRAWFORD, MURPHY & TILLY, INC. 2015

SHEET TITLE

BLOWER-ELECTRICAL BUILDING ROOF PLAN & DETAILS

S-173

SHEET 41 OF 128

Path: J:\Mattoon\12078-03\Draw\Sheets\1-CSO Satellite Treatment\120780300-S-173.dwg
Date: Wednesday, June 17, 2015 11:50:34 AM

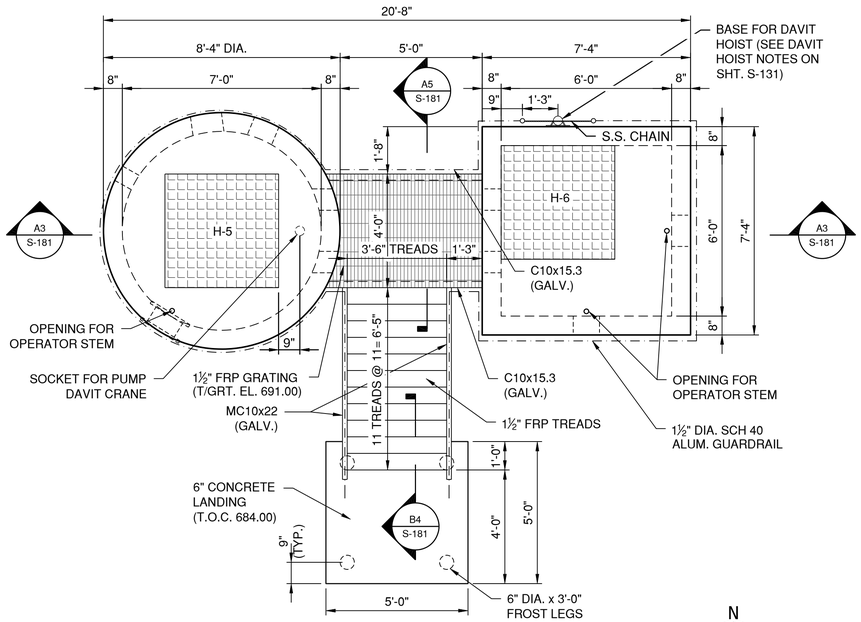

C1 FOUL SEWER/DRAIN PUMP STATION - PLAN
3/8"=1'-0"

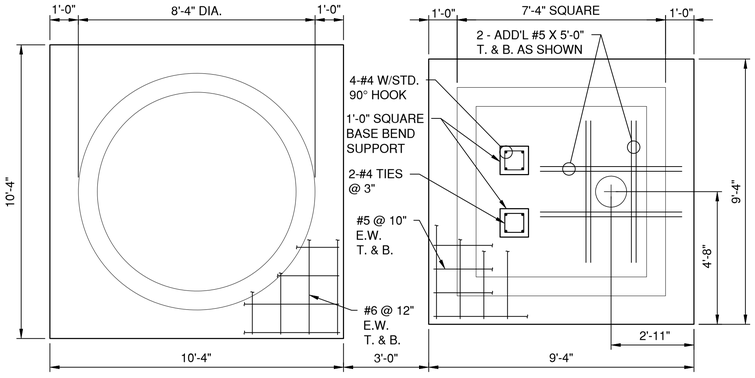

B1 FOUL SEWER/DRAIN PUMP STATION - BASE SLAB PLAN
3/8"=1'-0"

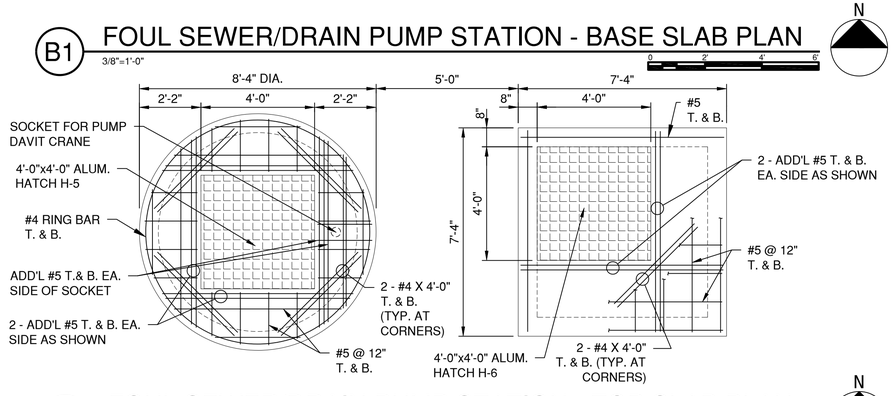

A1 FOUL SEWER/DRAIN PUMP STATION - TOP SLAB PLAN
3/8"=1'-0"

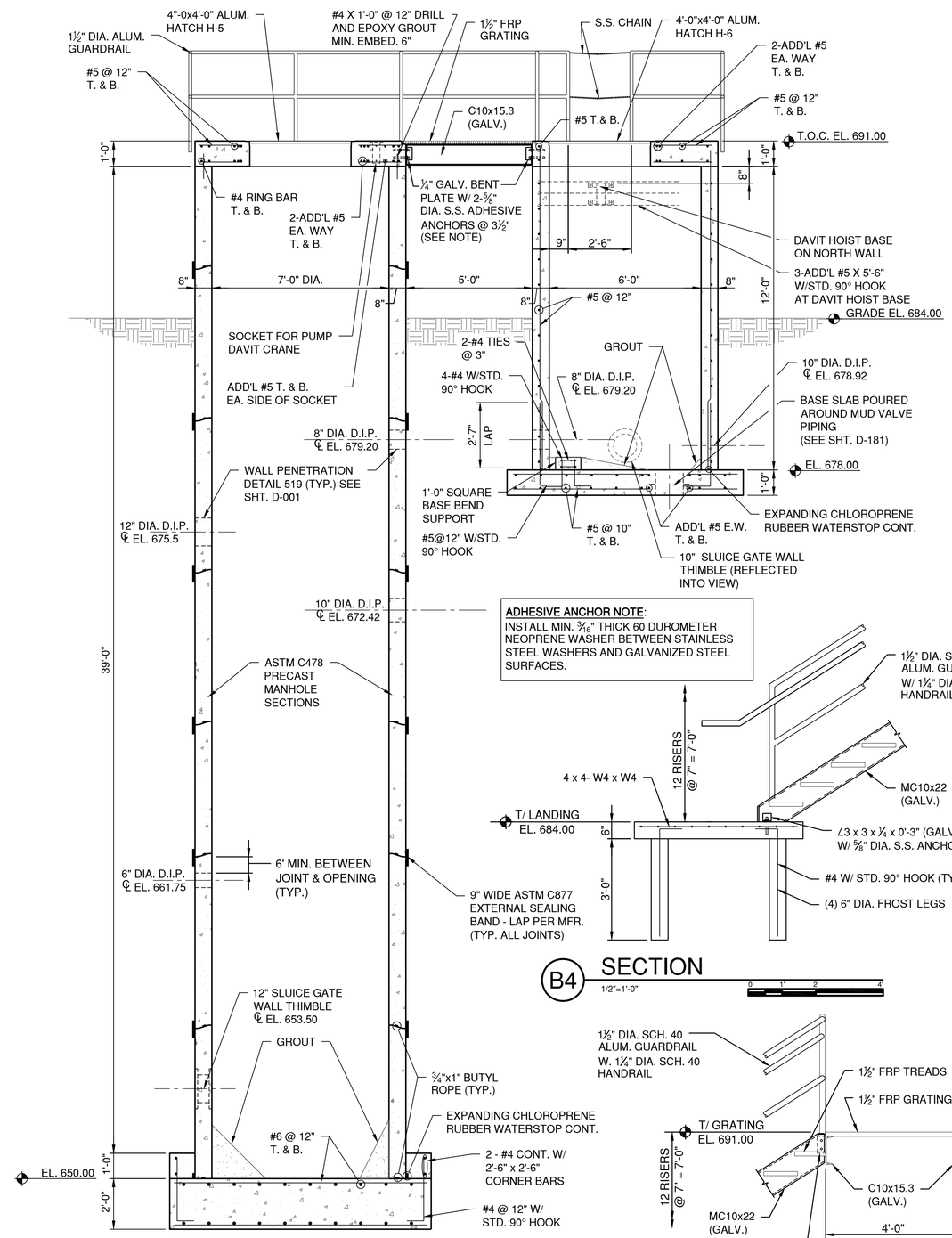

ADHESIVE ANCHOR NOTE:
INSTALL MIN. 3/16" THICK 60 DUROMETER NEOPRENE WASHER BETWEEN STAINLESS STEEL WASHERS AND GALVANIZED STEEL SURFACES.

A3 FOUL SEWER/DRAIN PUMP STATION - SECTION
3/8"=1'-0"

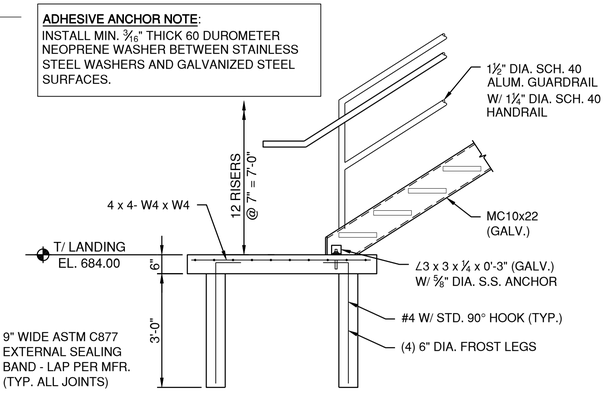

B4 SECTION
1/2"=1'-0"

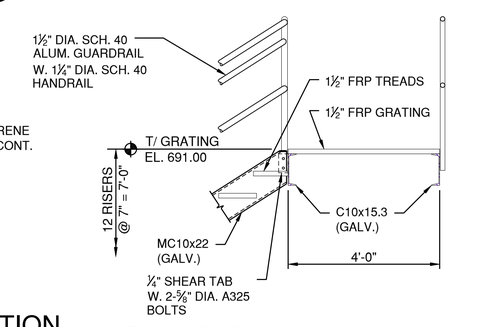

A5 SECTION
1/2"=1'-0"

CMT
License No. 184-000613
CONSULTANTS

MAY 2015

CSO SATELLITE TREATMENT FACILITY CONTRACT NO. 1

OWNER

MATTOON
MATTOON, ILLINOIS: *Working Together to Build the Future*

CITY OF MATTOON

MATTOON, ILLINOIS

MARK	DATE	DESCRIPTION

PROJECT NO:	12078-03-00
CAD DWG FILE:	120780300-S-160.DWG
DESIGNED BY:	JJF
DRAWN BY:	JJF/KMM
CHECKED BY:	JJF
APPROVED BY:	JJF

COPYRIGHT: CRAWFORD, MURPHY & TILLY, INC. 2015

SHEET TITLE
FOUL SEWER-DRAIN PUMP STATION PLAN AND SECTION

S-181

Path: J:\Mattoon\12078-03\Draw\Sheets\1-CSO Satellite Treatment\120780300-S-160.dwg
Date: Wednesday, June 17, 2015 11:50:46 AM

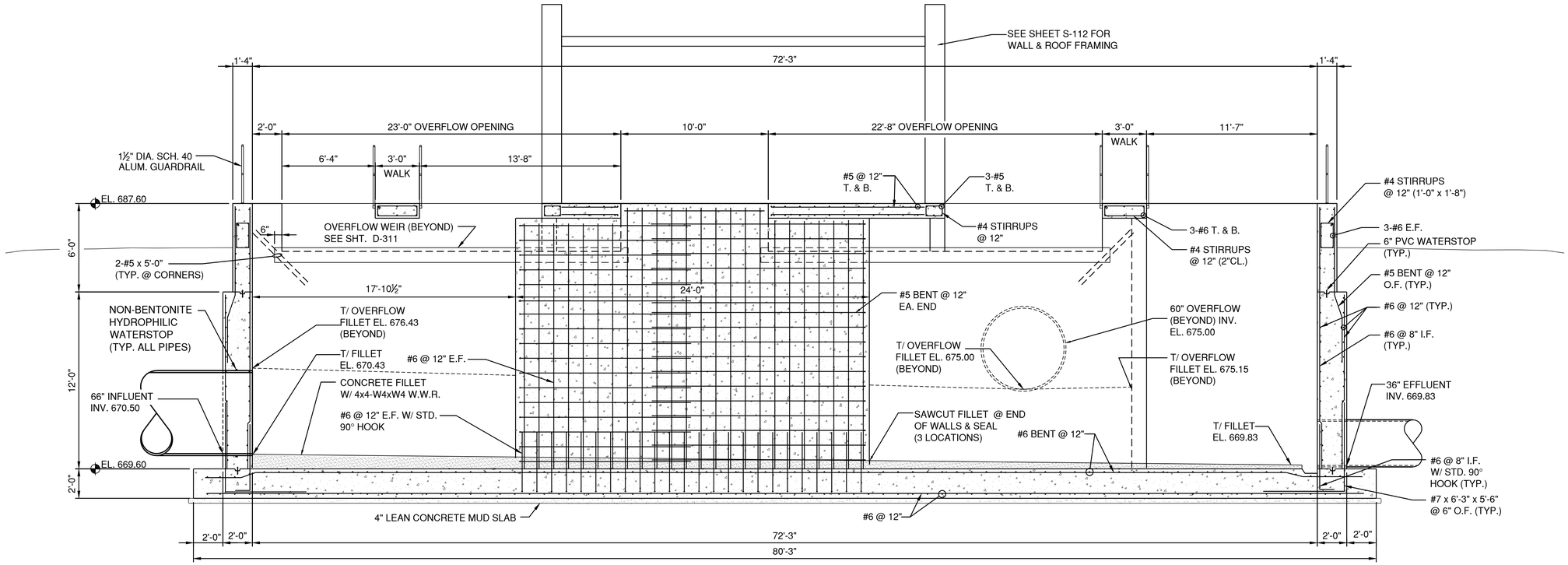

C1 SECTION

1/4" = 1'-0"

0 2' 4' 8'

NOTES

1. STRUCTURE MAY BE BACKFILLED UP TO EL. 681.0± PRIOR TO COMPLETION OF TOP SLAB AND WALKS AS LONG AS EXTERIOR WALLS AND BASE SLAB HAVE ATTAINED 4,000 PSI COMPRESIVE STRENGTH. BACKFILL ABOVE EL. 681.0 SHALL NOT BEGIN UNTIL TOP SLAB, WALKS AND EXTERIOR WALLS HAVE ATTAINED 4,000 PSI COMPRESSIVE STRENGTH.

CMT

License No. 184-000613

CONSULTANTS

MAY 2015

CSO SATELLITE
TREATMENT FACILITY
CONTRACT NO. 1

OWNER

MATTOON

MATTOON, ILLINOIS: *Working Together to Build the Future*

CITY OF MATTOON

MATTOON, ILLINOIS

MARK	DATE	DESCRIPTION

PROJECT NO:	12078-03-00
CAD DWG FILE:	120780300-S-311.DWG
DESIGNED BY:	JJF
DRAWN BY:	JJF/KMM
CHECKED BY:	JJF
APPROVED BY:	JJF

COPYRIGHT: CRAWFORD, MURPHY & TILLY, INC. 2015

SHEET TITLE

SCREEN BUILDING
SECTIONS

S-311

SHEET 43 OF 128

Path: J:\Mattoon\12078-03\Draw\Sheets\1-CSO Satellite Treatment\120780300-S-311.dwg
Date: Wednesday, June 17, 2015 11:50:59 AM

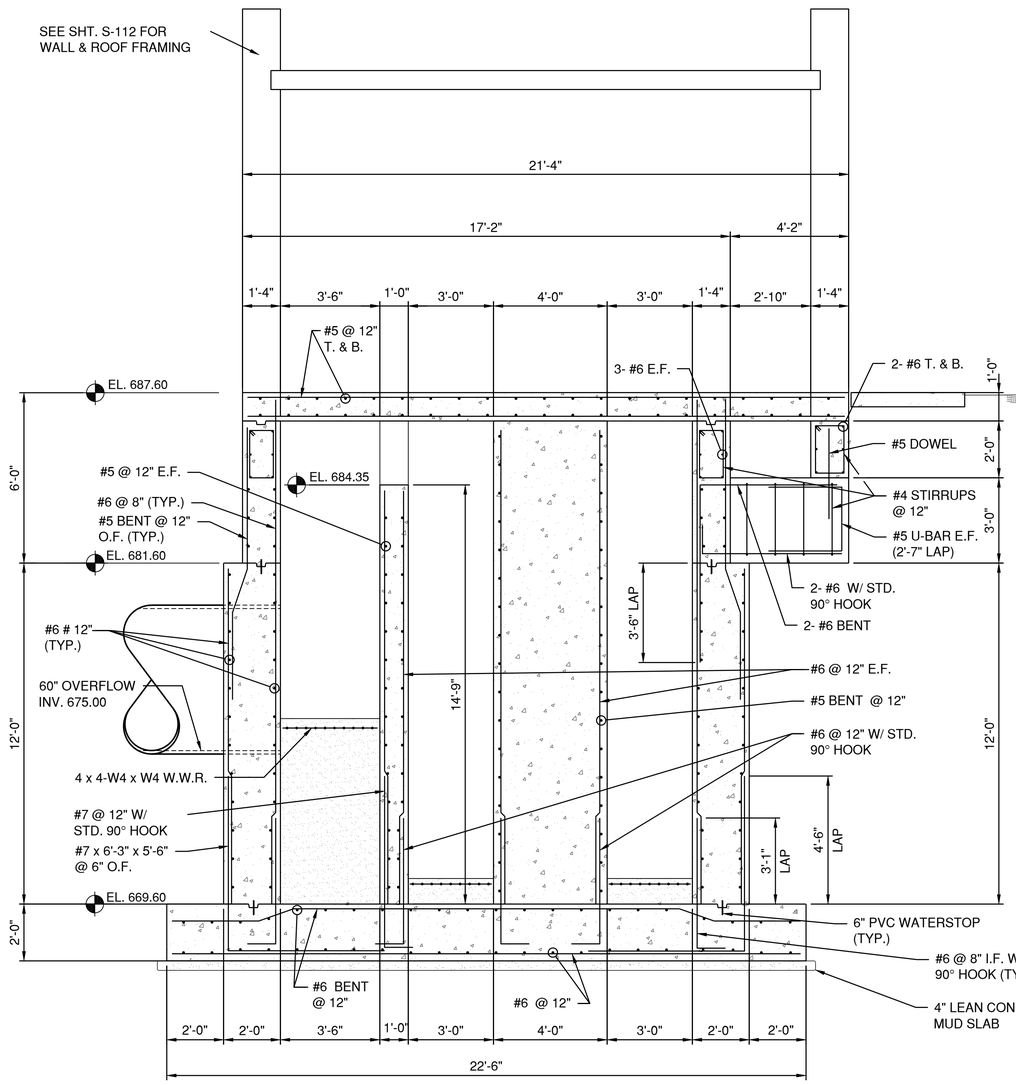

A1 SECTION

3/8" = 1'-0"

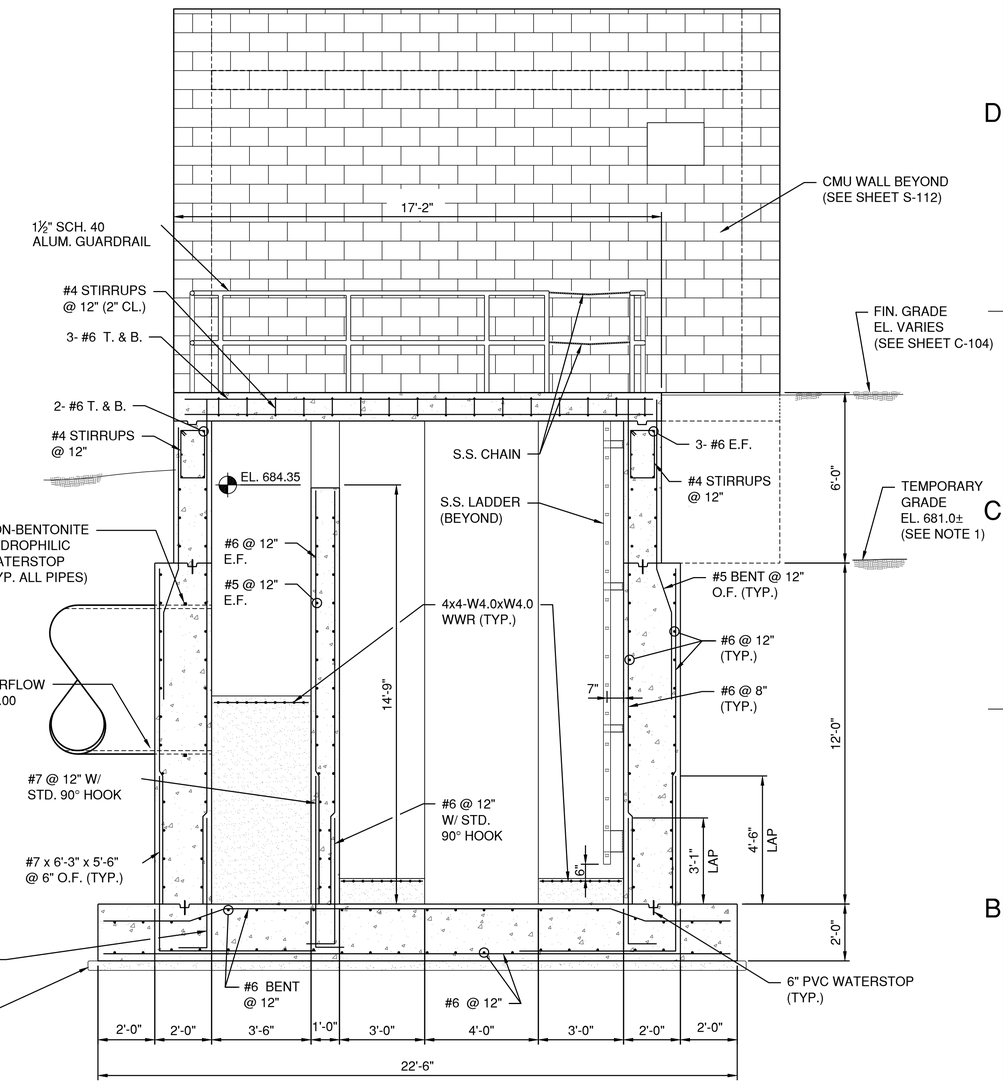

A3 SECTION

3/8" = 1'-0"

NOTES

1. STRUCTURE MAY BE BACKFILLED UP TO EL. 681.0± PRIOR TO COMPLETION OF TOP SLAB AND WALKS AS LONG AS EXTERIOR WALLS AND BASE SLAB HAVE ATTAINED 4,000 PSI COMPRESIVE STRENGTH. BACKFILL ABOVE EL. 681.0 SHALL NOT BEGIN UNTIL TOP SLAB, WALKS AND EXTERIOR WALLS HAVE ATTAINED 4,000 PSI COMPRESSIVE STRENGTH.

CMT

License No. 184-000613

CONSULTANTS

MAY 2015

CSO SATELLITE
TREATMENT FACILITY
CONTRACT NO. 1

OWNER

MATTOON
MATTOON, ILLINOIS: *Working Together to Build the Future*

CITY OF MATTOON

MATTOON, ILLINOIS

MARK	DATE	DESCRIPTION

PROJECT NO:	12078-03-00
CAD DWG FILE:	120780300-S-312.DWG
DESIGNED BY:	JJF
DRAWN BY:	JJF/KMM
CHECKED BY:	JJF
APPROVED BY:	TKB

COPYRIGHT: CRAWFORD, MURPHY & TILLY, INC. 2015

SHEET TITLE

SCREEN BUILDING
SECTIONS 2

S-312

SHEET 44 OF 128

Path: J:\Mattoon\12078-03\Draw\Sheets\1-CSO Satellite Treatment\120780300-S-312.dwg
Date: Wednesday, June 17, 2015 11:51:11 AM

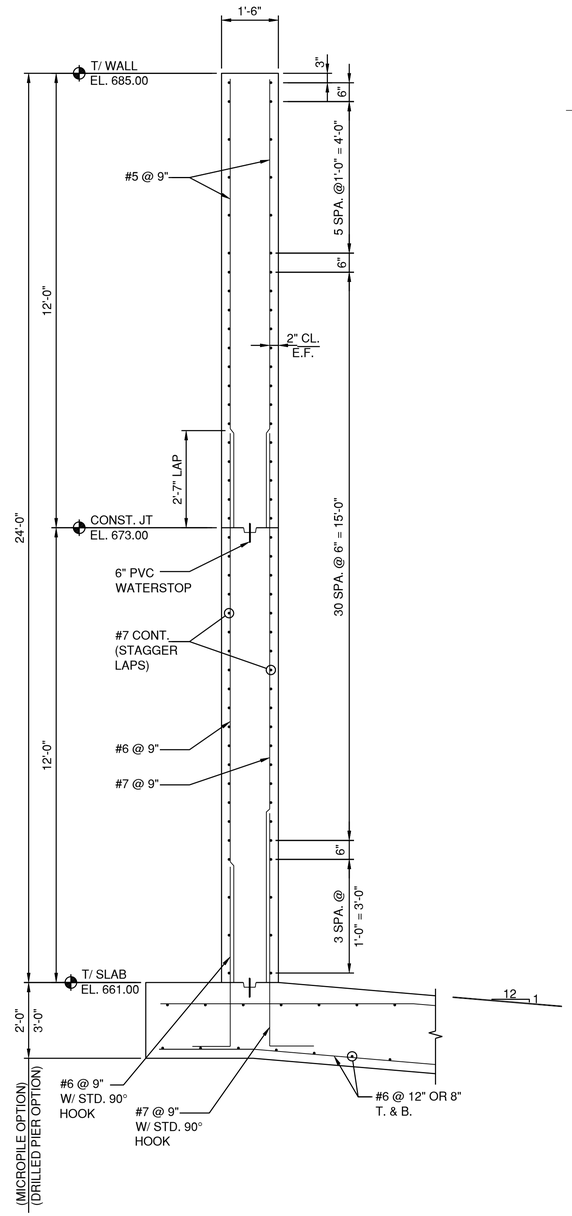

A1 SECTION
1/2" = 1'-0"

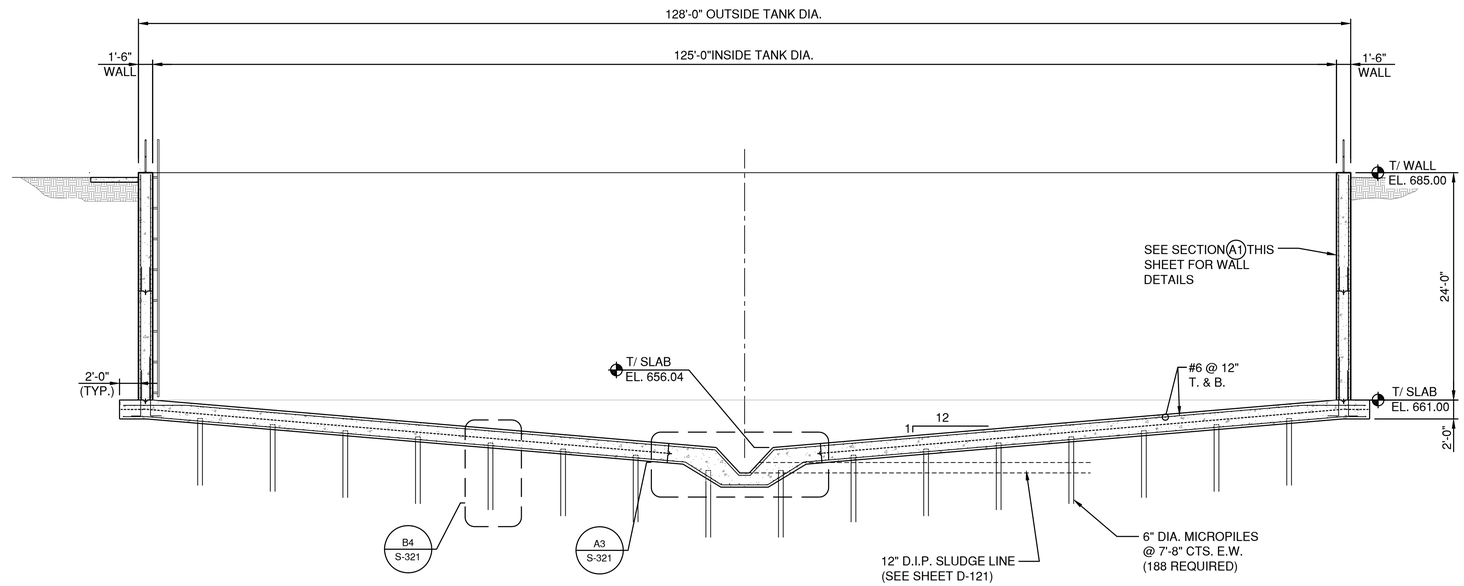

C3 SECTION
1/8" = 1'-0"

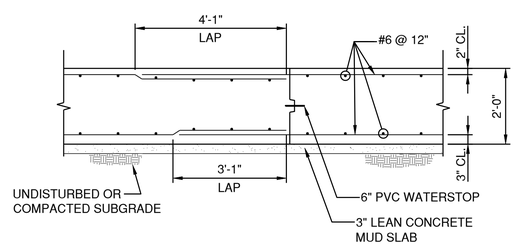

B3 SECTION -CNSTR. JOINT
1/2" = 1'-0"

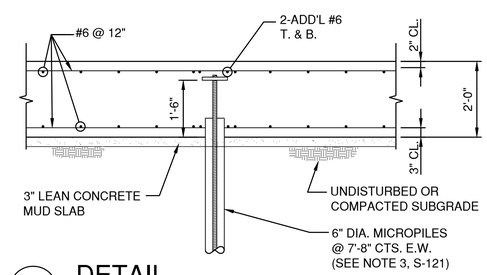

B4 DETAIL
1/2" = 1'-0"

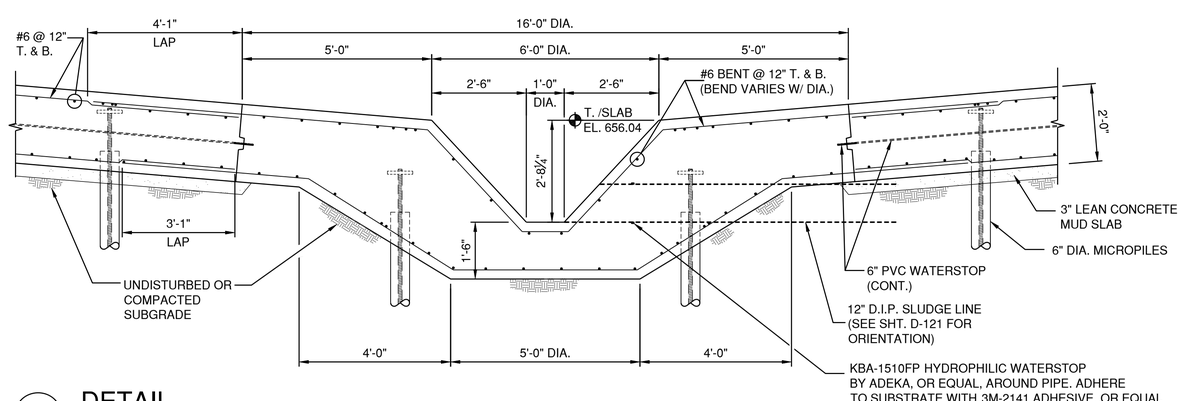

A3 DETAIL
1/2" = 1'-0"

CMT

License No. 184-000613

CONSULTANTS

MAY 2015

CSO SATELLITE
TREATMENT FACILITY
CONTRACT NO. 1

OWNER

MATTOON
MATTOON, ILLINOIS: *Working Together to Build the Future*

CITY OF MATTOON

MATTOON, ILLINOIS

MARK	DATE	DESCRIPTION

PROJECT NO:	12078-03-00
CAD DWG FILE:	120780300-S-321.DWG
DESIGNED BY:	JJF
DRAWN BY:	JJF/KMM
CHECKED BY:	JJF
APPROVED BY:	JJF

COPYRIGHT: CRAWFORD, MURPHY & TILLY, INC. 2015

SHEET TITLE

FIRST FLUSH TANK
MICROPILE OPTION
DETAILS

S-321

SHEET 45 OF 128

Path: J:\Mattoon\12078-03\Draw\Sheets\1-CSO Satellite Treatment\120780300-S-321.dwg
Date: Wednesday, June 17, 2015 11:51:21 AM

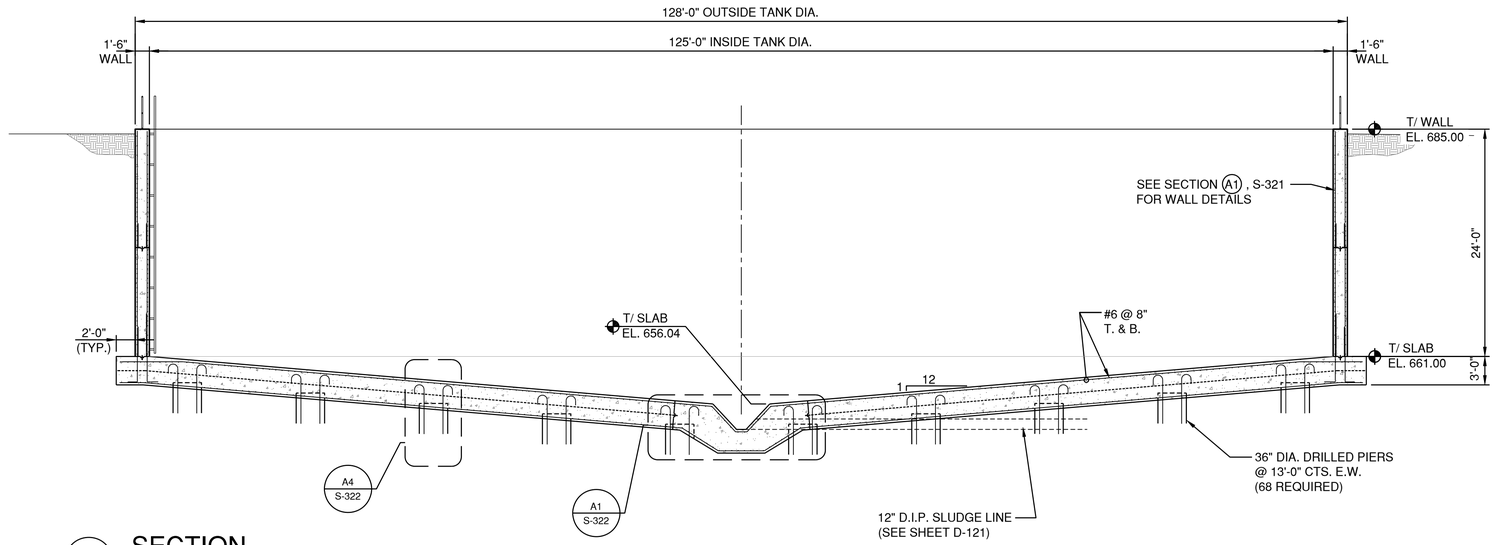

C1 SECTION
1/4" = 1'-0"

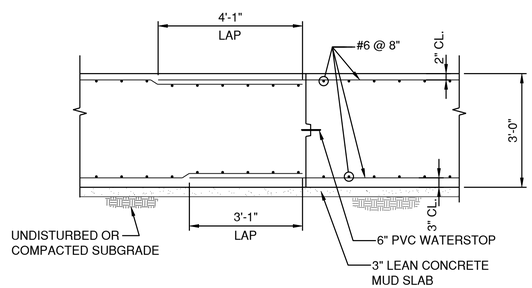

B1 SECTION
1/2" = 1'-0"

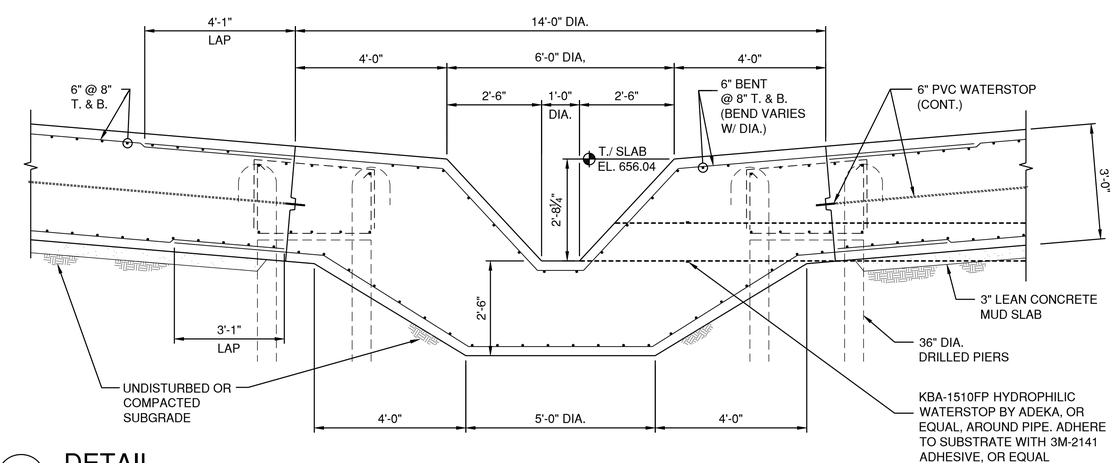

A1 DETAIL
1/2" = 1'-0"

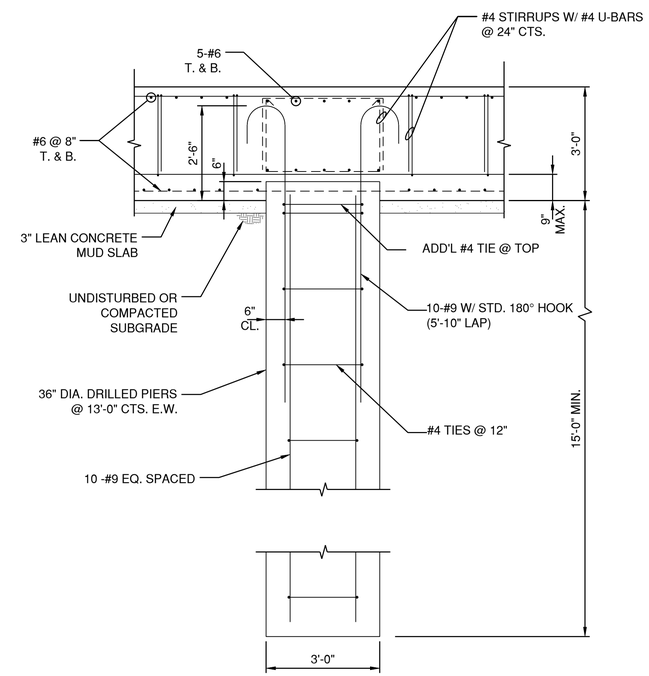

A4 SECTION
1/2" = 1'-0"

CMT

License No. 184-000613

CONSULTANTS

MAY 2015

CSO SATELLITE TREATMENT FACILITY CONTRACT NO. 1

OWNER

MATTOON

MATTOON, ILLINOIS: *Working Together to Build the Future*

CITY OF MATTOON

MATTOON, ILLINOIS

MARK	DATE	DESCRIPTION

PROJECT NO:	12078-03-00
CAD DWG FILE:	120780300-S-323.DWG
DESIGNED BY:	JJF
DRAWN BY:	JJF/KMM
CHECKED BY:	JJF
APPROVED BY:	TLB

COPYRIGHT: CRAWFORD, MURPHY & TILLY, INC. 2015

SHEET TITLE

FIRST FLUSH TANK DRILLED PIER OPTION DETAILS

S-322

SHEET 46 OF 128

Path: J:\Mattoon\12078-03\Draw\Sheets\1-CSO Satellite Treatment\120780300-S-323.dwg
Date: Wednesday, June 17, 2015 11:51:32 AM

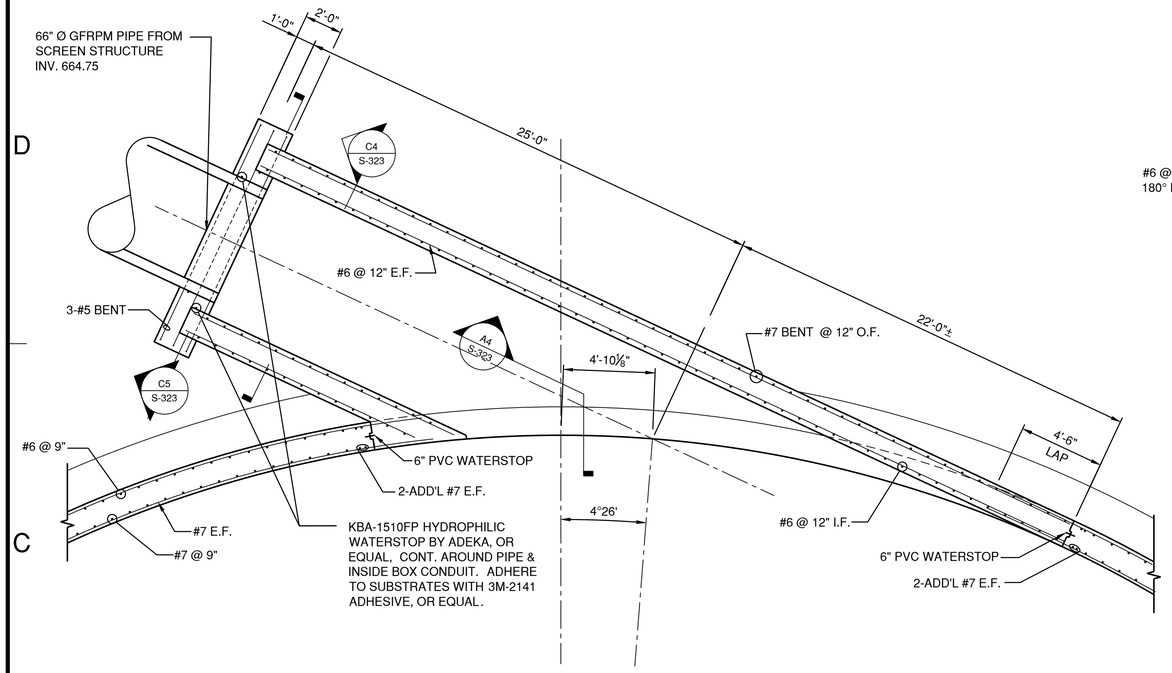

C1 PLAN
1/4" = 1'-0"

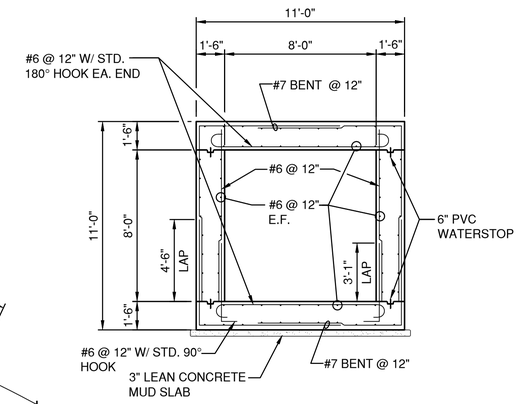

C4 SECTION
1/4" = 1'-0"

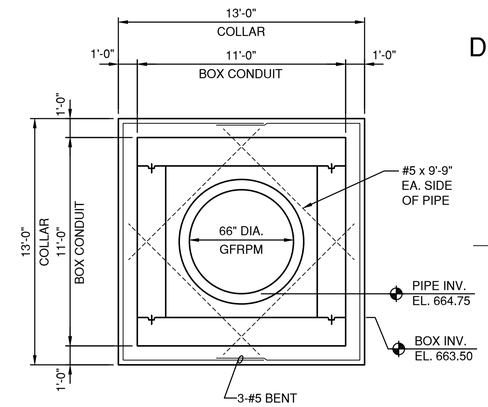

C5 SECTION
1/4" = 1'-0"

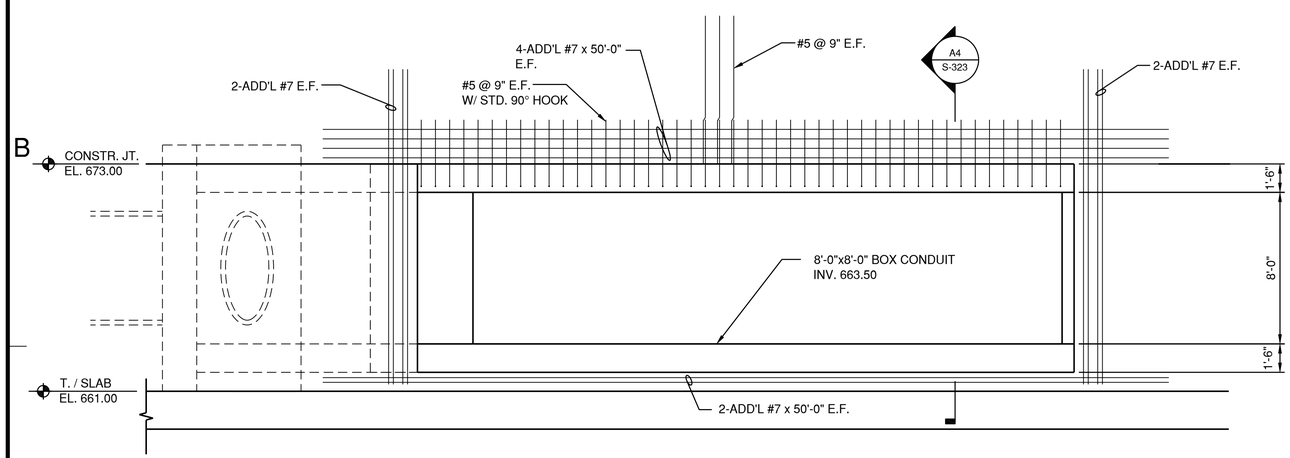

A1 ELEVATION
1/4" = 1'-0"

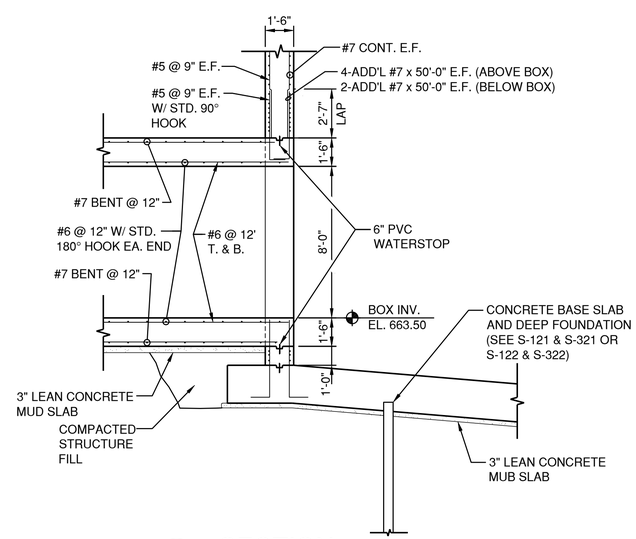

A4 SECTION
1/4" = 1'-0"

CMT

License No. 184-000613

CONSULTANTS

MAY 2015

CSO SATELLITE TREATMENT FACILITY CONTRACT NO. 1

OWNER

MATTOON
MATTOON, ILLINOIS: *Working Together to Build the Future*

CITY OF MATTOON

MATTOON, ILLINOIS

MARK	DATE	DESCRIPTION

PROJECT NO:	12078-03-00
CAD DWG FILE:	120780300-S-322.DWG
DESIGNED BY:	JJF
DRAWN BY:	JJF/KMM
CHECKED BY:	JJF
APPROVED BY:	TLB

COPYRIGHT: CRAWFORD, MURPHY & TILLY, INC. 2015

SHEET TITLE

FIRST FLUSH TANK SECTIONS AND DETAILS

S-323

SHEET 47 OF 128

Path: J:\Mattoon\12078-03\Draw\Sheets\1-CSO Satellite Treatment\120780300-S-322.dwg
Date: Wednesday, June 17, 2015 11:51:42 AM

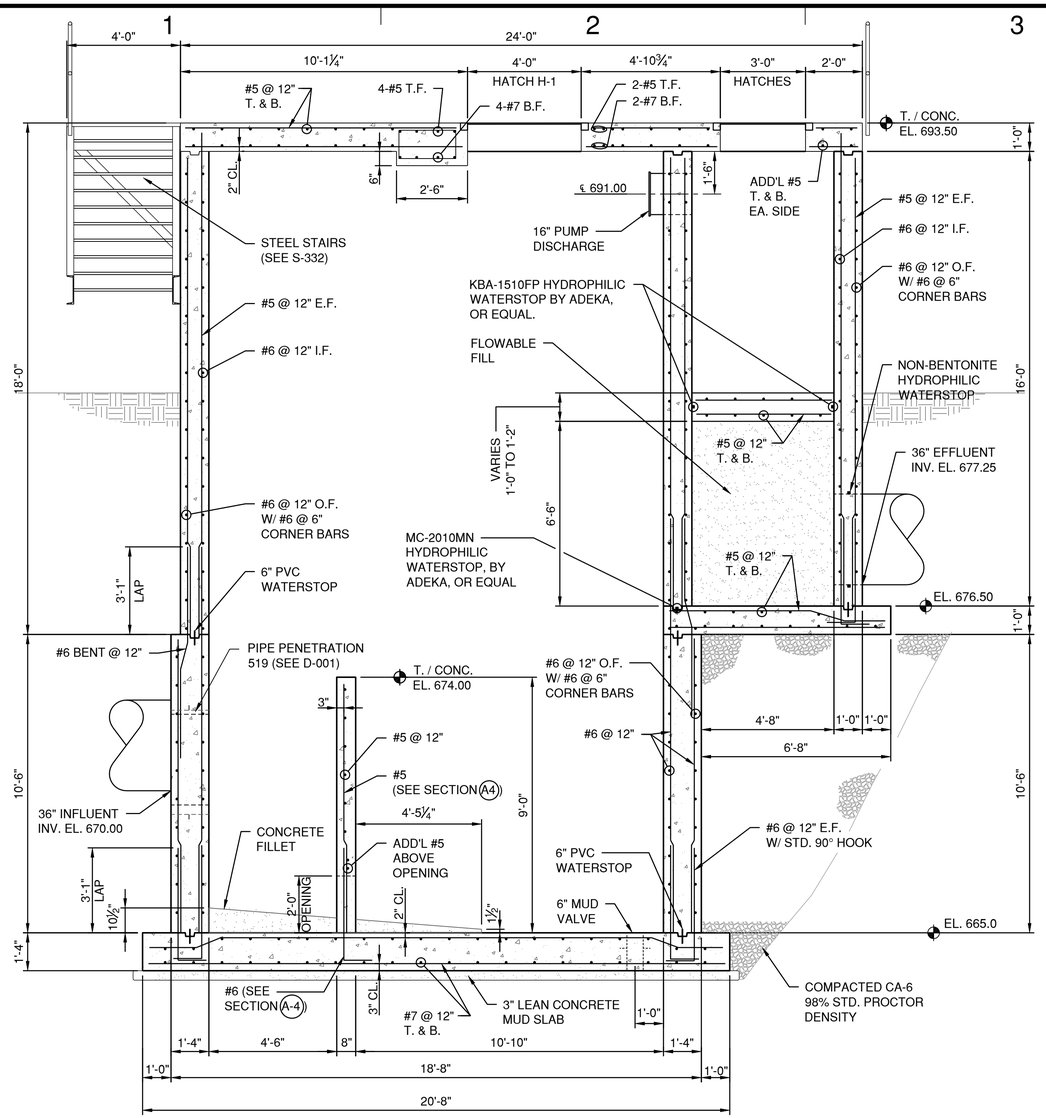

B1 SECTION
3/8" = 1'-0"

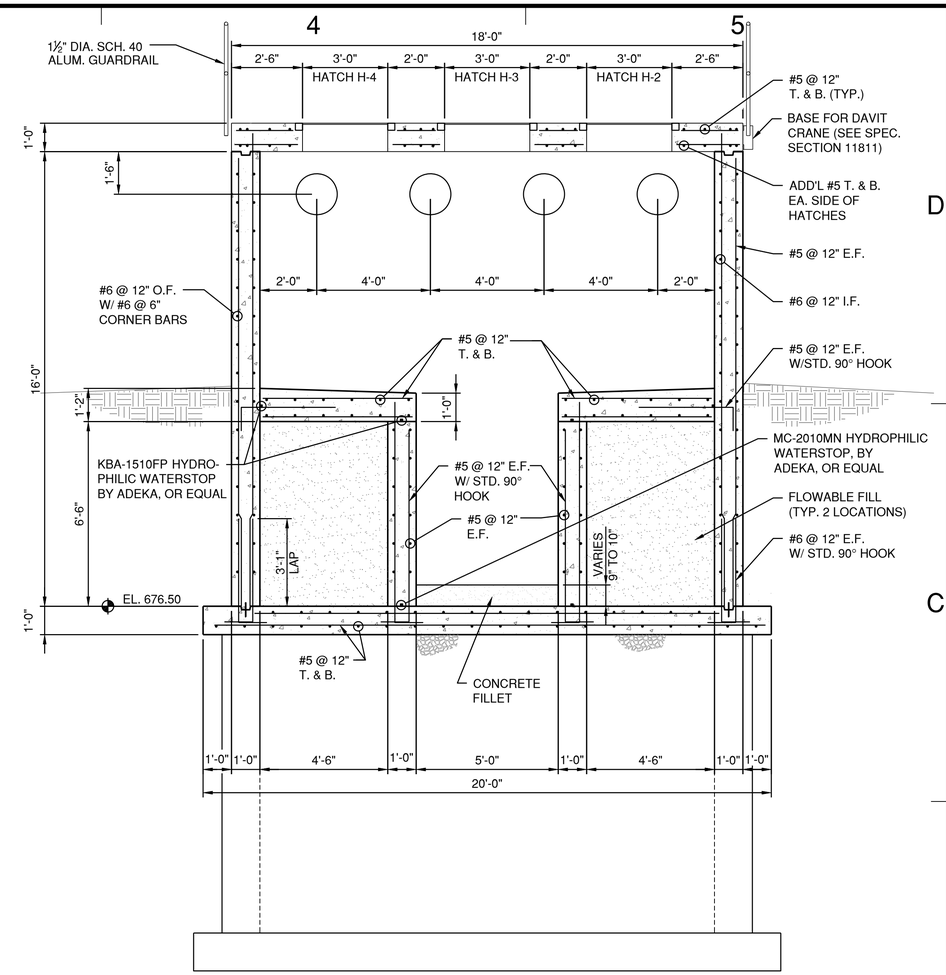

B4 SECTION
3/8" = 1'-0"

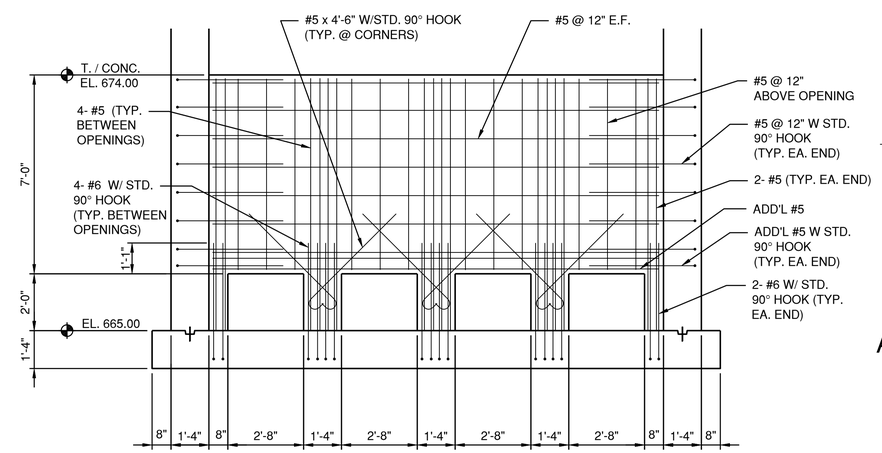

A4 SECTION
3/8" = 1'-0"

CMT

License No. 184-000613

CONSULTANTS

MAY 2015

CSO SATELLITE TREATMENT FACILITY CONTRACT NO. 1

OWNER

MATTOON

MATTOON, ILLINOIS: *Working Together to Build the Future*

CITY OF MATTOON

MATTOON, ILLINOIS

MARK	DATE	DESCRIPTION

PROJECT NO:	12078-03-00
CAD DWG FILE:	120780300-S-331.DWG
DESIGNED BY:	JJF
DRAWN BY:	JJF/KMM
CHECKED BY:	JJF
APPROVED BY:	JJF

COPYRIGHT: CRAWFORD, MURPHY & TILLY, INC. 2015

SHEET TITLE

INFLUENT PUMP STATION SECTIONS

S-331

SHEET 48 OF 128

Path: J:\Mattoon\12078-03\Draw\Sheets\1-CSO Satellite Treatment\120780300-S-331.dwg
Date: Wednesday, June 17, 2015 11:51:52 AM

NOTES

1. UNLESS NOTED OTHERWISE, FRAMING CONNECTIONS SHALL BE MADE WITH MIN. ¼" CONNECTION PLATES OR ANGLES AND 2-⅝" DIA. A-325 BOLTS.
2. ALL FRAMING STEEL SHALL BE HOT DIP GALVANIZED.

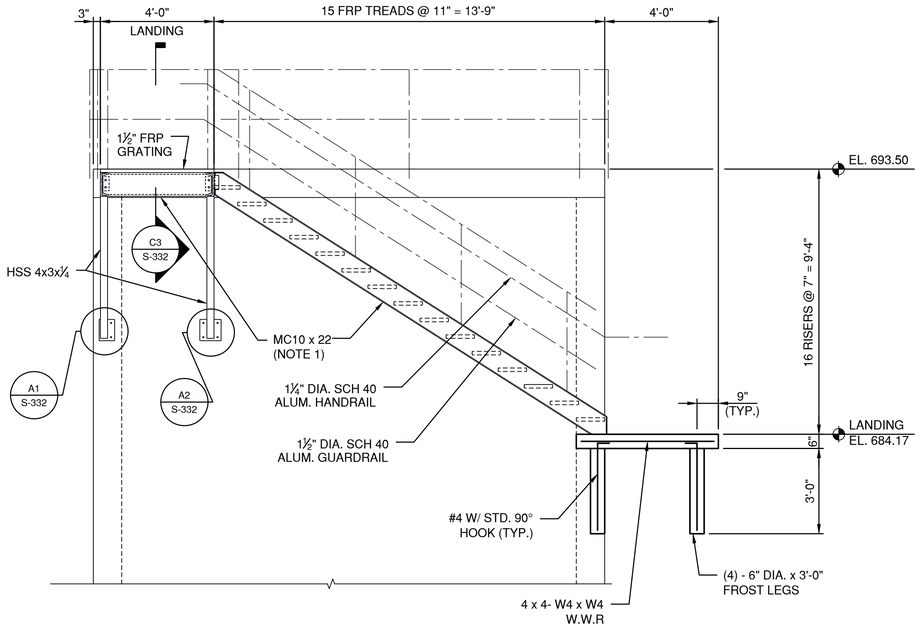

C1 ELEVATION
3/8" = 1'-0"

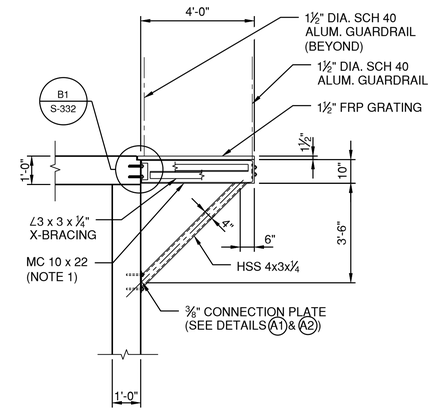

C3 SECTION
3/8" = 1'-0"

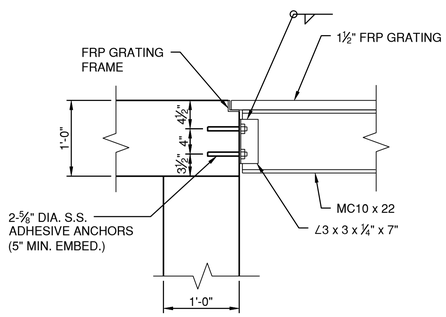

B1 DETAIL
1" = 1'-0"

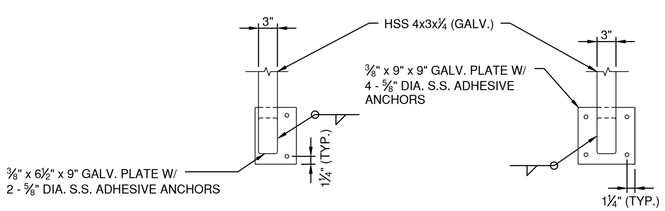

A1 DETAIL
1" = 1'-0"

A2 DETAIL
1" = 1'-0"

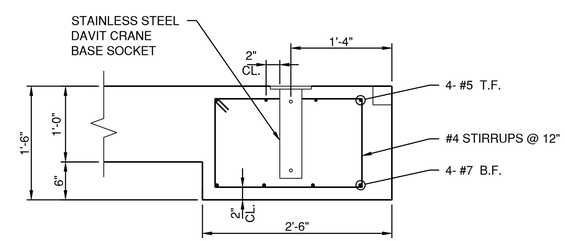

A4 DAVIT CRANE SOCKET DETAIL
1" = 1'-0"

CMT

License No. 184-000613

CONSULTANTS

MAY 2015

CSO SATELLITE
TREATMENT FACILITY
CONTRACT NO. 1

OWNER

MATTOON
MATTOON, ILLINOIS: *Working Together to Build the Future*

CITY OF MATTOON

MATTOON, ILLINOIS

MARK	DATE	DESCRIPTION

PROJECT NO:	12078-03-00
CAD DWG FILE:	120780300-S-332.DWG
DESIGNED BY:	JJF
DRAWN BY:	JJF/KMM
CHECKED BY:	JJF
APPROVED BY:	JJF

COPYRIGHT: CRAWFORD, MURPHY & TILLY, INC. 2015

SHEET TITLE

INFLUENT PUMP
STATION STAIR
SECTIONS & DETAILS

S-332

SHEET 49 OF 128

Path: J:\Mattoon\12078-03\Draw\Sheets\1-CSO Satellite Treatment\120780300-S-332.dwg
Date: Wednesday, June 17, 2015 11:52:02 AM

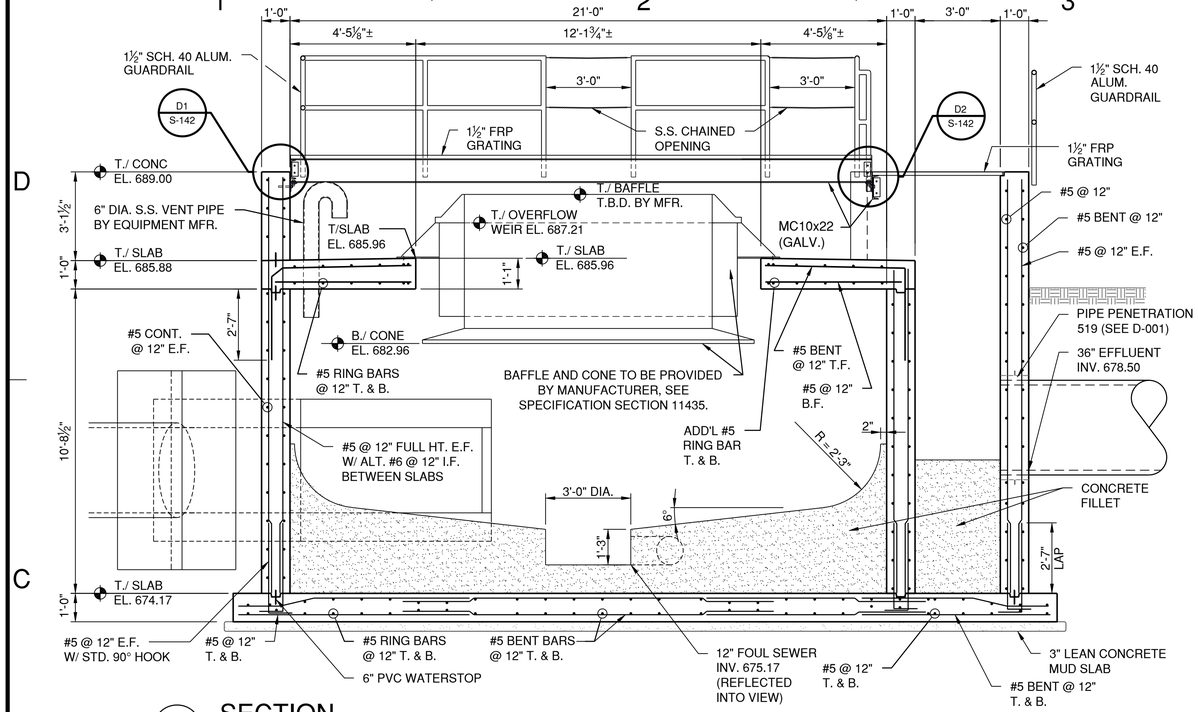

C1 SECTION
3/8" = 1'-0"

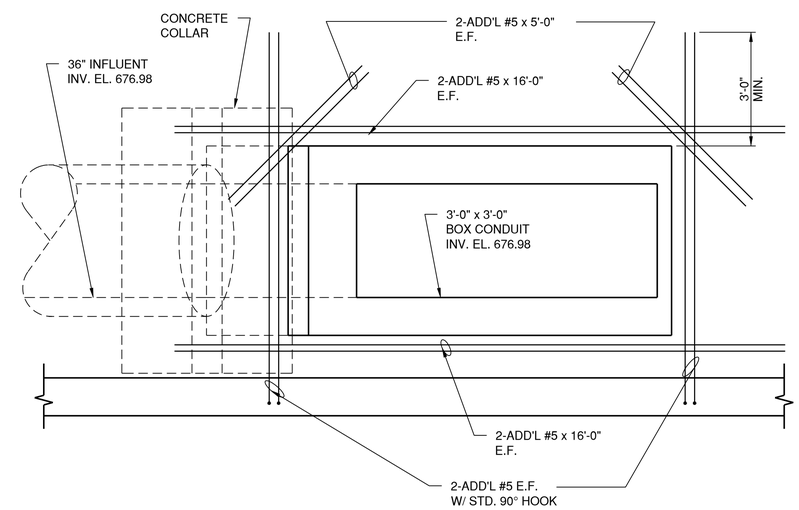

C4 ELEVATION
1/2" = 1'-0"

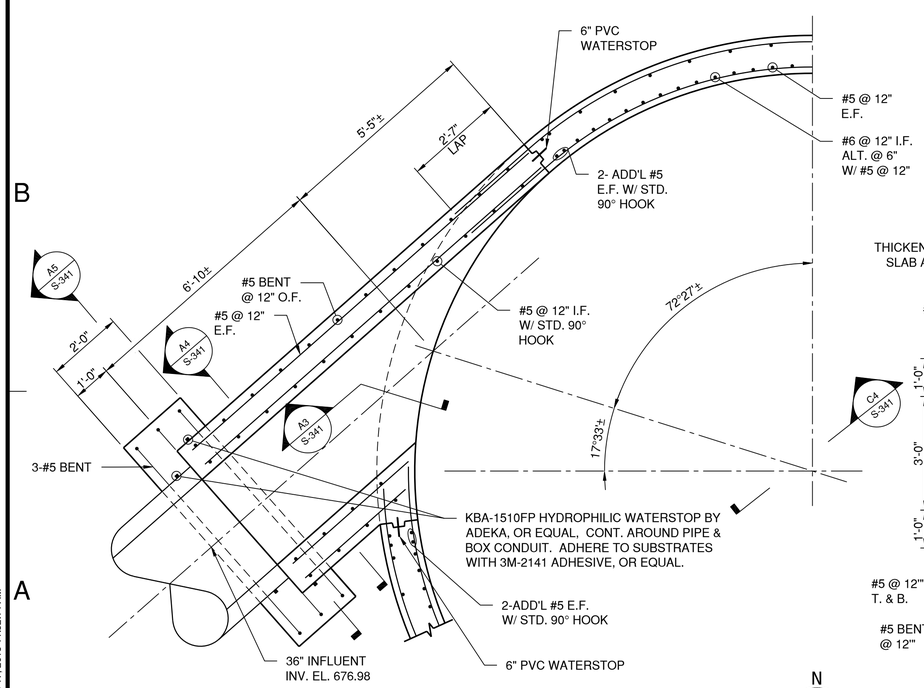

A1 DETAIL
1/2" = 1'-0"

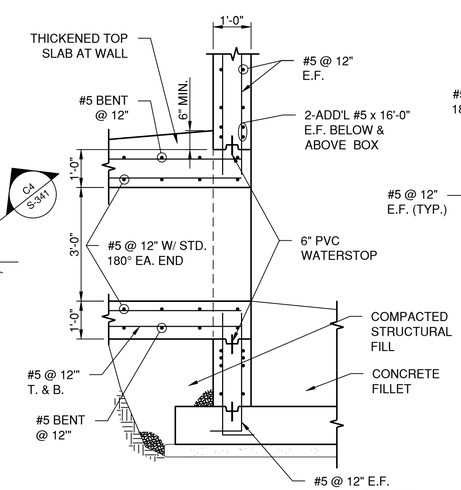

A3 SECTION
1/2" = 1'-0"

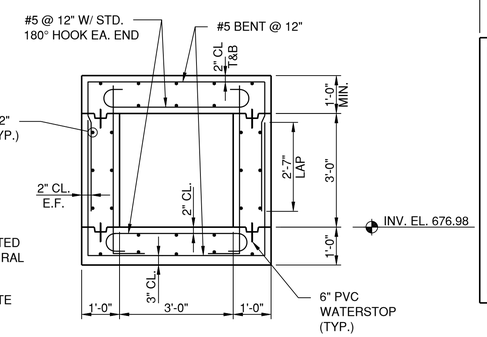

A4 SECTION
1/2" = 1'-0"

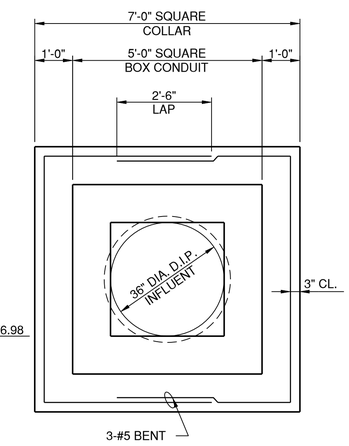

A5 SECTION
1/2" = 1'-0"

CMT

License No. 184-000613

CONSULTANTS

MAY 2015

CSO SATELLITE TREATMENT FACILITY CONTRACT NO. 1

OWNER

MATTOON

MATTOON, ILLINOIS: *Working Together to Build the Future*

CITY OF MATTOON

MATTOON, ILLINOIS

MARK	DATE	DESCRIPTION

PROJECT NO:	12078-03-00
CAD DWG FILE:	120780300-S-341.DWG
DESIGNED BY:	JJF
DRAWN BY:	JJF/KMM
CHECKED BY:	JJF
APPROVED BY:	TCB

COPYRIGHT: CRAWFORD, MURPHY & TILLY, INC. 2015

SHEET TITLE

SWIRL CONCENTRATOR SECTIONS & DETAILS

S-341

SHEET 50 OF 128

Path: J:\Mattoon\12078-03\Draw\Sheets\1-CSO Satellite Treatment\120780300-S-341.dwg
Date: Wednesday, June 17, 2015 11:52:14 AM

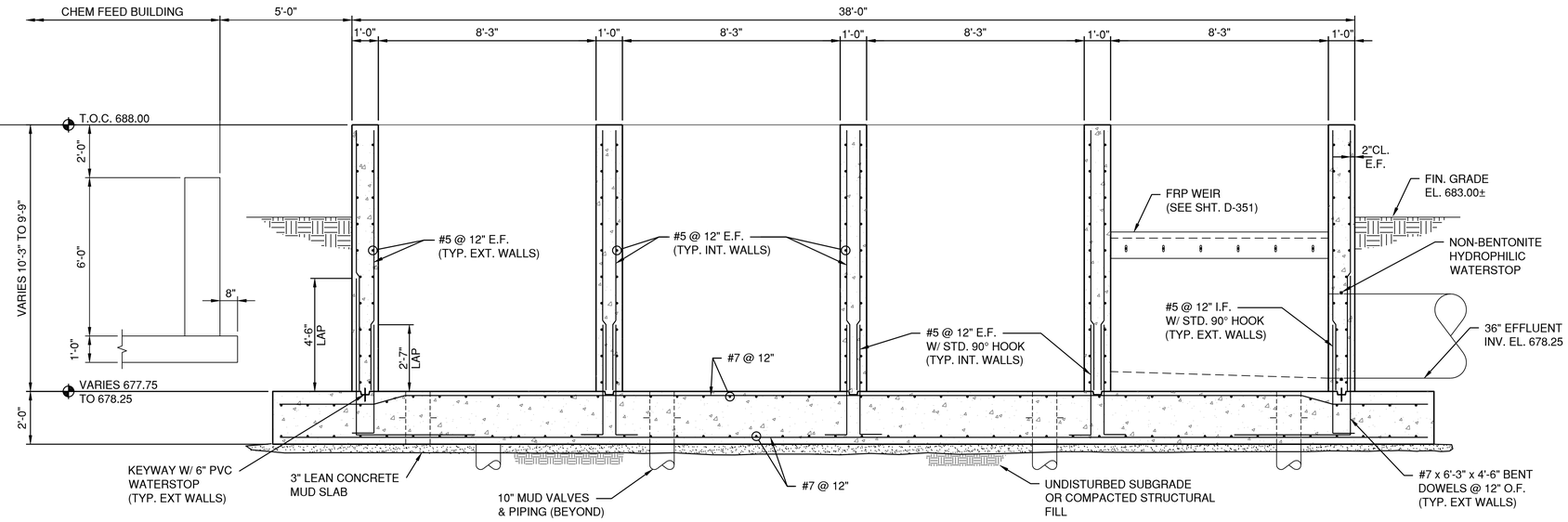

C1 SECTION
3/8" = 1'-0"

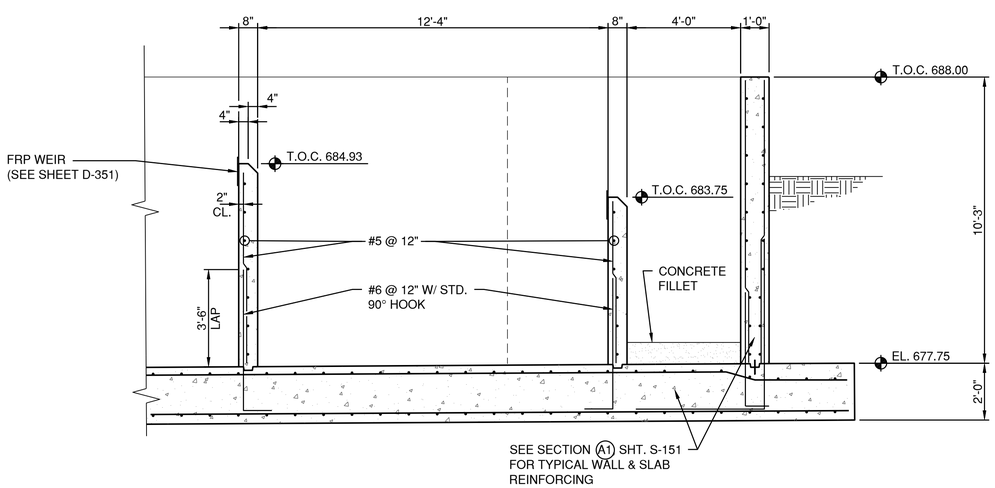

A1 SECTION
3/8" = 1'-0"

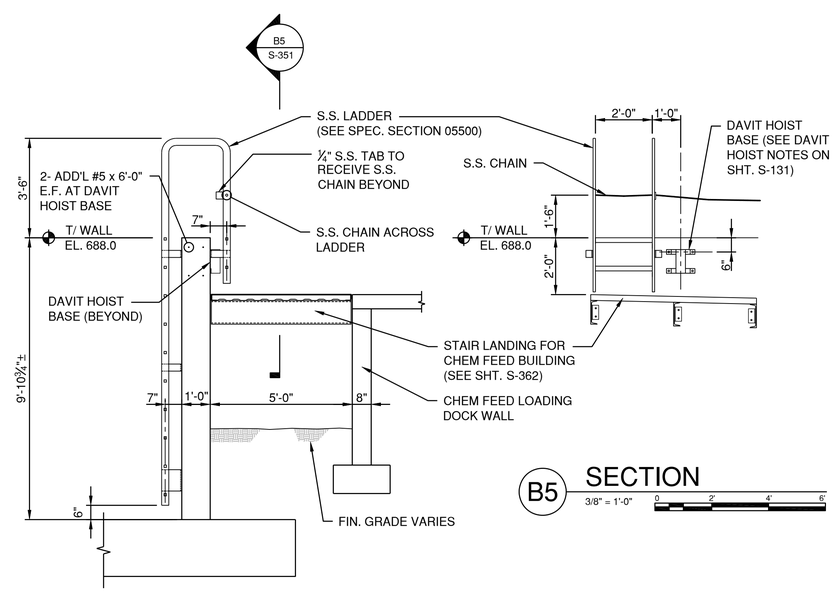

B5 SECTION
3/8" = 1'-0"

A4 SECTION
3/8" = 1'-0"

CMT

License No. 184-000613

CONSULTANTS

MAY 2015

CSO SATELLITE
TREATMENT FACILITY
CONTRACT NO. 1

OWNER

MATTOON
MATTOON, ILLINOIS: *Working Together to Build the Future*

CITY OF MATTOON

MATTOON, ILLINOIS

MARK	DATE	DESCRIPTION

PROJECT NO:	12078-03-00
CAD DWG FILE:	120780300-S-351.DWG
DESIGNED BY:	JJF
DRAWN BY:	JJF/KMM
CHECKED BY:	JJF
APPROVED BY:	TJB

COPYRIGHT: CRAWFORD, MURPHY & TILLY, INC. 2015

SHEET TITLE

CHLORINE CONTACT
TANK SECTIONS &
DETAILS

S-351

SHEET 51 OF 128

Path: J:\Mattoon\12078-03\Draw\Sheets\1-CSO Satellite Treatment\120780300-S-351.dwg
Date: Wednesday, June 17, 2015 11:52:26 AM

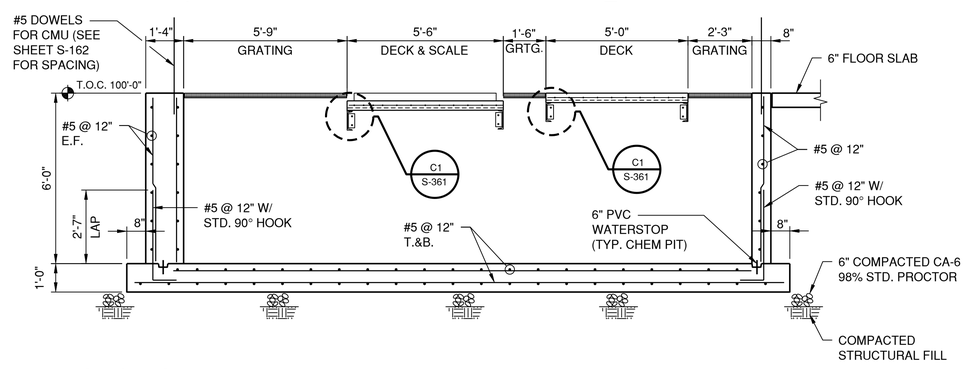

D1 SECTION
3/8"=1-0"

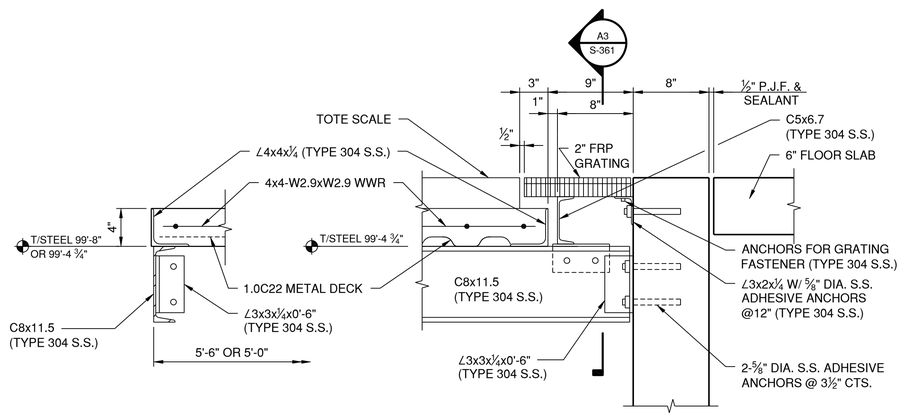

C1 DETAIL
1 1/2"=1-0"

C2 DETAIL
1 1/2"=1-0"

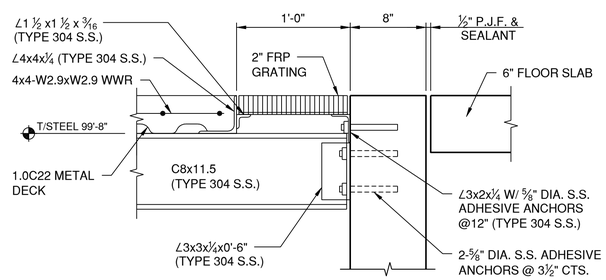

B2 DETAIL
1 1/2"=1-0"

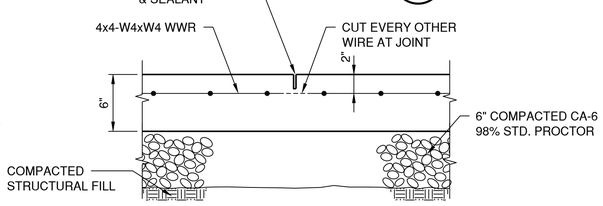

A1 CONTRACTION JOINT DETAIL
1 1/2"=1-0"

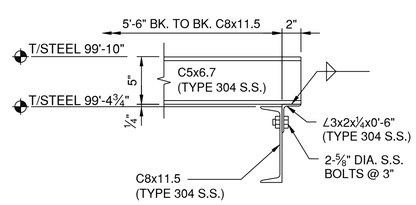

A3 SECTION
1 1/2"=1-0"

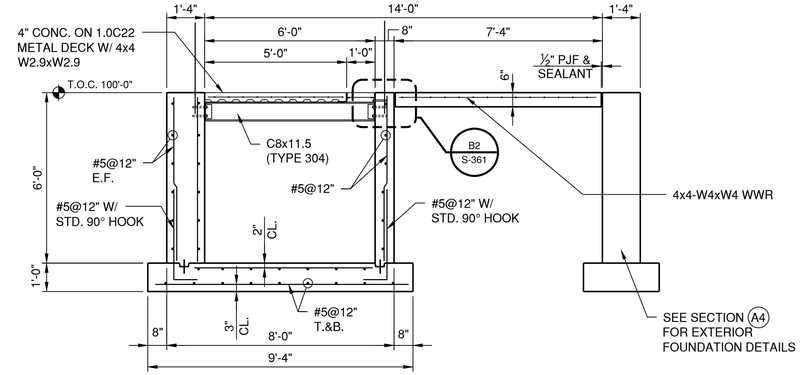

D4 SECTION
3/8"=1-0"

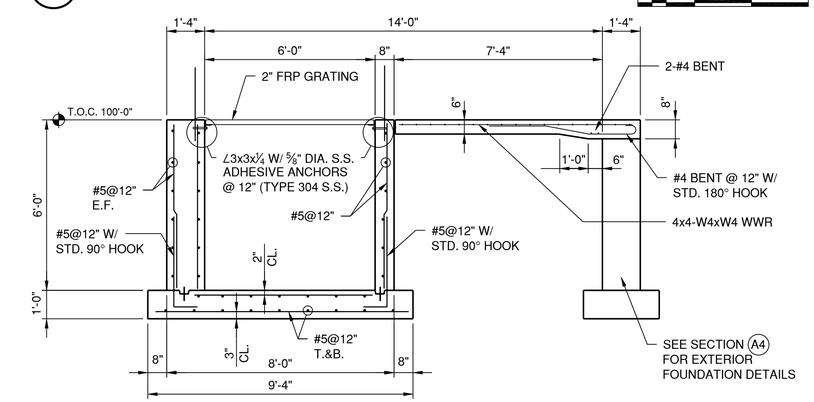

C4 SECTION
3/8"=1-0"

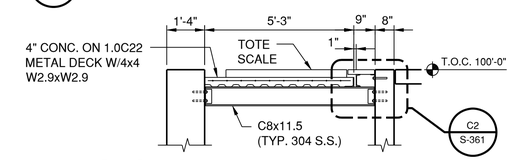

B4 SECTION
3/8"=1-0"

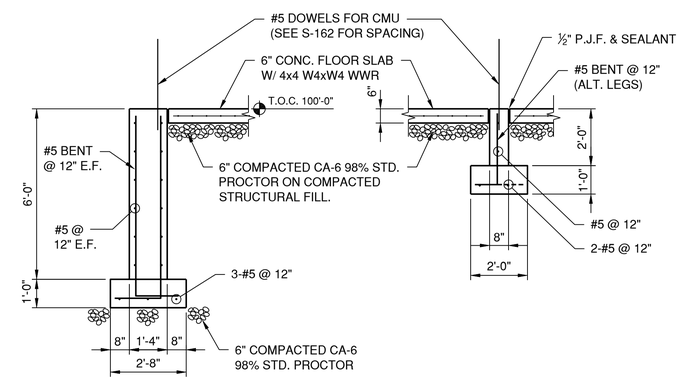

A4 SECTION
3/8"=1-0"

A5 SECTION
3/8"=1-0"

CMT

License No. 184-000613

CONSULTANTS

MAY 2015

CSO SATELLITE TREATMENT FACILITY CONTRACT NO. 1

OWNER

MATTOON

MATTOON, ILLINOIS: *Working Together to Build the Future*

CITY OF MATTOON

MATTOON, ILLINOIS

MARK	DATE	DESCRIPTION

PROJECT NO:	12078-03-00
CAD DWG FILE:	120780300-S-361.DWG
DESIGNED BY:	JJF
DRAWN BY:	JJF/KMM
CHECKED BY:	JJF
APPROVED BY:	TAB

COPYRIGHT: CRAWFORD, MURPHY & TILLY, INC. 2015

SHEET TITLE

CHEMICAL FEED BUILDING SECTIONS

S-361

SHEET 52 OF 128

Path: J:\Mattoon\12078-03\Draw\Sheets\1-CSO Satellite Treatment\120780300-S-361.dwg
Date: Wednesday, June 17, 2015 11:52:36 AM

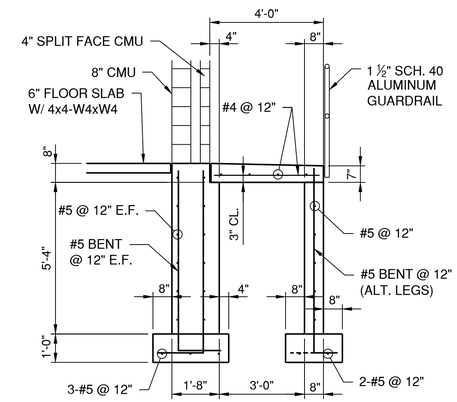

C1 SECTION
3/8"=1'-0"

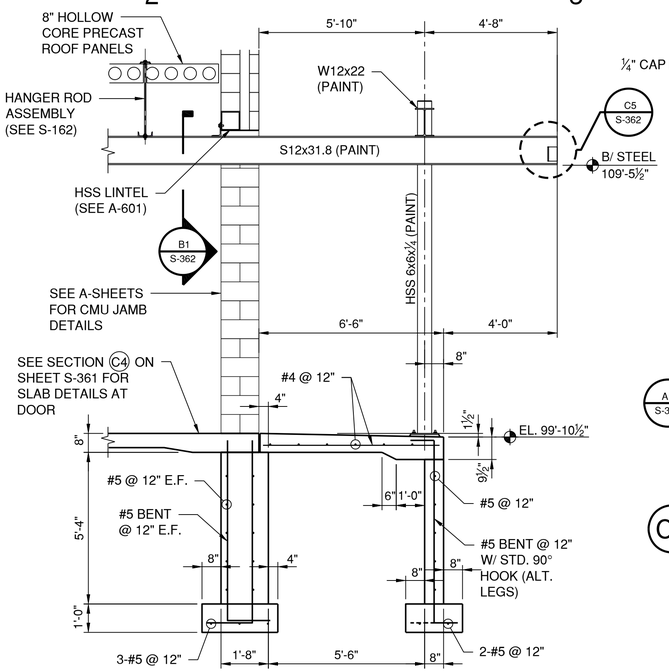

C2 SECTION
3/8"=1'-0"

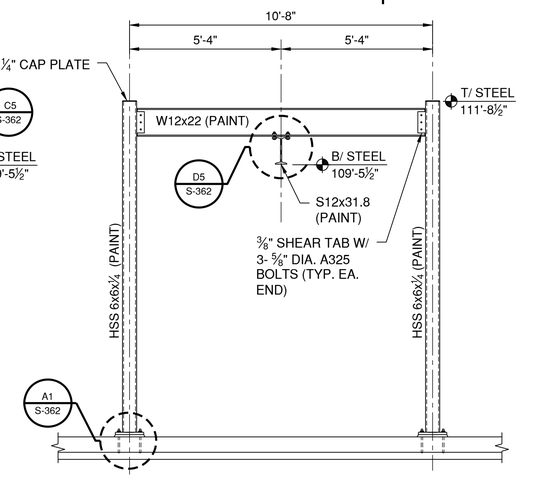

C4 SECTION
3/8"=1'-0"

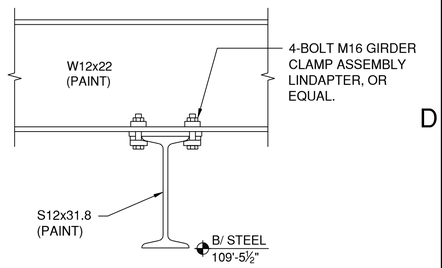

D5 DETAIL
1 1/2"=1'-0"

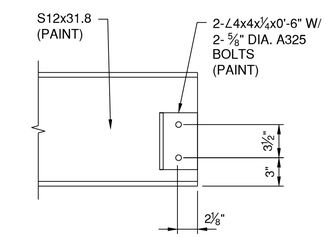

C5 DETAIL
1 1/2"=1'-0"

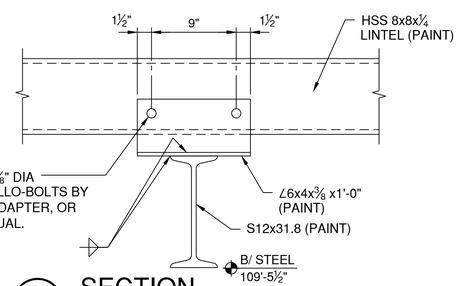

B1 SECTION
1 1/2"=1'-0"

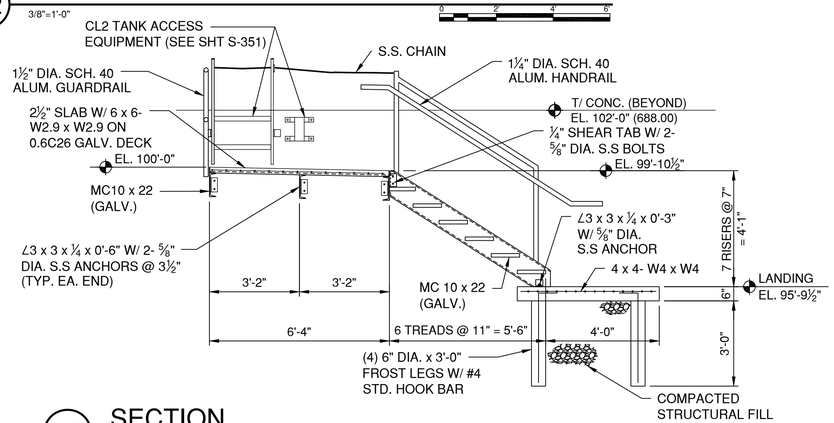

B2 SECTION
3/8"=1'-0"

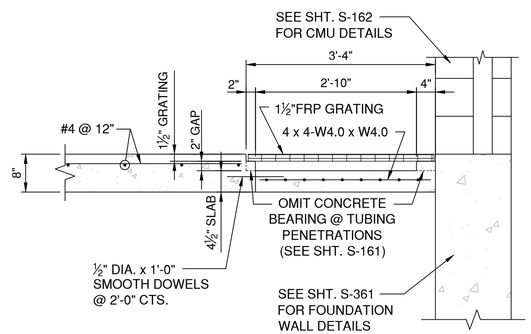

B5 SECTION
3/4" = 1'-0"

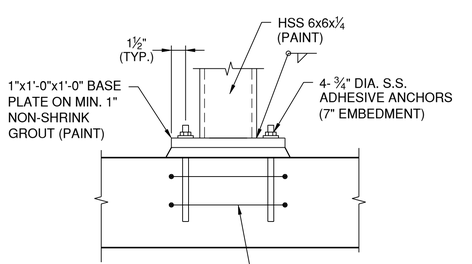

A1 DETAIL
1 1/2"=1'-0"

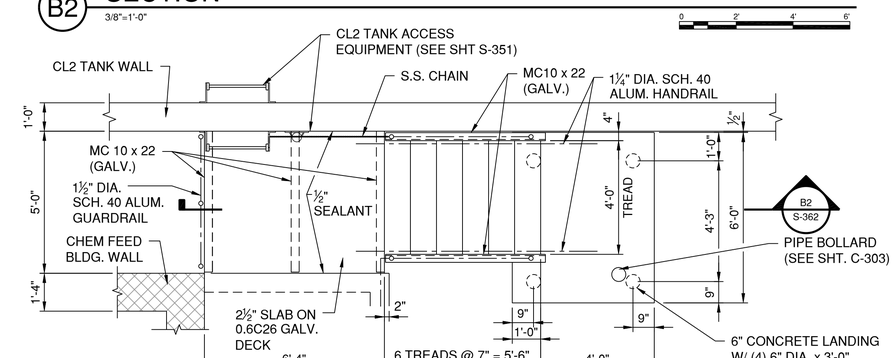

A2 STAIR PLAN
3/8"=1'-0"

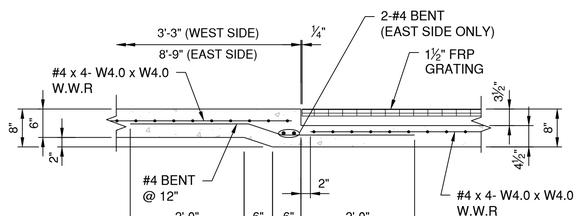

A5 SECTION
3/4" = 1'-0"

CMT
License No. 184-000613
CONSULTANTS

MAY 2015

CSO SATELLITE TREATMENT FACILITY CONTRACT NO. 1

OWNER

MATTOON
MATTOON, ILLINOIS: *Working Together to Build the Future*

CITY OF MATTOON

MATTOON, ILLINOIS

MARK	DATE	DESCRIPTION

PROJECT NO:	12078-03-00
CAD DWG FILE:	120780300-S-362.DWG
DESIGNED BY:	JJF
DRAWN BY:	JJF/KMM
CHECKED BY:	JJF
APPROVED BY:	TKB
COPYRIGHT:	CRAWFORD, MURPHY & TILLY, INC. 2015

SHEET TITLE

CHEM FEED BUILDING LOADING DOCK SECTIONS & DETAILS

S-362

SHEET 53 OF 128

Path: J:\Mattoon\12078-03\Draw\Sheets\1-CSO Satellite Treatment\120780300-S-362.dwg
Date: Wednesday, June 17, 2015 11:52:48 AM

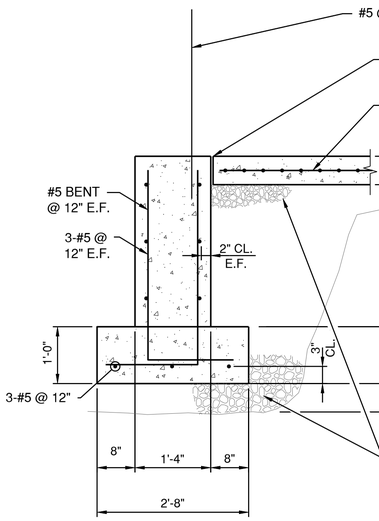

D1 SECTION
3/4"=1'-0"

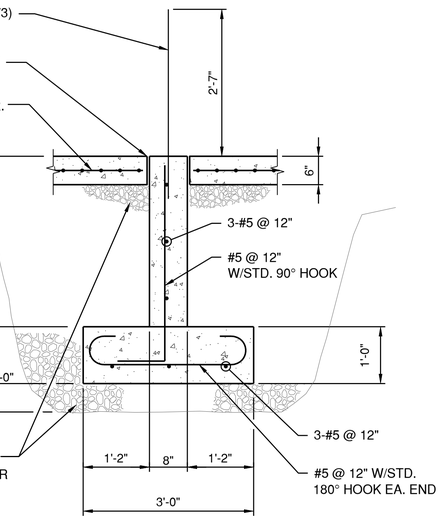

D2 SECTION
3/4"=1'-0"

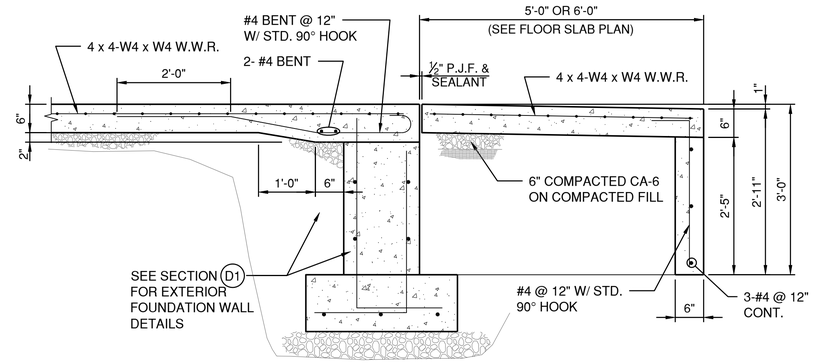

D4 SECTION THRU DOORS
3/4"=1'-0"

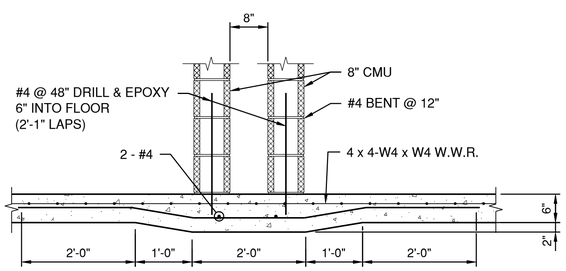

B1 SECTION
3/4"=1'-0"

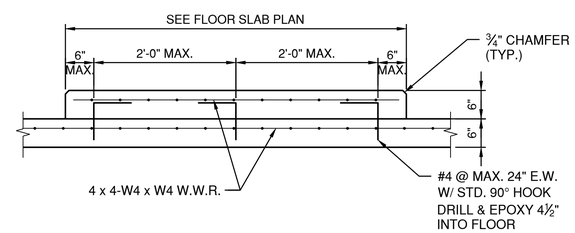

B3 BLOWER/ PUMP PAD DETAIL
3/4"=1'-0"

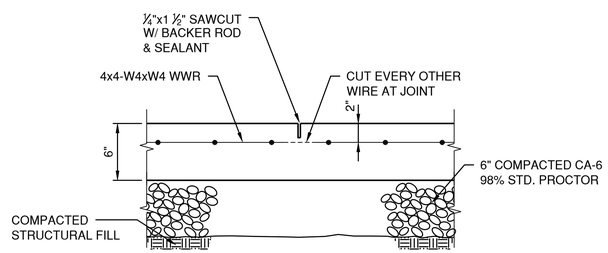

A1 CONTRACTION JOINT DETAIL
1 1/2" = 1'-0"

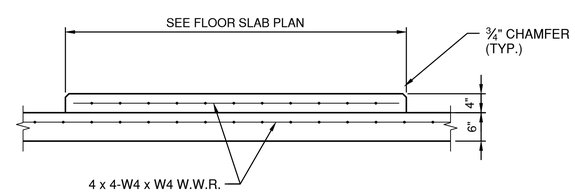

A3 ELECTRICAL HOUSEKEEPING PAD DETAIL
3/4"=1'-0"

CMT

License No. 184-000613

CONSULTANTS

MAY 2015

CSO SATELLITE
TREATMENT FACILITY
CONTRACT NO. 1

OWNER

MATTOON
MATTOON, ILLINOIS: *Working Together to Build the Future*

CITY OF MATTOON

MATTOON, ILLINOIS

MARK	DATE	DESCRIPTION

PROJECT NO:	12078-03-00
CAD DWG FILE:	120780300-S-371.DWG
DESIGNED BY:	JJF
DRAWN BY:	JJF/KMM
CHECKED BY:	JJF
APPROVED BY:	[illegible]

COPYRIGHT: CRAWFORD, MURPHY & TILLY, INC. 2015

SHEET TITLE

BLOWER-ELECTRICAL
BUILDING SECTION &
DETAILS

S-371

SHEET 54 OF 128

Path: J:\Mattoon\12078-03\Draw\Sheets\1-CSO Satellite Treatment\120780300-S-371.dwg
Date: Wednesday, June 17, 2015 11:52:58 AM

SYMBOLS USED AS ABBREVIATIONS:

∠	ANGLE
℄	CENTERLINE
[	CHANNEL
D	PENNY
∟	PERPENDICULAR
⅊	PLATE
Ø	ROUND

ABBREVIATIONS:

ABV	ABOVE
AFF	ABOVE FINISHED FLOOR
ASC	ABOVE SUSPENDED CEILING
ACC	ACCESS
ACFL	ACCESS FLOOR
AP	ACCESS PANEL
ACP	ACOUSTICAL CEILING PANEL
ACPL	ACOUSTICAL PLASTER
ACT	ACOUSTICAL CEILING TILE
ACR	ACRYLIC PLASTIC
ADD	ADDENDUM
ADH	ADHESIVE
ADJ	ADJACENT
ADJ	ADJUSTABLE
AGG	AGGREGATE
A/C	AIR CONDITIONING
ALT	ALTERNATE
ALUM	ALUMINUM
ANC	ANCHOR, ANCHORAGE
AB	ANCHOR BOLT
ANOD	ANODIZED
APPROX	APPROXIMATE
ARCH	ARCHITECT (URAL)
AD	AREA DRAIN
ASPH	ASPHALT
AT	ASPHALT TILE
AUTO	AUTOMATIC
BP	BACK PLASTER (ED)
BSMT	BASEMENT
BRG	BEARING
BPL	BEARING PLATE
BJT	BED JOINT
BM	BENCH MARK
BLW	BELOW
BTWN	BETWEEN
BVL	BEVELED
BIT	BITUMINOUS
BLK	BLOCK
BLKG	BLOCKING
BO	BOARD
BS	BOTH SIDES
BL	BLIND
BW	BOTH WAYS
BOT	BOTTOM
BR	BRICK
BRZ	BRONZE
BLDG	BUILDING
BUR	BUILT UP ROOFING
BBD	BULLETIN BOARD
CAB	CABINET
CAD	CADMIUM
CPT	CARPET (ED)
CI	CAST IRON
CIPC	CAST-IN-PLACE CONCRETE
CST	CAST STONE
CB	CATCH BASIN
CK	CALK (ING), CAULK (ING)
CLG	CEILING
CHT	CEILING HEIGHT
CEM	CEMENT
PCPL	CEMENT PLASTER (PORTLAND)
CM	CENTIMETER (S)
CER	CERAMIC
CT	CERAMIC TILE
CMT	CERAMIC MOSAIC (TILE)
CBD	CHALKBOARD, CK.BD
CHAM	CHAMFER
CR	CURTAIN ROD
CIR	CIRCLE
CIRC	CIRCUMFERENCE
CLR	CLEAR (ANCE)
CLS	CLOSURE
CRC	COLD ROLLED CHANNEL
COL	COLUMN
COMB	COMBINATION
COMP	COMPRESS (ED), (ION), (IBLE)
CONC	CONCRETE
CMU	CONCRETE MASONRY UNIT (BLOCK)
CX	CONNECTION
CONST	CONSTRUCTION
CONT	CONTINUOUS OR CONTINUE
CONTR	CONTRACT (OR)
CLL	CONTRACT LIMIT LINE
CJT	CONTROL JOINT
CPR	COPPER
CG	CORNER GUARD
CORR	CORRIDOR
CTR	CENTER
CFL	COUNTERFLASHING
CS	COUNTERSINK
CTSX	COUNTERSUNK SCREW
CRS	COURSE (S)
CRG	CROSS GRAIN
CUFT	CUBIC FOOT
CYD	CUBIC YARD
DPR	DAMPER
DP	DAMPPROOFING
DL	DEAD LOAD
DEMO	DEMOLISH, DEMOLITION
DEP	DEPRESSED
DET	DETAIL
DIAG	DIAGONAL
DIA	DIAMETER
DIM	DIMENSION
DISP	DISPENSER
DIV	DIVISION
DR	DOOR
DA	DOUBLEACTING
DH	DOUBLE HUNG
DTA	DOVETAIL ANCHOR
DTS	DOVETAIL ANCHOR SLOT
DS	DOWNSPOUT
DRB	DRAIN BOARD
DT	DRAIN TILE
DWR	DRAWER
DWRG	DRAWING
DF	DRINKING FOUNTAIN
DW	DUMBWAITER
EF	EACH FACE
E.I.F.S.	EXTERIOR INSULATION & FINISH SYSTEM
EJ	EXPANSION JOINT
ELEC	ELECTRIC (AL)
EP	ELECTRICAL PANELBOARD
EWC	ELECTRIC WATER COOLER
EL	ELEVATION
ELEV	ELEVATION/ELEVATOR
EMERG	EMERGENCY
ENC	ENCLOSE (URE)
EQ	EQUAL
EQP	EQUIPMENT
EST	ESTIMATE
EXCA	EXCAVATE
EXH	EXHAUST
EXG	EXISTING
EXMP	EXPANDED METAL PLATE
EB	EXPANSION BOLT
EXP	EXPOSED
EXT	EXTERIOR
EXS	EXTRA STRONG
F. BATT	FIBERGLASS INSULATION
FBR	FACE BRICK
FOC	FACE OF CONCRETE
FOF	FACE OF FINISH
FOM	FACE OF MASONRY
FOS	FACE OF STUDS
FCU	FAN COIL UNIT
FAS	FASTEN, FASTENER
FN	FENCE
FBD	FIBERBOARD
FGL	FIBERGLASS
FIN	FINISH (ED)
FFE	FINISHED FLOOR ELEVATION
FFL	FINISHED FLOOR LINE
FA	FIRE ALARM
FBRK	FIRE BRICK
FE	FIRE EXTINGUISHER
FEC	FIRE EXTINGUISHER CABINET
FH	FIRE HOSE STATION
FP	FIREPROOF
FRC	FIRE-RESISTANT COATING
FRT	FIRE-RETARDANT
FLASH	FLASHING
FHMS	FLATHEAD MACHINE SCREW
FHWS	FLATHEAD WOOD SCREW
FSR	FLEXIBLE SHEET ROOFING
FLR	FLOOR (ING)
FND	FEMININE NAPKIN DISPENSER
FNR	FEMININE NAPKIN RECEPTOR
FLCO	FLOOR CLEANOUT
FD	FLOOR DRAIN
FPL	FLOOR PLATE
FLUOR	FLUORESCENT
FJT	FLUSH JOINT
FTG	FOOTING
FRG	FORGED
FNDN	FOUNDATION
FR	FRAME (D), (ING)
FRA	FRESH AIR
FS	FULL SIZE
FURR	FURRED (ING)
FUT	FUTURE
GA	GAGE, GAUGE
GALV	GALVANIZED
GP	GALVANIZED PIPE
GKT	GASKET (ED)
GC	GENERAL CONTRACT (OR)
GL	GLASS, GLAZING
GBL	GLASS BLOCK
GLF	GLASS FIBER
GCMU	GLAZED CONCRETE MASONRY UNITS
GST	GLAZED STRUCTURAL TILE
GB	GRAB BAR
GR	GRADE, GRADING
GRN	GRANITE
GVL	GRAVEL
GF	GROUND FACE
GT	GROUT
GPDW	GYPSUM DRYWALL
GPDW(MR)	GYPSUM DRYWALL, MOISTURE RESISTANT
GPL	GYPSUM LATH
GPPL	GYPSUM PLASTER
GPT	GYPSUM TILE
HH	HANDHOLE
HBD	HARDBOARD
HDW	HARDWARE
HWD	HARDWOOD
HJT	HEAD JOINT
HDR	HEADER
HTG	HEATING
HVAC	HEATING/VENTILATING/AIR CONDITIONING
HD	HEAVYDUTY
HT	HEIGHT
HX	HEXAGONAL
HCS	HOLLOW CORE SLAB
HM	HOLLOW METAL
HK	HOOK (S)
HORZ	HORIZONTAL
HB	HOSE BIBB
WH	WATER HEATER
INCL	INCLUDE (D), (ION)
ID	INSIDE DIAMETER
INSUL	INSULATE (D), (ION)
INSCONC	INSULATING CONCRETE
INSF	INSULATING FILL
INT	INTERIOR
ILK	INTERLOCK
INTM	INTERMEDIATE
INV	INVERT
JC	JANITOR'S CLOSET
JT	JOINT
JF	JOINT FILLER
JST	JOIST
KPL	KICKPLATE
KIT	KITCHEN
KO	KNOCKOUT
LBL	LABEL
LAB	LABORATORY
LAD	LADDER
LB	POUND
LAM	LAMINATE (D)
LAV	LAVATORY
LH	LEFT HAND
LG	LENGTH
LT	LIGHT
LC	LIGHT CONTROL
LP	LIGHTPROOF
LTWT	LIGHTWEIGHT
LWC	LIGHTWEIGHT CONCRETE
LMS	LIMESTONE
LTL	LINTEL
LL	LIVE LOAD
LVR	LOUVER
LPT	LOW POINT
MB	MACHINE BOLT
MI	MALLEABLE IRON
MH	MANHOLE
MFR	MANUFACTURE (ER)
MRB	MARBLE
MAS	MASONRY
MO	MASONRY OPENING
MATL	MATERIAL (S)
MAX	MAXIMUM
MECH	MECHANIC (AL)
MC	MEDICINE CABINET
MED	MEDICAL
MBR	MEMBER
MEMB	MEMBRANE
MET/MTL	METAL
MBM	METAL BUILDING MANUFACTURER
MFD	METAL FLOOR DECKING
MTFR	METAL FURRING
MRD	METAL ROOF DECKING
MTHR	METAL THRESHOLD
MS	METAL STUD
MM	MILLIMETER (S)
MWK	MILLWORK
MIN	MINIMUM/MINERAL
MIR	MIRROR
MISC	MISCELLANEOUS
MOD	MODULAR
MLD	MOLDING, MOULDING
MR	MOP RECEPTOR
MTD	MOUNT (ED), (ING)
MOV	MOVEABLE
MULL	MULLION
NAT	NATURAL
NR	NOISE REDUCTION
NRC	NOISE REDUCTION COEFFICIENT
NOM	NOMINAL
NMT	NONMETALLIC
N	NORTH
NIC	NOT IN CONTRACT
NTS	NOT TO SCALE
OC	ON CENTER (S)
OP	OPAQUE
OPNG	OPENING
OJ	OPEN-WEB JOIST
OPP	OPPOSITE
OPH	OPPOSITE HAND
OPS	OPPOSITE SURFACE
OD	OUTSIDE DIAMETER
OA	OVERALL
OH	OVERHEAD
PNT	PAINT (ED)
PNL	PANEL
PB	PANIC BAR
PTD	PAPER TOWEL DISPENSER
PTR	PAPER TOWEL RECEPTOR
PAR	PARALLEL
PK	PARKING
PBD	PARTICLE BOARD
PTN	PARTITION
PV	PAVE (D), (ING)
PVMT	PAVEMENT
PED	PEDESTAL
PERF	PERFORATE (D)
PERI	PERIMETER
PLS	PLASTER
PLAM	PLASTIC LAMINATE
PL	PLATE & PROPERTY LINE
PG	PLATE GLASS
PLWD	PLYWOOD
PT	POINT
PVC	POLYVINYL CHLORIDE
PTC	POST-TENSIONED CONCRETE
PCF	POUNDS PER CUBIC FOOT
PFL	POUNDS PER LINEAL FOOT
PSF	POUNDS PER SQUARE FOOT
PSI	POUNDS PER SQUARE INCH
PCC	PRECAST CONCRETE
PFB	PREFABRICATE (D)
PFN	PREFINISHED
PRF	PREFORMED
PSC	PRESTRESSED CONCRETE
PL	PROPERTY LINE & PLATE
QT	QUARRY TILE
RBT	RABBET, REBATE
R	RADIUS
RL	RAIL (ING)
RWC	RAINWATER CONDUCTOR
REF	REFERENCE
RFL	REFLECT (ED), (IVE), (OR)
REFR	REFRIGERATOR
REG	REGISTER
REINF	REINFORCE (D), (ING)
RCP	REINFORCED CONCRETE PIPE
REM	REMOVE
RES	RESILIENT
RET	RETURN
RA	RETURN AIR
REV	REVISION (S), REVISED
RH	RIGHT HAND
ROW	RIGHT OF WAY
R	RISER
RVT	REVET
RD	ROOF DRAIN
RFH	FOOR HATCH
RFG	ROOFING
RM	ROOM
RO	ROUGH OPENING
RB	RUBBER BASE
RT	RUBBER TILE
RBL	RUBBLE STONE
SFGL	SAFETY GLASS
SCH	SCHEDULE
SCN	SCREEN
SLNT	SEALANT
STG	SEATING
SECT	SECTION
SS	SERVICE SINK
SHTH	SHEATHING
SHT	SHEET
SM	SHEET METAL
SH	SHELF, SHELVING
SHO	SHORE (D), (ING)
SIM	SIMILAR
SKL	SKYLIGHT
SL	SLEEVE
SD	SOAP DISPENSER / STORM DRAIN
SC	SOLID CORE
SP	SOUNDPROOF
SB	SPLASH BLOCK
SPC	SPACER
SPK	SPEAKER
SPL	SPECIAL
SPEC	SPECIFICATION (S)
SQ	SQUARE
SST	STAINLESS STEEL
STD	STANDARD
SSR	STANDING SEAM ROOF
STA	STATION
STL	STEEL
STOR	STORAGE
STR	STRUCTURAL
SCT	STRUCTRUAL CLAY TILE
SUSP	SUSPENDED
SYM	SYMMETRY (ICAL)
SYN	SYNTHETIC
SYS	SYSTEM
TBD-TK	TACKBOARD
TKS	TACKSTRIP
TEL	TELEPHONE
TV	TELEVISION
TEMP	TEMPERED
TC	TERRA COTTA
TERR	TERRAZZO
T	THERMOSTAT
THK	THICK (NESS)
THR	THRESHOLD
TLT	TOILET
TPTN	TOILET PARTITION
TPH	TOILET PAPER HOLDER
TOL	TOLERANCE
T&G	TONGUE AND GROOVE
TST	TOP OF STEEL
TW	TOP OF WALL
TB	TOWEL BAR
TR	TRANSOM
TYP	TYPICAL
UC	UNDERCUT
UNF	UNFINISHED
U.N.O.	UNLESS NOTED OTHERWISE
UV	UNIT VENTILATOR
UR	URINAL
VJ	V-JOINT (ED)
VB	VAPOR BARRIER & VINYL BASE
VAR	VARNISH
VNR	VENEER
VRM	VERMICULITE
VERT	VERTICAL
VG	VERTICAL GRAIN
VIN	VINYL
VCT	VINYL COMPOSITION TILE
VB	VINYL BASE & VAPOR BARRIER
VWC	VINYL WALL COVERING
VT	VINYL TILE
WSCT	WAINSCOT
WTW	WALL TO WALL
WH	WALL HUNG
WC	WATER CLOSET
WP	WATERPROOFING
WR	WATER REPELLENT
WS	WATERSTOP
WWF	WELDED WIRE FABRIC
W	WIDTH, WIDE
WDW	WINDOW
WG	WIRED GLASS
WM	WIRE MESH
WO	WITHOUT
WD	WOOD
WB	WOOD BASE
WI	WROUGHT IRON
W/D	WASHER / DRYER

CLASSIFIED LOCATIONS

(PROJECT LOCATIONS OR STRUCTURES NOT LISTED BELOW ARE CONSIDERED "UNCLASSIFIED")

THE FOLLOWING LOCATIONS AND LIMITS ARE CONSIDERED CLASSIFIED (HAZARDOUS) LOCATIONS. ALL ELECTRICALEQUIPMENT AND ELECTRICAL WIRING METHODS SHALL COMPLY WITH THE APPLICABLE SECTIONS OF THE NATIONAL ELECTRICAL CODE (NFPA-70) ARTICLE 500 AND 501 WHETHER OR NOT SPECIFICALLY NOTED ELSEWHERE.

LOCATION NAME	HAZARDOUS CLASSIFICATION			LIMITS OF CLASSIFICATION (HAZARDOUS) RATING
	CLASS	DIVISION	GROUP	
SCREEN FACILITY	1	1	D	ENCLOSED SPACE
SCREEN FACILITY	1	2	D	WITHIN A 10 FT ENVELOPE AROUND EQUIPMENT AND OPEN CHANNEL
INFLUENT PUMP STATION, WETWELL AND HEADWORKS	1	1	D	ENCLOSED SPACE
FIRST FLUSH TANK	1	1	D	AREA INSIDE TO TOP OF WALL
FIRST FLUSH TANK	1	2	D	AREA FROM TOP OF WALL TO 18" ABOVE TOP OF THE WALL AND SAME 18" FOR A 10 FT PERIMETER AROUND THE BASIN
EXISTING SCREEN BUILDING	1	1	D	ENCLOSED SPACE

PROJECT CRITERIA

APPLICABLE CODES

1997 IAC - ILLINOIS ACCESSIBILITY CODE

2003 IBC - INTERNATIONAL BUILDING CODE

2003 IMC - INTERNATIONAL MECHANICAL CODE

2008 NEC - NATIONAL ELECTRIC CODE

2003 IFC - INTERNATIONAL FIRE CODE

2004 ISPC - ILLINOIS STATE PLUMBING CODE

2012 IECC - INTERNATIONAL ENERGY CONSERVATION CODE

DESIGN CRITERIA

BUILDING:	USE GROUP:	TYPE OF CONSTRUCTION:	SPRINKLED:	FIRE PROTECTION:	SQUARE FOOTAGE:	MAX. BUILDING HEIGHT:
SCREEN BUILDING	F2	TYPE 2B	NONE	UNPROTECTED	= 583 SF.	1 STORY / 13'-6"
BLOWER AND ELECTRICAL BUILDING	F2	TYPE 2B	NONE	UNPROTECTED	= 1,067 SF.	1 STORY / 13'-6"
CHEMICAL FEED BUILDING	F2	TYPE 2B	NONE	UNPROTECTED	= 1,000 SF.	1 STORY / 14'-10"

CMT

License No. 184-000613

CONSULTANTS

MAY 2015

CSO SATELLITE TREATMENT FACILITY CONTRACT NO. 1

OWNER

MATTOON

MATTOON, ILLINOIS: *Working Together to Build the Future*

CITY OF MATTOON

MATTOON, ILLINOIS

MARK	DATE	DESCRIPTION

PROJECT NO:	12078-03-00
CAD DWG FILE:	120780300-A-001.DWG
DESIGNED BY:	GTC
DRAWN BY:	DJ
CHECKED BY:	GTC
APPROVED BY:	TEB

COPYRIGHT: CRAWFORD, MURPHY & TILLY, INC. 2015

SHEET TITLE

ABBREVIATIONS AND PROJECT CRITERIA

A-001

Path: J:\Mattoon\12078-03\Draw\Sheets\1-CSO Satellite Treatment\120780300-A-001.dwg
Date: Wednesday, June 17, 2015 11:53:57 AM

MATERIAL DESIGNATIONS AND DETAILS SYMBOLS

PLAN SECTION

- EARTH
- POROUS FILL (STONE OR GRAVEL, ETC,)
- ROCK
- LIGHTWIEGHT CONCRETE (OR CONCRETE FILL)
- STRUCTURAL CONCRETE (CAST-IN-PLACE PRECAST CAST STONE)
- BRICK (COMMON OR FACE)
- CONCRETE BLOCK (CMU)
- CUT STONE
- ALUMINUM
- METAL, STEEL (LARGE SCALE)
- METAL (SMALL SCALE STRUCTURAL & SHEET)
- PLYWOOD (LARGE SCALE)
- WOOD FINISHED
- WOOD ROUGH
- WOOD BLOCKING
- INSULATION (LOOSE OR BATT)
- INSULATION (RIGID)
- EXPANSION MATERIAL
- EXTERIOR INSULATION & FINISH SYSTEM
- GLASS (LARGE SCALE)
- ACOUSTICAL TILE
- CERAMIC TILE
- CARPET
- PLASTER, SAND, CEMENT, GROUT
- RESILIENT FLOORING
- TERRAZZO

ELEVATION

- CONCRETE, PLASTER
- BRICK
- CERAMIC TILE
- METAL
- GLAZING

DETAIL SYMBOLS

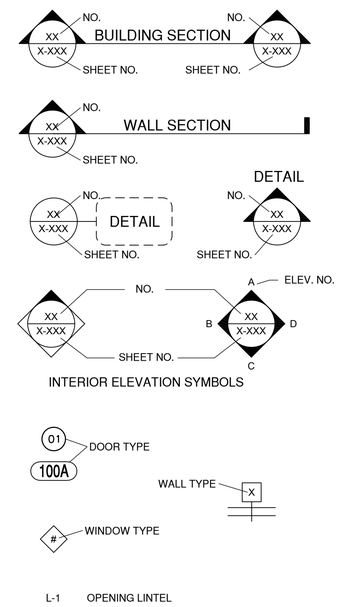

INTERIOR ELEVATION SYMBOLS

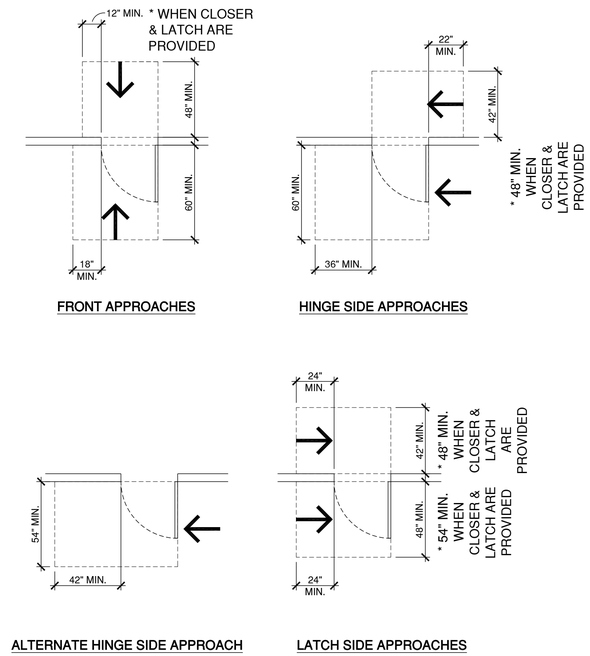

MANEUVERING CLEARANCES AT DOORS

* HANDLES, PULLS, LATCHES, LOCKS, AND OTHER OPERABLE PARTS ON ACCESSIBLE DOORS SHALL HAVE A SHAPE THAT IS EASY TO GRASP WITH ONE HAND AND DOES NOT REQUIRE TIGHT GRASPING, PINCHING, OR TWISTING OF THE WRIST TO OPERATE. OPERABLE PARTS OF SUCH HARDWARE SHALL BE 34" MIN. AND 48" MAX ABOVE THE FLOOR.

* DOOR SURFACE WITH 10" OF THE FLOOR, MEASURED VERTICALLY, SHALL BE A SMOOTH SURFACE ON THE PUSH SIDE EXTENDING THE FULL WIDTH OF THE DOOR.

EXCEPTIONS: DOORS THAT DO NOT EXTEND TO WITHIN 10" OF THE FLOOR.

* THE FORCE REQUIRED TO ACTIVATE THE CONTROL SHALL NOT EXCEED 5 LBF FOR INTERIOR HINGED DOORS.

* THE FORCE REQUIRED TO ACTIVATE THE CONTROL SHALL NOT EXCEED 8.5 LBF FOR EXTERIOR HINGED DOORS.

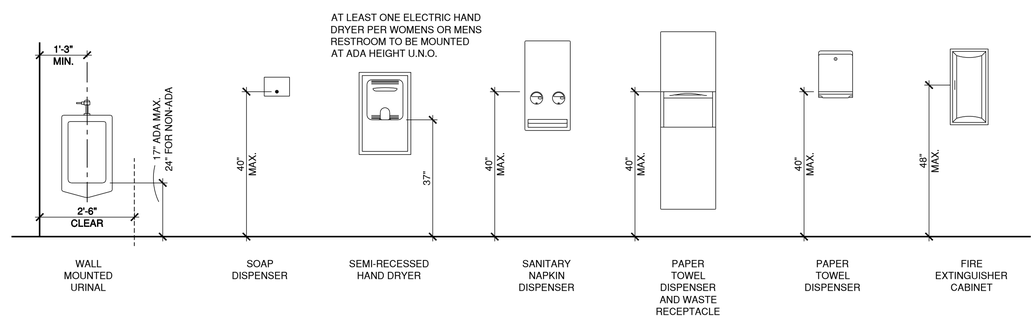

MISCELLANEOUS ACCESSIBILITY MOUNTING HEIGHTS

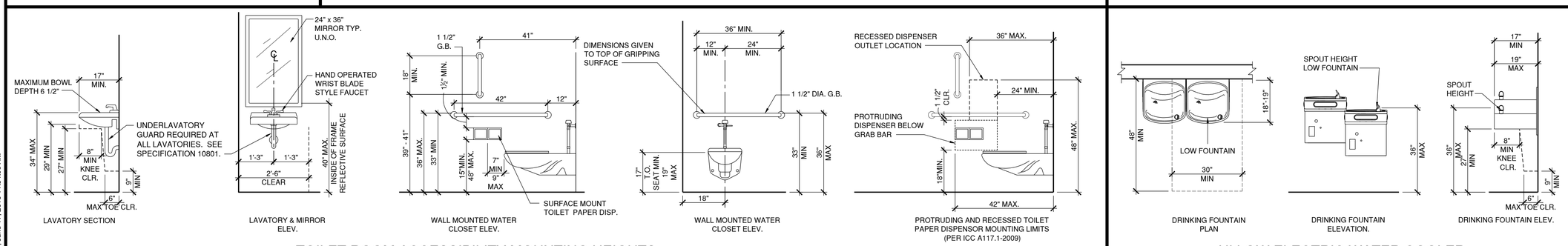

TOILET ROOM ACCESSIBILITY MOUNTING HEIGHTS

HI/LOW ELECTRIC WATER COOLER ACCESSIBILITY MOUNTING HEIGHTS

CMT

License No. 184-000613

CONSULTANTS

MAY 2015

CSO SATELLITE TREATMENT FACILITY CONTRACT NO. 1

OWNER

MATTOON

MATTOON, ILLINOIS: *Working Together to Build the Future*

CITY OF MATTOON

MATTOON, ILLINOIS

MARK	DATE	DESCRIPTION

PROJECT NO:	12078-03-00
CAD DWG FILE:	120780300-A-002.DWG
DESIGNED BY:	GTC
DRAWN BY:	DJ
CHECKED BY:	GTC
APPROVED BY:	[illegible]

COPYRIGHT: CRAWFORD, MURPHY & TILLY, INC. 2015

SHEET TITLE

ACCESSIBLE MOUNTING HEIGHTS SYMBOLS & NOTES

A-002

Path: J:\Mattoon\12078-03\Draw\Sheets\1-CSO Satellite Treatment\120780300-A-002.dwg
Date: Wednesday, June 17, 2015 11:54:06 AM

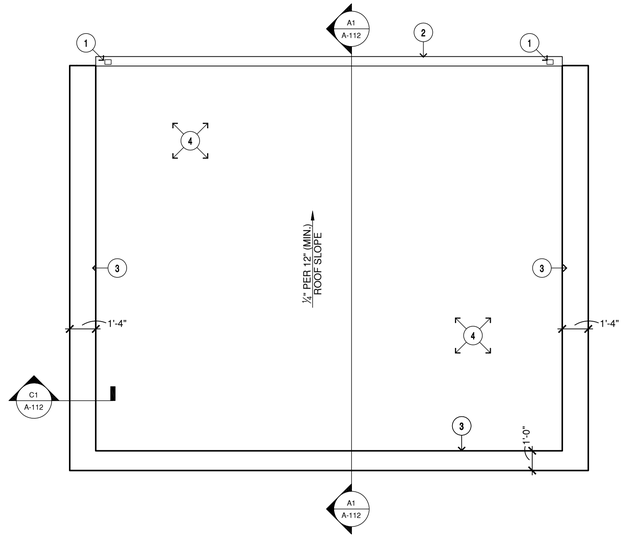

C1 SCREEN BUILDING - ROOF PLAN
1/4"=1'-0"

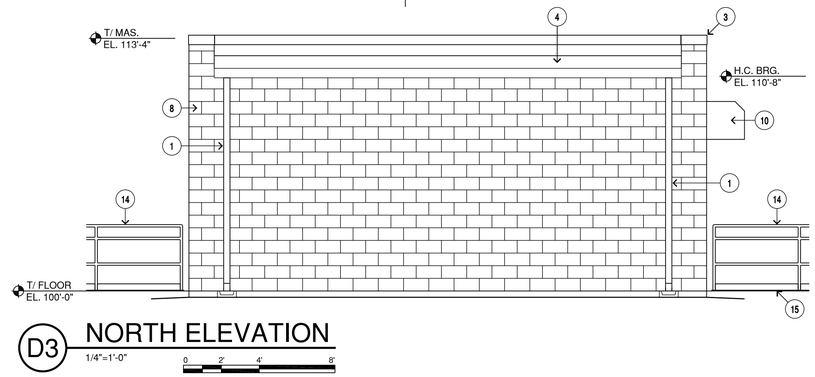

D3 NORTH ELEVATION
1/4"=1'-0"

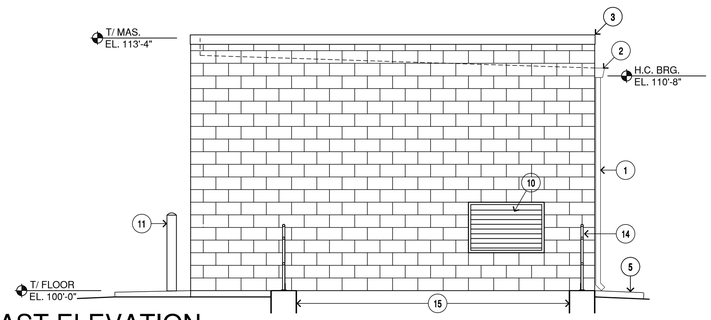

C3 EAST ELEVATION
1/4"=1'-0"

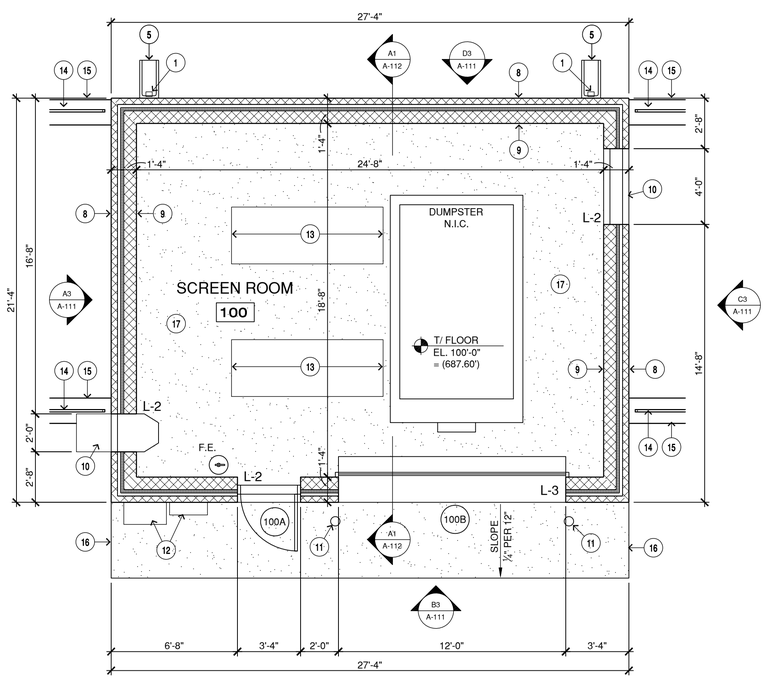

A1 SCREEN BUILDING - FLOOR PLAN
1/4"=1'-0"

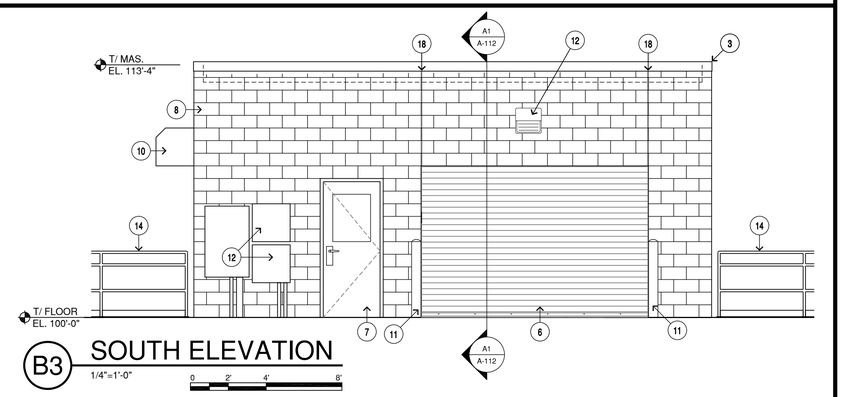

B3 SOUTH ELEVATION
1/4"=1'-0"

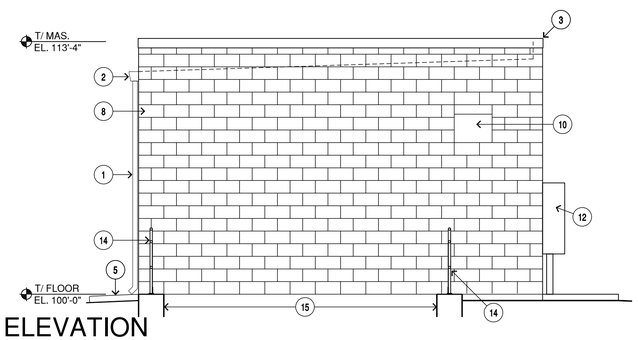

A3 WEST ELEVATION
1/4"=1'-0"

GENERAL NOTES:

1. ALL CONCRETE FLOOR CONTROL JOINTS TO BE SEALED WITH ELASTOMERIC SEALANT. SAW CUT AND SEAL COLD JOINTS TO MATCH CONTROL JOINTS.
2. SEE SHEET A-601 FOR DOOR DETAILS AND LINTEL (L-#) SCHEDULE.
3. SEE SHEET A-602 FOR ROOM FINISH SCHEDULE.

KEYED NOTES:

1. 3"x4" PRE-FINISHED ALUMINUM DOWNSPOUTS.
2. 6"x6" ALUMINUM GUTTER.
3. PRE-FINISHED ALUMINUM PARAPET CAP.
4. FULLY ADHERED 60 MIL. EPDM ROOF
5. 12"x30" CONCRETE SPLASH BLOCK.
6. ANODIZED ALUMINUM AND INSULATED COILING DOOR. (SEE DOOR SCHEDULE)
7. ANODIZED ALUMINUM AND INSULATED ENTRY DOOR. (SEE DOOR SCHEDULE)
8. 4" SPLIT FACE CMU EXTERIOR WALL. (SEE WALL SECTIONS FOR DETAILS)
9. 8" CMU INTERIOR WALL - PAINT. (SEE WALL SECTIONS FOR DETAILS)
10. FANS AND LOUVERS (SEE MECHANICAL DRAWINGS FOR DETAILS)
11. BOLLARDS (SEE CIVIL DRAWINGS FOR TYPICAL DETAIL)
12. ELECTRICAL PANELS, SWITCHES AND LIGHTING (SEE ELECTRICAL DRAWINGS FOR DETAILS)
13. FLOOR OPENINGS FOR SCREEN EQUIPMENT. (SEE STRUCTURAL DRAWINGS FOR DETAILS)
14. GUARDRAIL AND KICK PLATES (SEE STRUCTURAL DRAWINGS FOR LOCATIONS AND DETAILS)
15. FOUNDATION AND CHANNEL WALLS (SEE STRUCTURAL DRAWINGS FOR DETAILS)
16. CONCRETE STOOP (SEE STRUCTURAL DRAWINGS FOR DETAILS)
17. CONCRETE FLOOR (SEE STRUCTURAL DRAWINGS AND ROOM FINISH SCHEDULE FOR DETAILS)
18. MASONRY CONTROL JOINT

CMT

License No. 184-000613

CONSULTANTS

MAY 2015

CSO SATELLITE TREATMENT FACILITY CONTRACT NO. 1

OWNER

MATTOON
MATTOON, ILLINOIS: *Working Together to Build the Future*

CITY OF MATTOON

MATTOON, ILLINOIS

MARK	DATE	DESCRIPTION

PROJECT NO:	12078-03-00
CAD DWG FILE:	120780300-A-111.DWG
DESIGNED BY:	GTC
DRAWN BY:	DJ
CHECKED BY:	GTC
APPROVED BY:	

COPYRIGHT: CRAWFORD, MURPHY & TILLY, INC. 2015

SHEET TITLE

SCREEN BUILDING PLANS AND ELEVATIONS

A-111

SHEET 57 OF 128

Path: J:\Mattoon\12078-03\Draw\Sheets\1-CSO Satellite Treatment\120780300-A-111.dwg
Date: Wednesday, June 17, 2015 11:54:17 AM

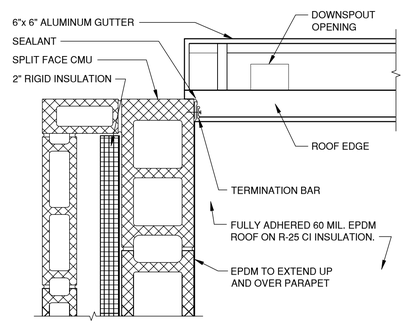

D1 PARAPET END WALL DET

1 1/2"=1'-0"

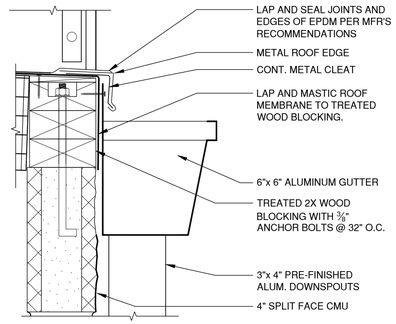

D2 ROOF EDGE DETAIL

3"=1'-0"

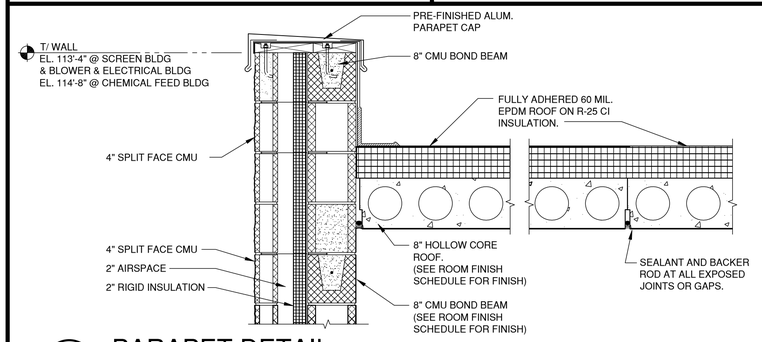

C1 PARAPET DETAIL

1"=1'-0"

0 1/2' 1' 2'

KEYED NOTES:

1. BOLLARDS (SEE CIVIL DRAWINGS FOR TYPICAL DETAIL)
2. CONCRETE FLOOR SLAB OVER 6 MIL. VAPOR BARRIER.
3. SPLIT FACE CMU BLOCK.
4. CMU BLOCK - PAINT
5. HOLLOW CORE ROOF SLAB - PAINT
6. FULLY ADHERED EPDM ROOF OVER RIGID INSULATION.
7. PRE-FINISHED ALUMINUM PARAPET CAP.
8. PRE-FINISHED ALUMINUM GUTTER AND DOWNSPOUT.
9. 12" x 30" CONCRETE SPLASH BLOCK

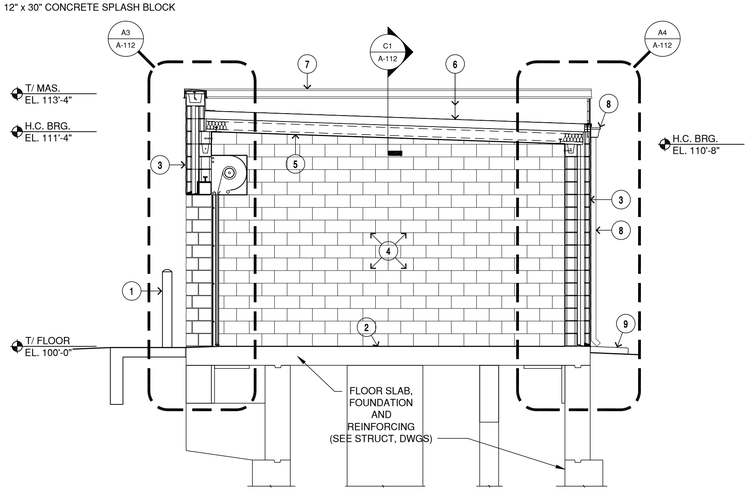

A1 SCREEN BUILDING - BUILDING SECTION

1/4"=1'-0"

0 2' 4' 8'

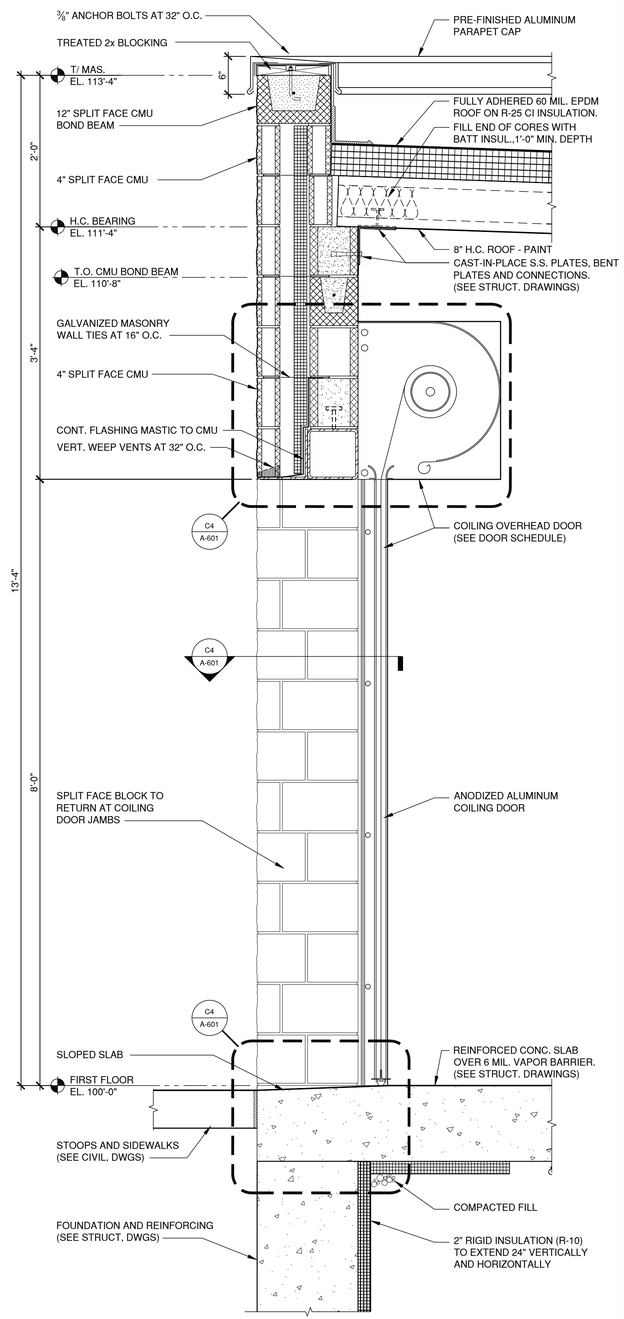

A3 WALL SECTION

1"=1'-0"

0 1/2' 1' 2'

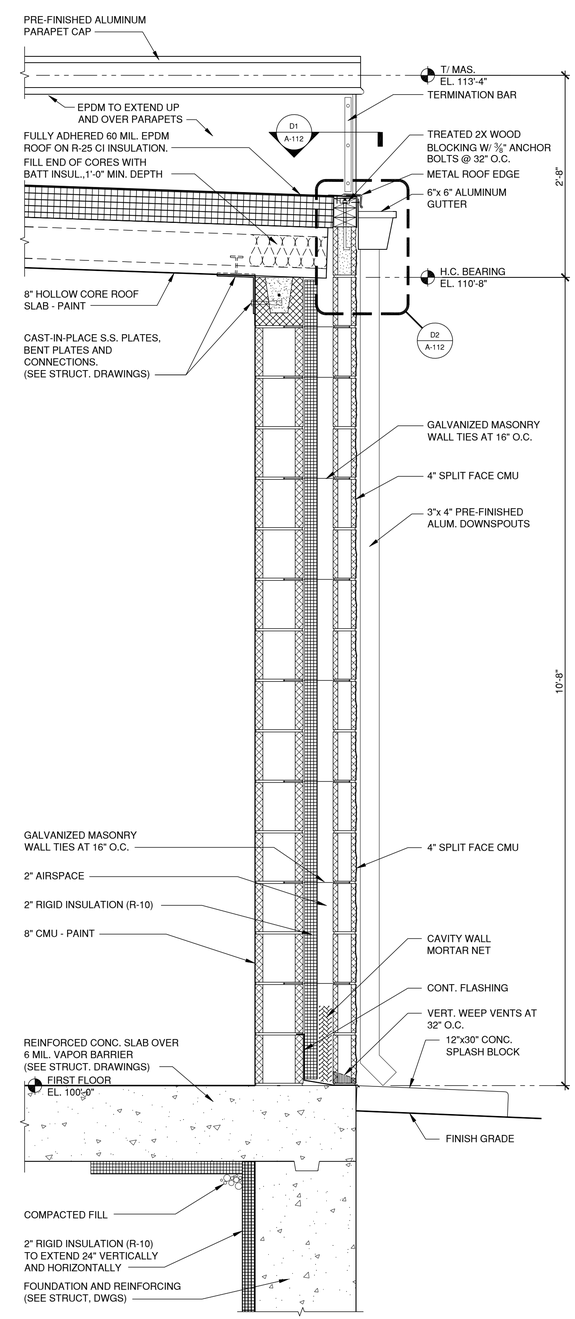

A4 WALL SECTION

1"=1'-0"

0 1/2' 1' 2'

CMT

License No. 184-000613

CONSULTANTS

MAY 2015

CSO SATELLITE TREATMENT FACILITY CONTRACT NO. 1

OWNER

MATTOON

MATTOON, ILLINOIS: *Working Together to Build the Future*

CITY OF MATTOON

MATTOON, ILLINOIS

MARK	DATE	DESCRIPTION

PROJECT NO:	12078-03-00
CAD DWG FILE:	120780300-A-112.DWG
DESIGNED BY:	GTC
DRAWN BY:	JJ
CHECKED BY:	GTC
APPROVED BY:	[illegible]

COPYRIGHT: CRAWFORD, MURPHY & TILLY, INC. 2015

SHEET TITLE

SCREEN BUILDING - BUILDING SECTION & DETAILS

A-112

Path: J:\Mattoon\12078-03\Draw\Sheets\1-CSO Satellite Treatment\120780300-A-112.dwg
Date: Wednesday, June 17, 2015 11:54:28 AM

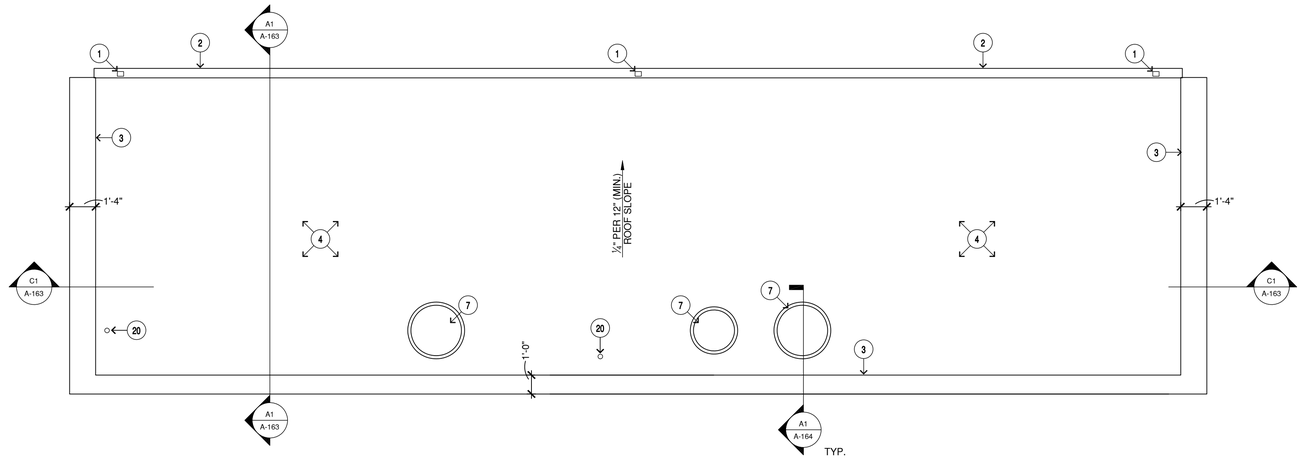

C3 ROOF PLAN

1/4"=1'-0"

N

GENERAL NOTES:

1. ALL CONTROL JOINTS TO BE SEALED WITH ELASTOMERIC SEALANT. SAW CUT AND SEAL COLD JOINTS TO MATCH CONTROL JOINTS.
2. SIDEWALKS, STOOPS, ROADS, LANES AND CURBS SHOWN FOR REFERENCE. (SEE CIVIL DRAWINGS FOR DETAILS)
3. STOOPS. (SEE STRUCTURAL DRAWINGS FOR TYPICAL DETAILS)
4. SEE SHEET A-601 FOR DOOR DETAILS AND LINTEL SCHEDULES.
5. SEE SHEET A-602 FOR ROOM FINISH SCHEDULE.

KEYED NOTES:

1. 3"x4" PRE-FINISHED ALUMINUM DOWNSPOUTS.
2. 6"x6" ALUMINUM GUTTER.
3. PRE-FINISHED ALUMINUM PARAPET CAP.
4. FULLY ADHERED 60 MIL. EPDM ROOF
5. FRP GRATING OVER RECESSED FLOOR. (SEE STRUCTURAL DRAWINGS FOR GRATING AND FOUNDATION DETAILS)
6. OVERHEAD CRANE RAIL SYSTEM AND SUPPORT STRUCTURE. (SEE STRUCTURAL DRAWING FOR DETAILS)
7. FANS, LOUVERS AND MECHANICAL DUCT WORK. (SEE MECHANICAL DRAWINGS FOR DETAILS)
8. EYE WASH STATION AND EMERGENCY SHOWER. (SEE PLUMBING DRAWINGS FOR DETAILS)
9. MASONRY EXPANSION JOINT
10. FRP WINDOW FRAMES WITH GAS TIGHT SEALS.
11. BOLLARDS (SEE CIVIL DRAWINGS FOR TYPICAL DETAIL)
12. CONCRETE STOOP.
13. ALUMINUM HANDRAILS, GUARDRAILS AND 4" KICK PLATES. (SEE STRUCTURAL DRAWINGS FOR DETAILS)
14. CONCRETE ON GALVANIZED STEEL STAIR LANDING, FRAMING. GALVANIZED STRINGERS WITH FRP GRATING. (SEE STRUCTURAL DRAWINGS FOR DETAILS)
15. SUPPORT SLAB BELOW SPARE TOTE AND CHEM FEED PUMP. (SEE STRUCTURAL DRAWINGS FOR DETAILS)
16. RECESSED SUPPORT SLAB BELOW TOTE SCALES (SEE STRUCTURAL DRAWINGS FOR DETAILS)
17. ALUMINUM DUCT WORK. HOLD TIGHT TO CMU WALL. (SEE MECHANICAL DRAWINGS FOR DETAILS)
18. GAS TIGHT SEALANT AT AND AROUND ALL WIRE AND PIPE PENETRATIONS FROM THE CHLORINE STORAGE ROOM AND CHLORINE FEED ROOM. (SEE PROCESS DRAWINGS FOR CHLORINE PIPING AND MONITORING DETAILS)
19. LANDSCAPING ROCK (SEE CIVIL DRAWINGS FOR DETAILS)
20. PLUMBING VENT (SEE PLUMBING DRAWINGS FOR DETAILS)

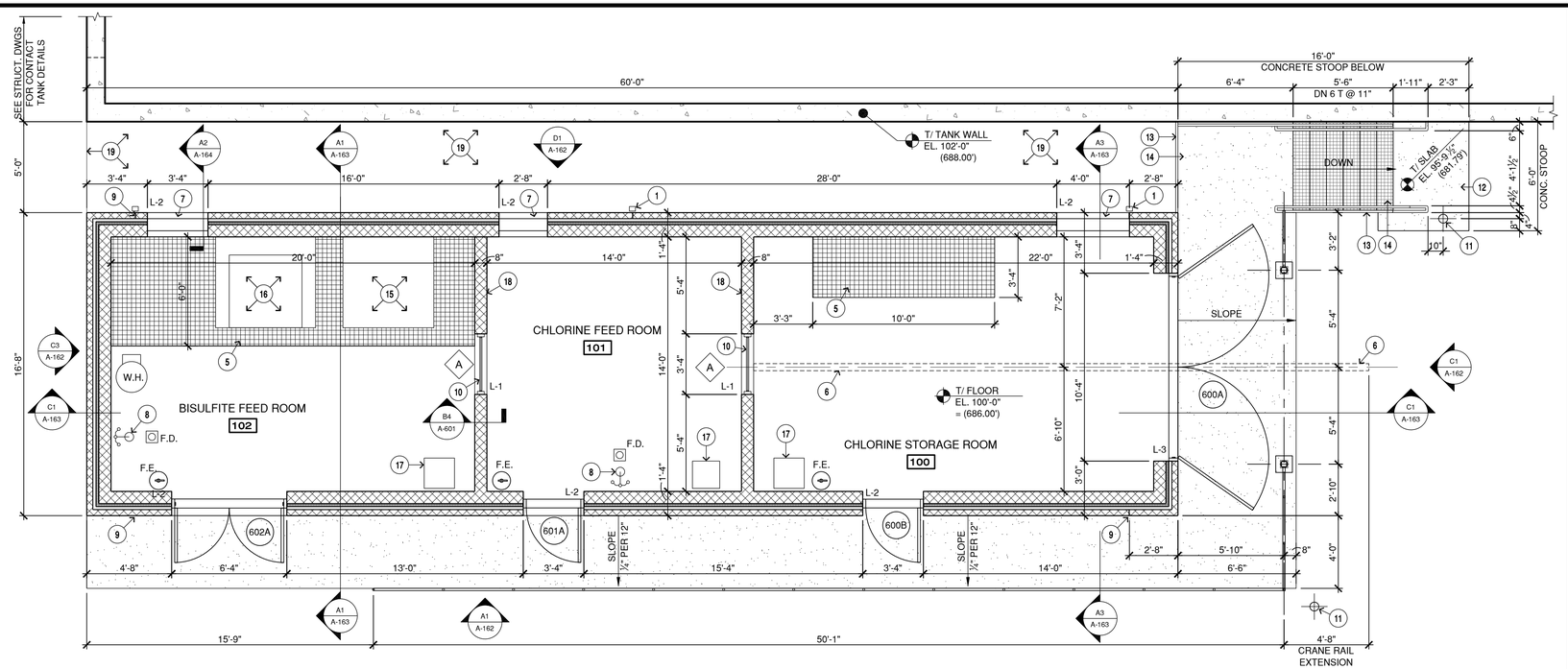

A1 FLOOR PLAN

1/4"=1'-0"

N

CMT

License No. 184-000613

CONSULTANTS

MAY 2015

CSO SATELLITE
TREATMENT FACILITY
CONTRACT NO. 1

OWNER

MATTOON

MATTOON, ILLINOIS: *Working Together to Build the Future*

CITY OF MATTOON

MATTOON, ILLINOIS

MARK	DATE	DESCRIPTION

PROJECT NO:	12078-03-00
CAD DWG FILE:	120780300-A-161.DWG
DESIGNED BY:	GTC
DRAWN BY:	DJ
CHECKED BY:	GTC
APPROVED BY:	TGB

COPYRIGHT: CRAWFORD, MURPHY & TILLY, INC. 2015

SHEET TITLE

CHEMICAL FEED BUILDING PLANS

A-161

Path: J:\Mattoon\12078-03\Draw\Sheets\1-CSO Satellite Treatment\120780300-A-161.dwg
Date: Wednesday, June 17, 2015 11:54:39 AM

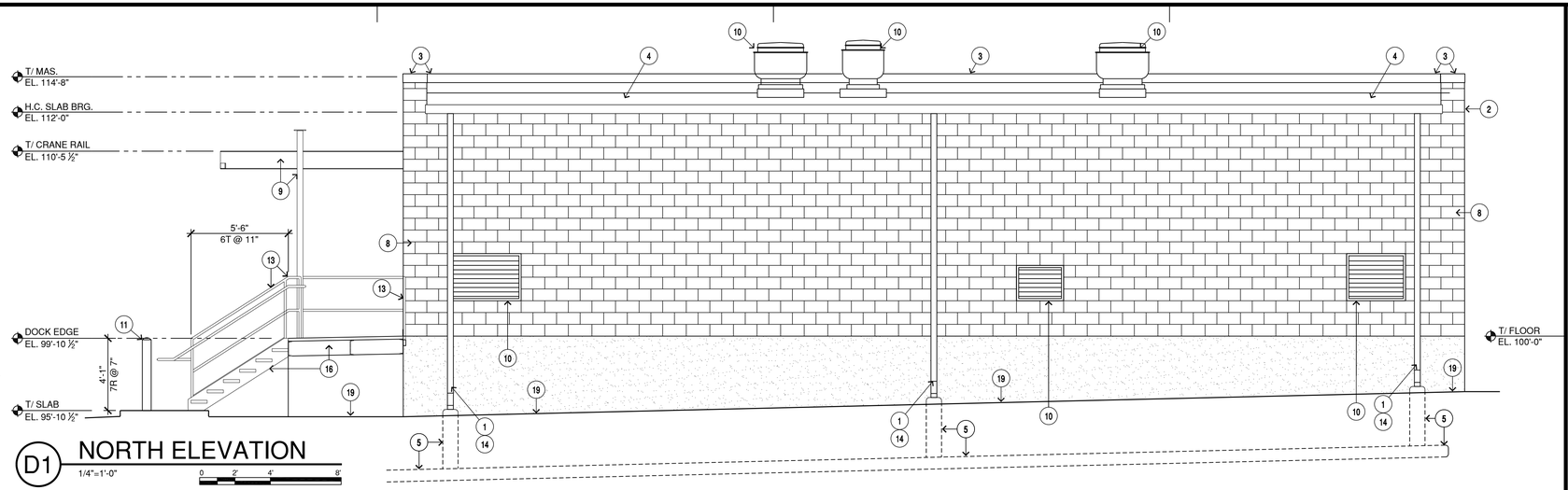

D1 NORTH ELEVATION

1/4"=1'-0"

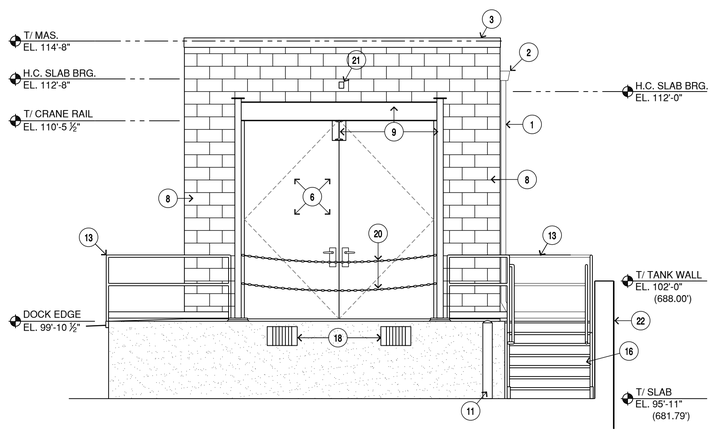

C1 EAST ELEVATION

1/4"=1'-0"

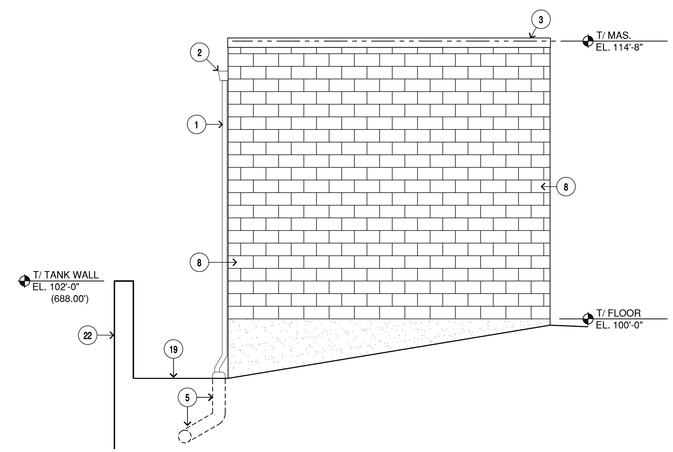

C3 WEST ELEVATION

1/4"=1'-0"

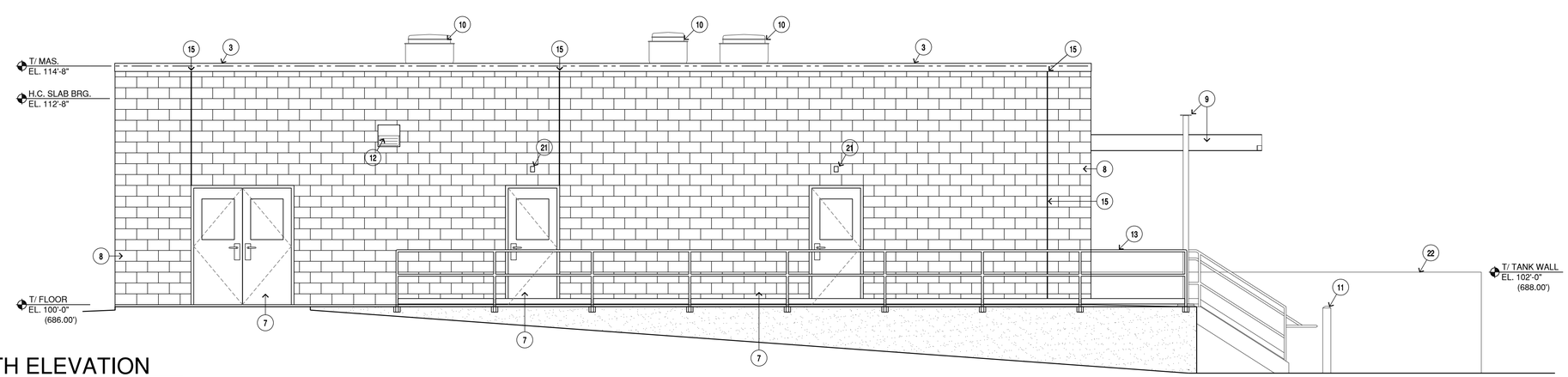

A1 SOUTH ELEVATION

1/4"=1'-0"

KEYED NOTES:

1. 3"x4" PRE-FINISHED ALUMINUM DOWNSPOUTS.
2. 6"x6" ALUMINUM GUTTER.
3. PRE-FINISHED ALUMINUM PARAPET CAP.
4. FULLY ADHERED 60 MIL. EPDM ROOF
5. HDPE DRAINAGE PIPE (SEE CIVIL DRAWINGS FOR DETAILS)
6. INSULATED FRP DOOR AND FRAME. (SEE DOOR SCHEDULE)
7. ANODIZED AND INSULATED ENTRY DOOR. (SEE DOOR SCHEDULE)
8. 4" SPLIT FACE CMU EXTERIOR WALL. (SEE WALL SECTIONS FOR DETAILS)
9. OVERHEAD CRANE RAIL SYSTEM AND SUPPORT STRUCTURE (SEE STRUCTURAL DRAWINGS FOR DETAILS)
10. FANS AND LOUVERS (SEE MECHANICAL DRAWINGS FOR DETAILS)
11. BOLLARD (SEE CIVIL DRAWINGS FOR TYPICAL DETAIL)
12. ELECTRICAL PANELS, SWITCHES AND LIGHTING (SEE ELECTRICAL DRAWINGS FOR DETAILS)
13. ALUMINUM HANDRAILS, GUARDRAILS AND 4" KICK PLATES. (SEE STRUCTURAL DRAWINGS FOR DETAILS)
14. MASONRY EXPANSION JOINT BEHIND DOWNSPOUT.
15. MASONRY EXPANSION JOINT.
16. GALVANIZED STEEL STAIR LANDING FRAMING AND STRINGERS WITH FRP GRATING. (SEE STRUCTURAL DRAWINGS FOR DETAILS)
17. GALVANIZED STEEL STAIR LANDING FRAMING AND STRINGERS WITH FRP GRATING. (SEE STRUCTURAL DRAWINGS FOR DETAILS)
18. LOADING DOCK BUMPER GUARDS. DURABLE CORPORATION MODEL: B5510-24-DS OR APPROVED EQUAL.
19. LANDSCAPING ROCK (SEE CIVIL DRAWINGS FOR DETAILS)
20. CHAINED OPENING. (SEE STRUCTURAL DRAWINGS FOR DETAILS)
21. EMERGENCY LIGHT FOR CHLORINE SPILL/ LEAK DETECTOR. (SEE ELECTRICAL DRAWINGS FOR DETAILS)
22. CONTACT TANK WALL. (SEE STRUCTURAL DRAWINGS FOR DETAILS)

CMT

License No. 184-000613

CONSULTANTS

MAY 2015

CSO SATELLITE TREATMENT FACILITY CONTRACT NO. 1

OWNER

MATTOON

MATTOON, ILLINOIS: *Working Together to Build the Future*

CITY OF MATTOON

MATTOON, ILLINOIS

MARK	DATE	DESCRIPTION

PROJECT NO:	12078-03-00
CAD DWG FILE:	120780300-A-162.DWG
DESIGNED BY:	GTC
DRAWN BY:	DJ
CHECKED BY:	GTC
APPROVED BY:	FEB

COPYRIGHT: CRAWFORD, MURPHY & TILLY, INC. 2015

SHEET TITLE

CHEMICAL FEED BUILDING ELEVATIONS

A-162

Path: J:\Mattoon\12078-03\Draw\Sheets\1-CSO Satellite Treatment\120780300-A-162.dwg
Date: Wednesday, June 17, 2015 11:54:51 AM

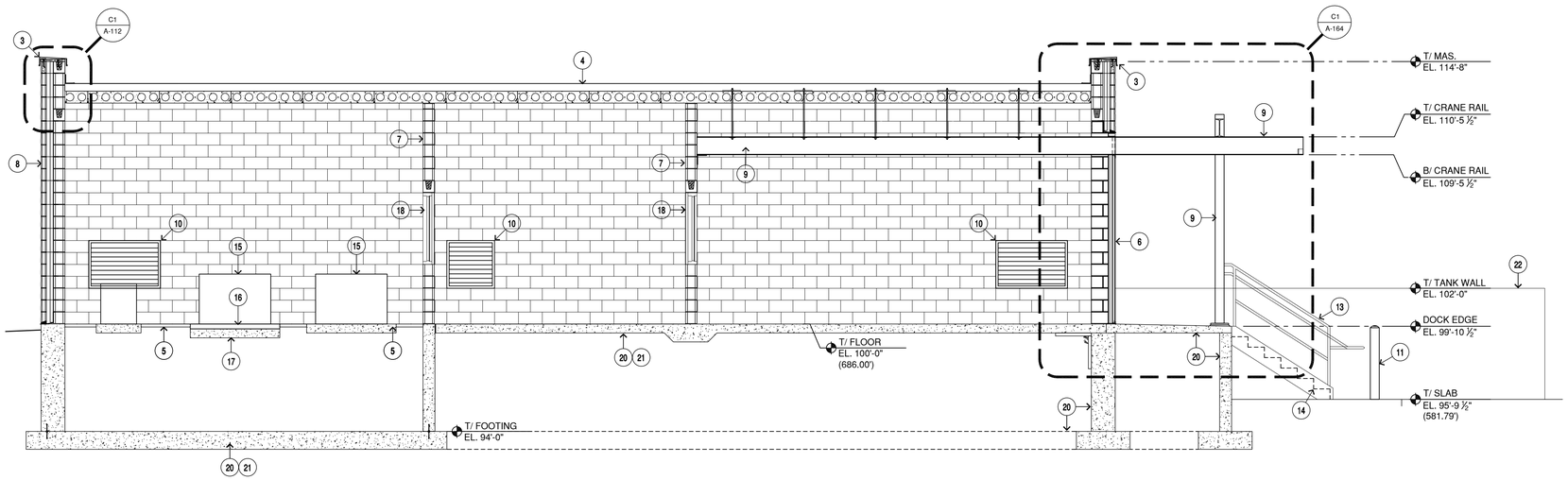

C1 BUILDING SECTION

1/4"=1'-0" 0 2' 4' 8'

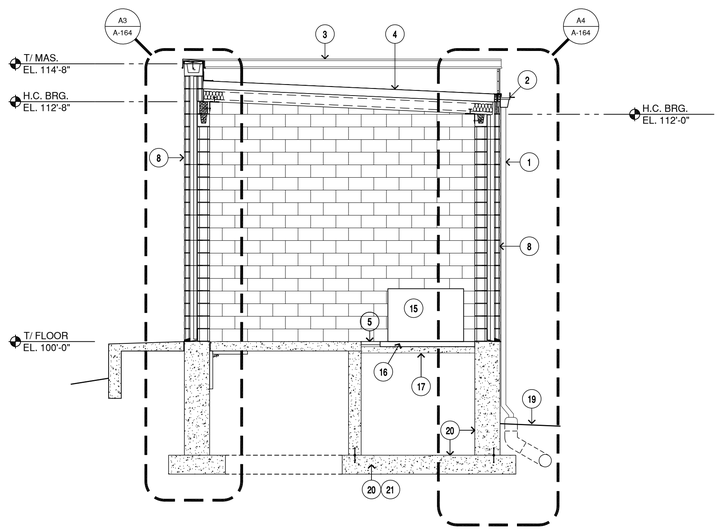

A1 BUILDING SECTION

1/4"=1'-0" 0 2' 4' 8'

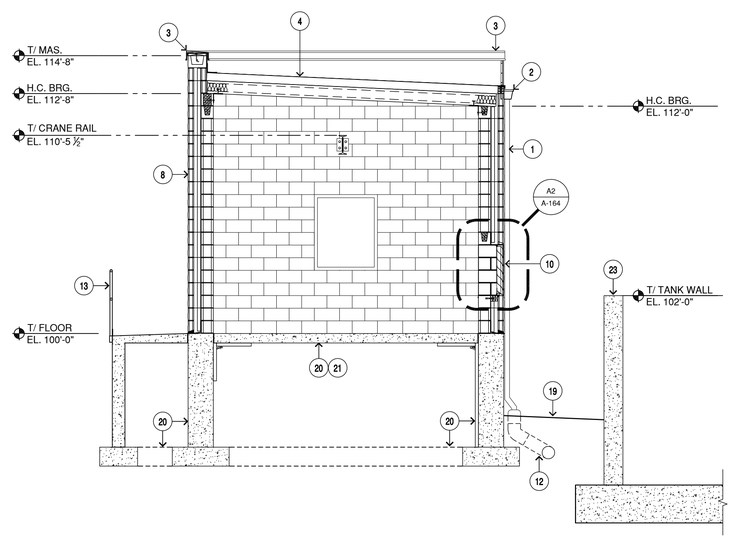

A3 BUILDING SECTION

1/4"=1'-0" 0 2' 4' 8'

KEYED NOTES:

1. 3"x4" PRE-FINISHED ALUMINUM DOWNSPOUTS.
2. 6"x6" ALUMINUM GUTTER.
3. PRE-FINISHED ALUMINUM PARAPET CAP.
4. FULLY ADHERED 60 MIL. EPDM ROOF
5. FRP GRATING OVER RECESSED FLOOR. (SEE STRUCTURAL DRAWINGS FOR GRATING AND FOUNDATION DETAILS)
6. INSULATED FRP DOOR AND FRAME. (SEE DOOR SCHEDULE)
7. 8" CMU WALL
8. 4" SPLIT FACE CMU EXTERIOR WALL. (SEE WALL SECTIONS FOR DETAILS)
9. OVERHEAD CRANE RAIL SYSTEM AND SUPPORT STRUCTURE (SEE STRUCTURAL DRAWINGS FOR DETAILS)
10. FANS AND LOUVERS (SEE MECHANICAL DRAWINGS FOR DETAILS)
11. BOLLARD (SEE CIVIL DRAWINGS FOR TYPICAL DETAIL)
12. HDPE DRAINAGE PIPE (SEE CIVIL DRAWINGS)
13. ALUMINUM HANDRAILS, GUARDRAILS AND 4" KICK PLATES. (SEE STRUCTURAL DRAWINGS FOR DETAILS)
14. GALVANIZED STEEL STAIR LANDING FRAMING AND STRINGERS WITH FRP GRATING. (SEE STRUCTURAL DRAWINGS FOR DETAILS)
15. BISULFITE TOTES (N.I.C.)
16. TOTE SCALES RECESSED TO ALIGN WITH FINISHED FLOOR (SEE PROCESS DRAWINGS FOR DETAILS)
17. RECESSED SUPPORT SLAB BELOW TOTE SCALES (SEE STRUCTURAL DRAWINGS FOR DETAILS)
18. FRP WINDOW FRAMES WITH GAS TIGHT SEALS.
19. LANDSCAPING ROCK. (SEE CIVIL DRAWINGS FOR DETAILS)
20. FOUNDATIONS, FOOTINGS AND SLABS (SEE STRUCTURAL DRAWINGS FOR DETAILS)
21. FLOOR SLAB OVER 6 MIL. VAPOR BARRIER (SEE STRUCTURAL DRAWINGS FOR DETAILS)
22. CONTACT TANK WALLS. (SEE STRUCTURAL DRAWINGS FOR DETAILS)

CMT

License No. 184-000613

CONSULTANTS

MAY 2015

CSO SATELLITE TREATMENT FACILITY CONTRACT NO. 1

OWNER

MATTOON

MATTOON, ILLINOIS: *Working Together to Build the Future*

CITY OF MATTOON

MATTOON, ILLINOIS

MARK	DATE	DESCRIPTION

PROJECT NO:	12078-03-00
CAD DWG FILE:	120780300-A-163.DWG
DESIGNED BY:	GTC
DRAWN BY:	DJ
CHECKED BY:	GTC
APPROVED BY:	TEB

COPYRIGHT: CRAWFORD, MURPHY & TILLY, INC. 2015

SHEET TITLE

CHEMICAL FEED BUILDING SECTIONS AND DETAILS

A-163

Path: J:\Mattoon\12078-03\Draw\Sheets\1-CSO Satellite Treatment\120780300-A-163.dwg
Date: Wednesday, June 17, 2015 11:55:04 AM

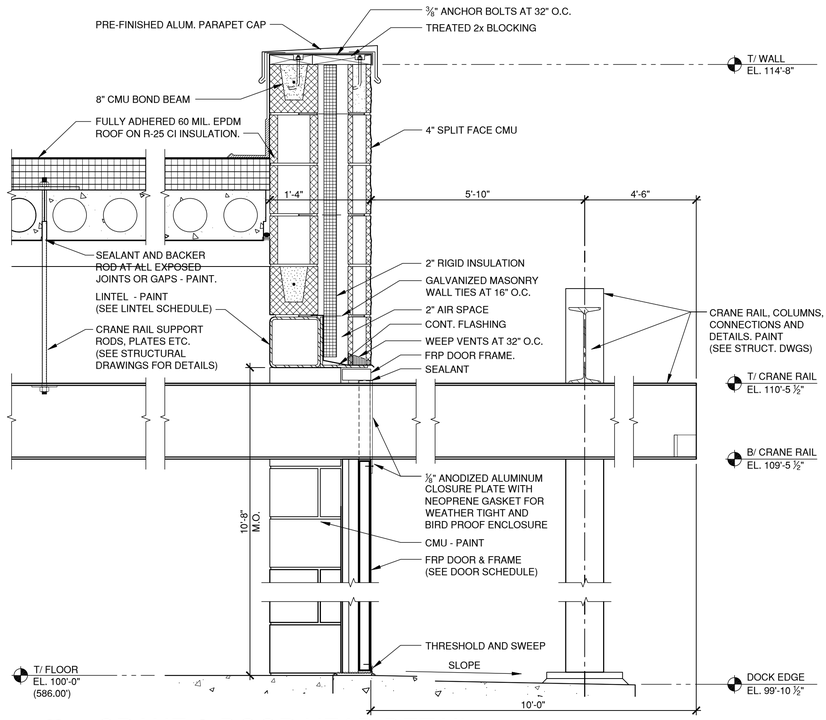

C1 CRANE & DOOR HEAD DETAIL

1"=1'-0"

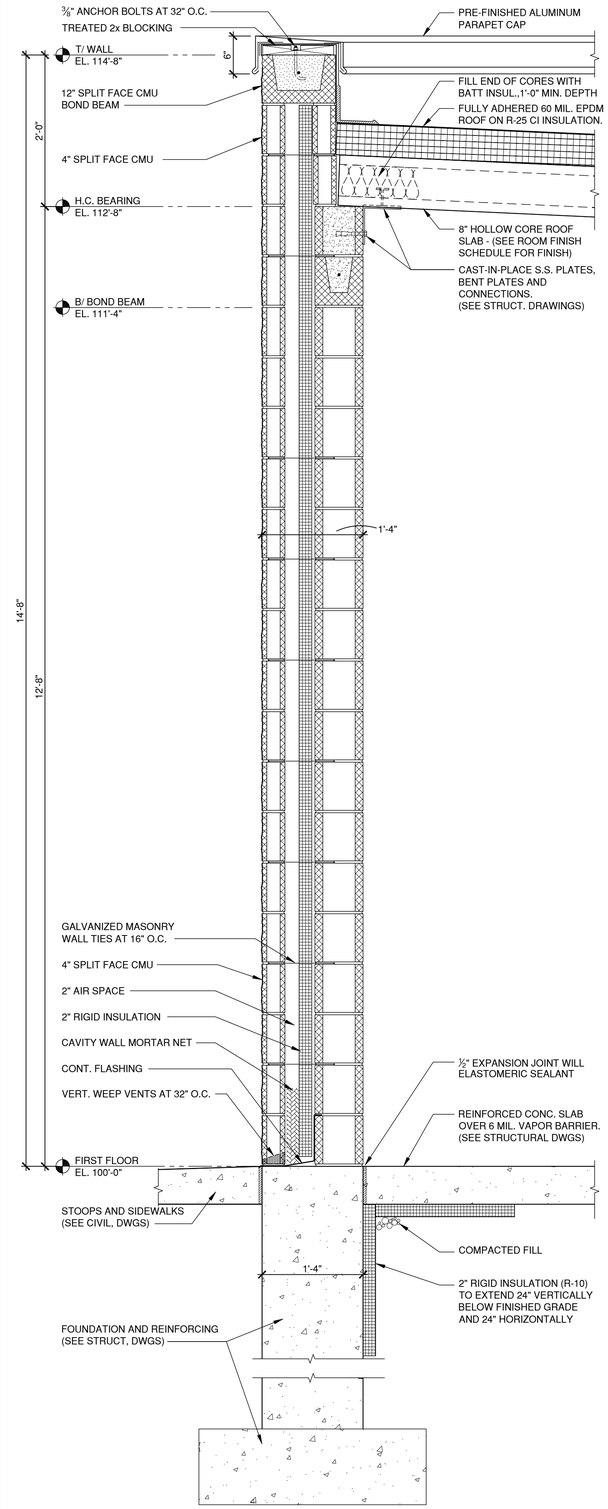

A3 WALL SECTION

1"=1'-0"

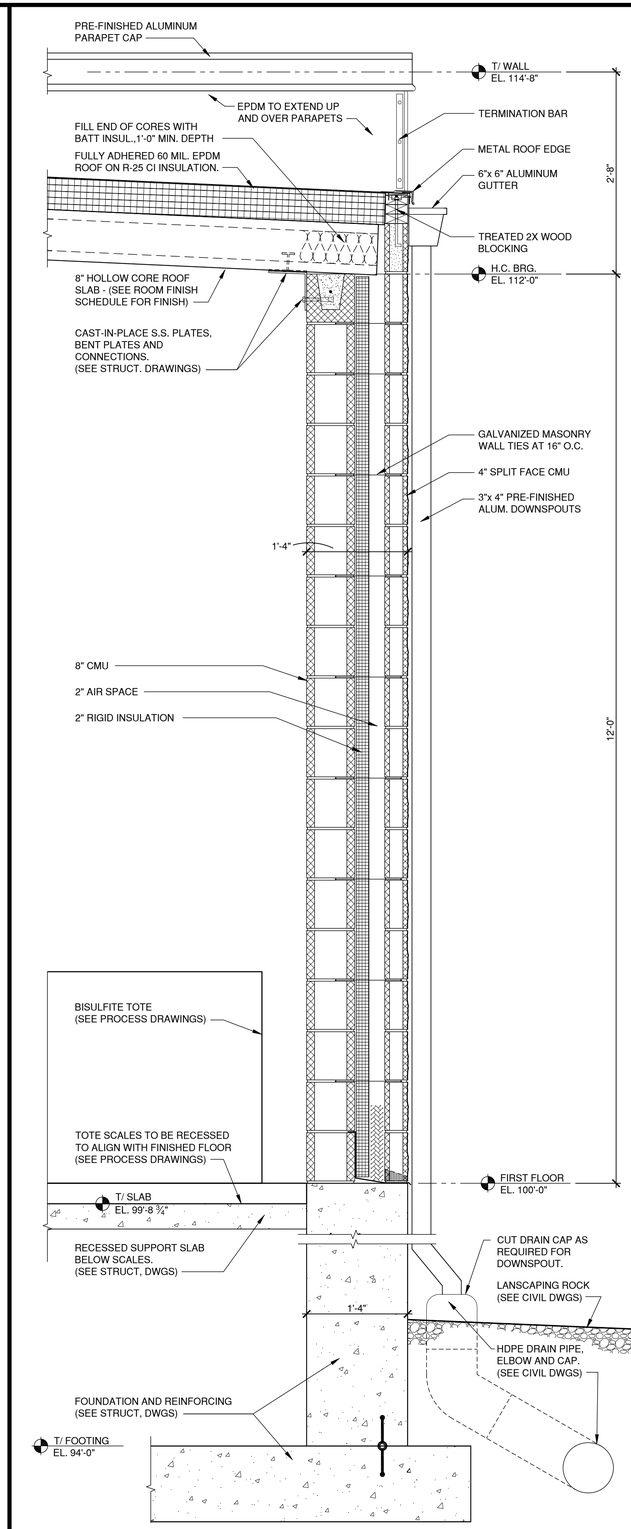

A4 WALL SECTION

1"=1'-0"

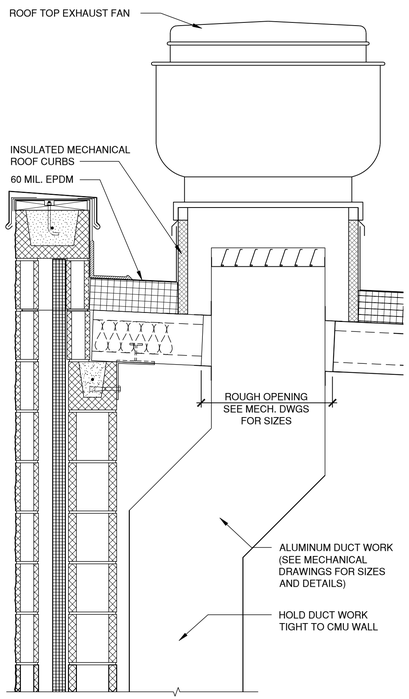

A1 ROOF CURB DETAIL

1"=1'-0"

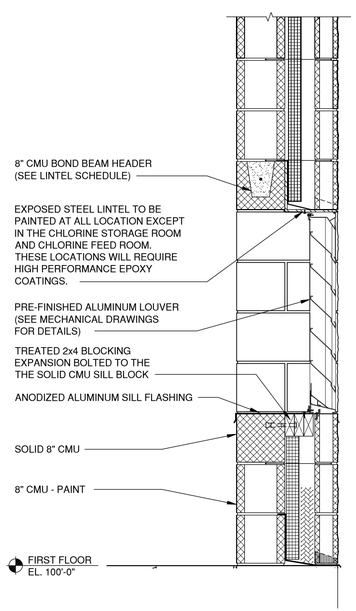

A2 WALL SECTION

1"=1'-0"

CMT

License No. 184-000613

CONSULTANTS

MAY 2015

CSO SATELLITE TREATMENT FACILITY CONTRACT NO. 1

OWNER

MATTOON

MATTOON, ILLINOIS: *Working Together to Build the Future*

CITY OF MATTOON

MATTOON, ILLINOIS

MARK	DATE	DESCRIPTION

PROJECT NO:	12078-03-00
CAD DWG FILE:	120780300-A-164.DWG
DESIGNED BY:	GTC
DRAWN BY:	DJ
CHECKED BY:	GTC
APPROVED BY:	

COPYRIGHT: CRAWFORD, MURPHY & TILLY, INC. 2015

SHEET TITLE

CHEMICAL FEED BUILDING - WALL SECTIONS & DETAILS

A-164

Path: J:\Mattoon\12078-03\Draw\Sheets\1-CSO Satellite Treatment\120780300-A-164.dwg
Date: Wednesday, June 17, 2015 11:55:20 AM

GENERAL NOTES:

1. ALL CONCRETE FLOOR CONTROL JOINTS TO BE SEALED WITH ELASTOMERIC SEALANT. SAW CUT AND SEAL COLD JOINTS TO MATCH CONTROL JOINTS.
2. STOOPS. (SEE STRUCTURAL DRAWINGS FOR TYPICAL DETAILS)
3. SEE SHEET A-601 FOR DOOR DETAILS AND LINTEL (L-#) SCHEDULE.
4. SEE SHEET A-602 FOR ROOM FINISH SCHEDULE.

KEYED NOTES:

1. 3"x4" PRE-FINISHED ALUMINUM DOWNSPOUTS.
2. 6"x6" ALUMINUM GUTTER.
3. PRE-FINISHED ALUMINUM PARAPET CAP.
4. FULLY ADHERED 60 MIL. EPDM ROOF
5. 12"x30" CONCRETE SPLASH BLOCK.
6. CONCRET STOOPS (SEE STRUCTURAL DRAWINGS FOR DETAILS)
7. 4" SPLIT FACE CMU EXTERIOR WALL. (SEE WALL SECTIONS FOR DETAILS)
8. 8" CMU INTERIOR WALL - PAINT. (SEE WALL SECTIONS FOR DETAILS)
9. 8" CMU INTERIOR WALL. CORES GROUTED SOLID FOR SOUND ATTENUATION - PAINT.
10. FANS, LOUVERS, HEAT PUMPS AND PIPING. (SEE MECHANICAL DRAWINGS FOR DETAILS)
11. RECESSED WALL HEATER (SEE MECHANICAL DRAWINGS FOR DETAILS)
12. ELECTRICAL PANELS, SWITCHES AND LIGHTING (SEE ELECTRICAL DRAWINGS FOR DETAILS)
13. SERVICE SINK (SEE MECHANICAL DRAWINGS FOR DETAILS)
14. PLASTIC LAMINATE CASEWORK AND COUNTERTOP.
15. BLOWER INTAKE AND EXHAUST PIPING. PROVIDE FLASHINGS, MINERAL WOOL INSULATION AND HIGH TEMPERATURE SILICONE SEALANT AROUND PIPES WITH HIGH TEMPERATURES. (SEE PROCESS DRAWINGS FOR EQUIPMENT DETAILS)
16. MASONRY EXPANSION JOINT BEHIND DOWNSPOUT.
17. MASONRY EXPANSION JOINT.
18. PAPER TOWEL DISPENSER AND WASTE RECEPTACLE.
19. BOLLARD (SEE CIVIL DRAWINGS FOR TYPICAL DETAIL)
20. 36" MINIMUM CLEARANCE BETWEEN SERVICE SINK AND EQUIPMENT PIPING.
21. PLUMBING VENT (SEE PLUMBING DRAWINGS FOR DETAILS)

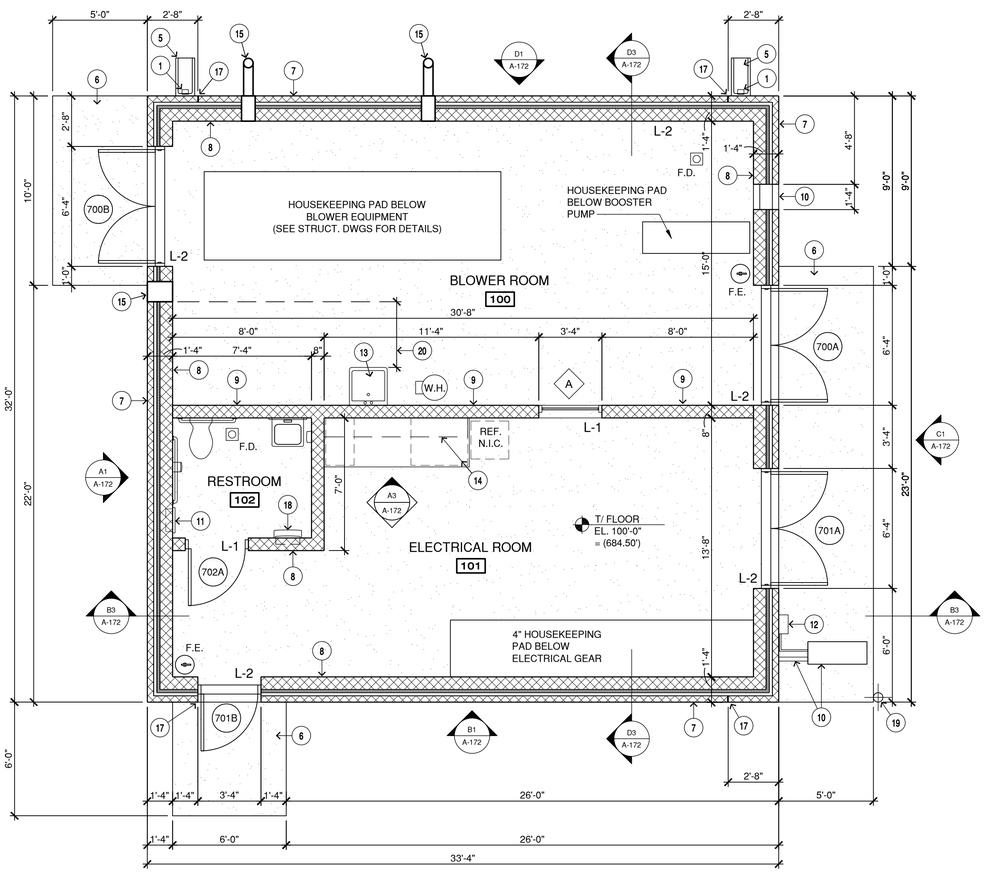

A1 FLOOR PLAN
1/4"=1'-0"

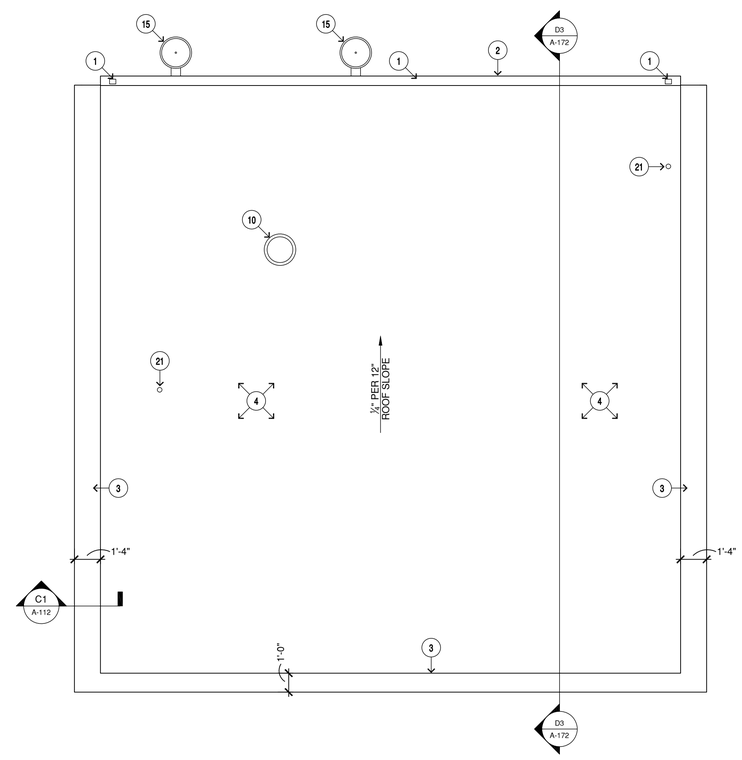

A3 ROOF PLAN
1/4"=1'-0"

CMT

License No. 184-000613

CONSULTANTS

MAY 2015

CSO SATELLITE TREATMENT FACILITY CONTRACT NO. 1

OWNER

MATTOON, ILLINOIS: *Working Together to Build the Future*

CITY OF MATTOON

MATTOON, ILLINOIS

MARK	DATE	DESCRIPTION

PROJECT NO:	12078-03-00
CAD DWG FILE:	120780300-A-171.DWG
DESIGNED BY:	GTC
DRAWN BY:	DJ
CHECKED BY:	GTC
APPROVED BY:	

COPYRIGHT: CRAWFORD, MURPHY & TILLY, INC. 2015

SHEET TITLE

BLOWER AND ELECTRICAL BUILDING PLANS

A-171

Path: J:\Mattoon\12078-03\Draw\Sheets\1-CSO Satellite Treatment\120780300-A-171.dwg
Date: Wednesday, June 17, 2015 11:55:31 AM

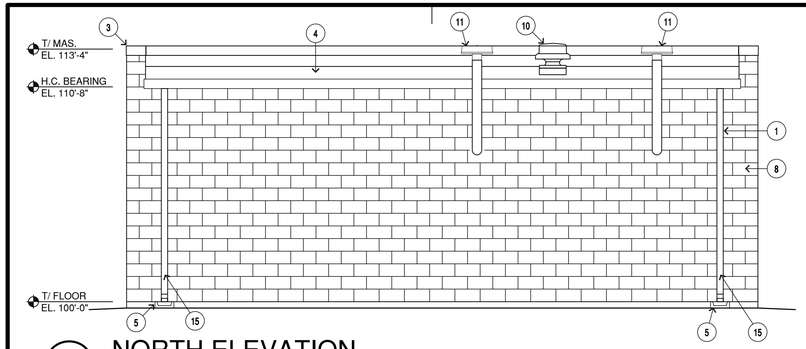

D1 NORTH ELEVATION

1/4"=1'-0"

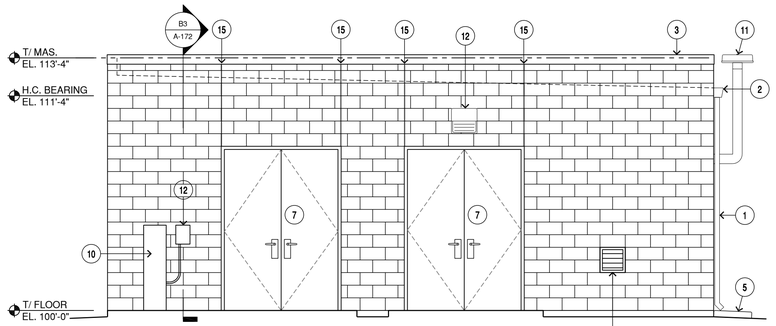

C1 EAST ELEVATION

1/4"=1'-0"

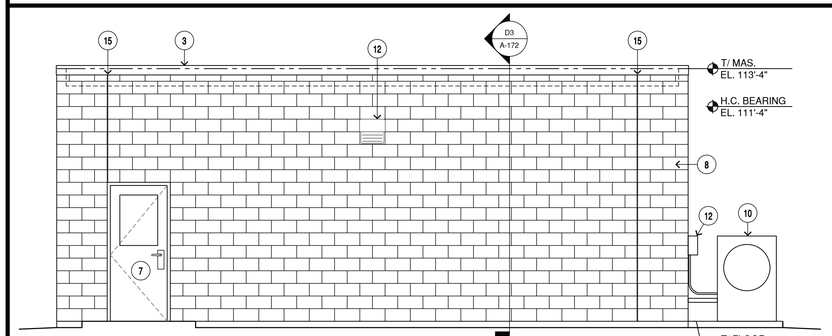

B1 SOUTH ELEVATION

1/4"=1'-0"

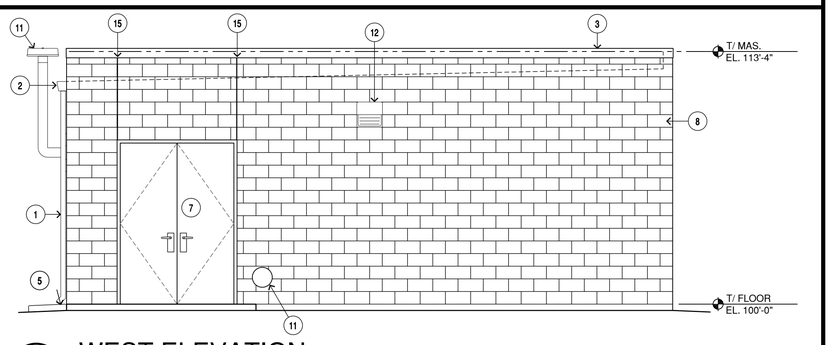

A1 WEST ELEVATION

1/4"=1'-0"

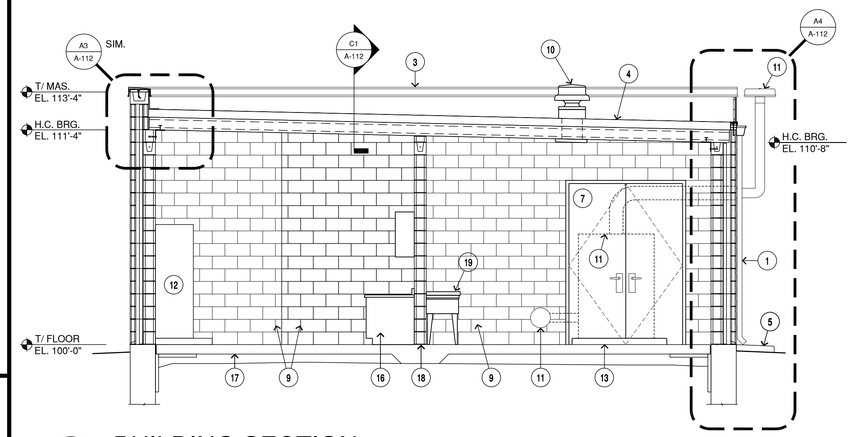

D3 BUILDING SECTION

1/4"=1'-0"

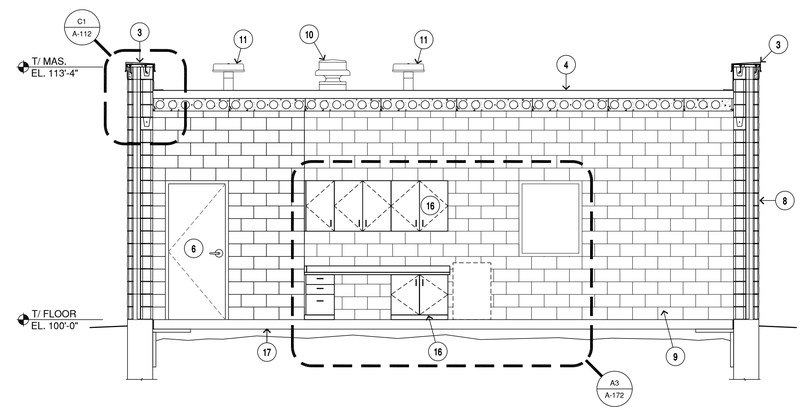

B3 BUILDING SECTION

1/4"=1'-0"

KEYED NOTES:

1. 3"x4" PRE-FINISHED ALUMINUM DOWNSPOUTS.
2. 6"x6" ALUMINUM GUTTER.
3. PRE-FINISHED ALUMINUM PARAPET CAP.
4. FULLY ADHERED 60 MIL. EPDM ROOF
5. 12"x30" CONCRETE SPLASH BLOCK.
6. HOLLOW METAL DOOR AND FRAME - PAINT. (SEE DOOR SCHEDULE)
7. ANODIZED ALUMINUM AND INSULATED ENTRY DOOR. (SEE DOOR SCHEDULE)
8. 4" SPLIT FACE CMU EXTERIOR WALL. (SEE WALL SECTIONS FOR DETAILS)
9. 8" CMU WALL. (SEE WALL SECTIONS FOR DETAILS)
10. FANS, LOUVERS AND HEAT PUMPS. (SEE MECHANICAL DRAWINGS FOR DETAILS)
11. BLOWER EQUIPMENT AND PIPING. PROVIDE FLASHINGS, MINERAL WOOL INSULATION AND HIGH TEMPERATURE SILICONE SEALANT AROUND PIPES WITH HIGH TEMPERATURES. (SEE PROCESS DRAWINGS FOR EQUIPMENT DETAILS)
12. ELECTRICAL PANELS, SWITCHES AND LIGHTING (SEE ELECTRICAL DRAWINGS FOR DETAILS)
13. HOUSEKEEPING PAD. (SEE STRUCTURAL DRAWINGS FOR DETAILS)
14. MASONRY EXPANSION JOINT BEHIND DOWNSPOUT.
15. MASONRY EXPANSION JOINT.
16. PLASTIC LAMINATE CASEWORK.
17. CONCRETE FLOOR SLAB OVER 6 MIL. VAPOR BARRIER.
18. 8" CMU INTERIOR WALL WITH MASONRY-CELL INSULATION - PAINT.
19. SERVICE SINK (SEE MECHANICAL DRAWINGS FOR DETAILS)

INTERIOR ELEVATION NOTES:

1. ALL WALL CABINETS TO HAVE A 12" MINIMUM INSIDE CLEAR DEPTH AND 2" EXTENSION ON DOORS.
2. ALL BACKSPLASHES ARE TO BE 4", EXCEPT WHERE NOTED. SEE INTERIOR ELEVATIONS
3. PROVIDE COUNTERTOP ACCESS HOLES WITH PLASTIC TRIM GROMMETS FOR ELECTRICAL AND OTHER CABLING. HOLES ARE TO BE FIELD LOCATED AND DRILLED. LOCATIONS TO BE DETERMINED BY OWNER PRIOR TO INSTALLATION.
4. JUNCTION BOXES THAT ARE ABOVE THE COUNTERTOP SHALL HAVE A MOUNTING HEIGHT OF 8" ABOVE THE COUNTERTOP UNLESS NOTED OTHERWISE.
5. CONTRACTOR TO FIELD VERIFY DIMENSIONS PRIOR TO THE FABRICATION OF CABINETRY.
6. ALL CABINETRY ABUTTING ADJACENT WALLS SHALL BE CONSTRUCTED WITH FACE EXTENSIONS THAT ALLOW FOR SCRIBING.
7. MANUFACTURER WILL PROVIDE FILLERS @ ALL INTERIOR CORNER BASE CABINETS FOR PROPER CLEARANCES BETWEEN DRAWER HARDWARE WHEN OPENING DRAWERS.
8. ALL FILE DRAWERS TO HAVE A MINIMUM OF 12" CLEAR WIDTH. ALL FILE AND DEEP DRAWERS TO HAVE FULL HEIGHT SIDES AND BACKS.
9. SEE ROOM FINISH SCHEDULE FOR INTERIOR WALL FINISHES.
10. SYMBOLS LEGEND:
    F - DESIGNATES HANGING FILE DRAWER WITH FULL EXTENSION HARDWARE.
    L - DESIGNATES CABINETS TO BE LOCKABLE. PROVIDE FULL EXTENSION HARDWARE FOR HANGING FILE DRAWERS.
    ▭ - LABEL HOLDER
    N.I.C. - NOT IN CONTRACT
11. FIELD LOCATE AND INSTALL (1) BLACK GROMMET FOR COUNTERTOP WIRE ACCESS.

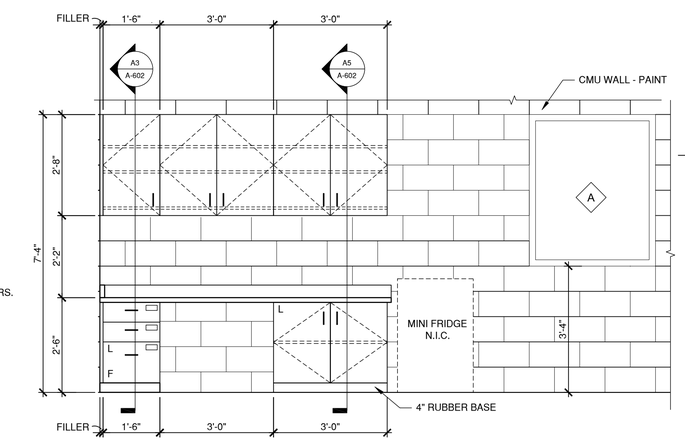

A3 ENLARGED ELEVATION

1/2"=1'-0"

CMT

License No. 184-000613

CONSULTANTS

MAY 2015

CSO SATELLITE TREATMENT FACILITY CONTRACT NO. 1

OWNER

MATTOON

MATTOON, ILLINOIS: *Working Together to Build the Future*

CITY OF MATTOON

MATTOON, ILLINOIS

MARK	DATE	DESCRIPTION

PROJECT NO:	12078-03-00
CAD DWG FILE:	120780300-A-172.DWG
DESIGNED BY:	GTC
DRAWN BY:	DJ
CHECKED BY:	GTC
APPROVED BY:	

COPYRIGHT: CRAWFORD, MURPHY & TILLY, INC. 2015

SHEET TITLE

BLOWER & ELECTRICAL BUILDING ELEVATIONS

A-172

SHEET 64 OF 128

Path: J:\Mattoon\12078-03\Draw\Sheets\1-CSO Satellite Treatment\120780300-A-172.dwg
Date: Wednesday, June 17, 2015 11:55:44 AM

SCREEN BUILDING DOOR SCHEDULE - BUILDING CODE 1

DOOR						FRAME		WALL CONST	LABEL	DETAILS (SEE SHEET A-601)			HARDWARE GROUP	LINTEL	REMARKS
NO.	SIZE	MAT'L	FINISH	CORE	TYPE	ELEV.	MAT'L			HEAD	JAMB	SILL			
100A	3'-0" x 7'-2" x 1 3/4"	ALUM	ANOD	INSUL	B	1	ALUM	CMU	--	A3	A3	A3	1	L-2	--
100B	12'-0" x 8'-0" x 1"	ALUM	ANOD	INSUL	C	--	ALUM	CMU	--	C4	C4	C4	--	L-3	--

CHEMICAL FEED BUILDING DOOR SCHEDULE - BUILDING CODE 6

DOOR						FRAME		WALL CONST	LABEL	DETAILS (SEE SHEET A-601)			HARDWARE GROUP	LINTEL	REMARKS
NO.	SIZE	MAT'L	FINISH	CORE	TYPE	ELEV.	MAT'L			HEAD	JAMB	SILL			
600A	(2) 5'-0" x 9'-10" x 1 3/4"	FRP	--	INSUL	A	4	FRP	CMU	--	A3	A3	A3	5	L-2	--
600B	3'-0" x 7'-2" x 1 3/4"	ALUM	ANOD	INSUL	B	1	ALUM	CMU	--	A3	A3	A3	2	L-2	--
601A	3'-0" x 7'-2" x 1 3/4"	ALUM	ANOD	INSUL	B	1	ALUM	CMU	--	A3	A3	A3	2	L-2	--
602A	(2) 3'-0" x 7'-2" x 1 3/4"	ALUM	ANOD	INSUL	A	2	ALUM	CMU	--	A3	A3	A3	6	L-2	--

BLOWER AND ELECTRICAL BUILDING DOOR SCHEDULE - BUILDING CODE 7

DOOR						FRAME		WALL CONST	LABEL	DETAILS (SEE SHEET A-601)			HARDWARE GROUP	LINTEL	REMARKS
NO.	SIZE	MAT'L	FINISH	CORE	TYPE	ELEV.	MAT'L			HEAD	JAMB	SILL			
700A	(2) 3'-0" x 8'-6" x 1 3/4"	ALUM	ANOD	INSUL	A	3	ALUM	CMU	--	A3	A3	A3	4	L-2	--
700B	(2) 3'-0" x 8'-6" x 1 3/4"	ALUM	ANOD	INSUL	A	3	ALUM	CMU	--	A3	A3	A3	4	L-2	--
701A	(2) 3'-0" x 8'-6" x 1 3/4"	ALUM	ANOD	INSUL	A	3	ALUM	CMU	--	A3	A3	A3	3	L-2	--
701B	3'-0" x 7'-2" x 1 3/4"	ALUM	ANOD	INSUL	B	1	ALUM	CMU	--	A3	A3	A3	2	L-2	--
702A	3'-0" x 7'-2" x 1 3/4"	FRP	--	--	A	1	FRP	CMU	--	A4	A4	A4	7	L-1	--

LINTEL SCHEDULE

NO.	SIZE	SHAPE	M.O.	BRG. LENGTH (EACH END)	REMARKS
L-1	8" CMU BOND BEAM W/ 2 #5 BARS		3'-4"	8"	
L-2	BENT PLATE 4" x 8" x ¼", 8" CMU BOND BEAM W/ 2 #5 BARS		3'-4" - 6'-4"	8"	3
L-3	BENT PLATE 4"x7 ½"x¼"; HSS 8 x 8 x ¼" WITH STUDS		12'-0"	1'-4"	1,2

LINTEL SCHEDULE

GENERAL NOTE:

1. ALL LINTELS TO BE HOT DIPPED GALVANIZED PER ASTM A123.

REMARKS:

1. WELD BACK TO BACK ANGLE AND HSS SECTION - 2" @ EACH END AND 2" @ 12" O.C. .
2. SEE STRUCTURAL DRAWINGS FOR ADDITIONAL DETAILS.
3. FOR MASONRY OPENINGS OVER 6'-0", BOND BEAMS SHALL BE GROUTED TWO COURSES DEEP.

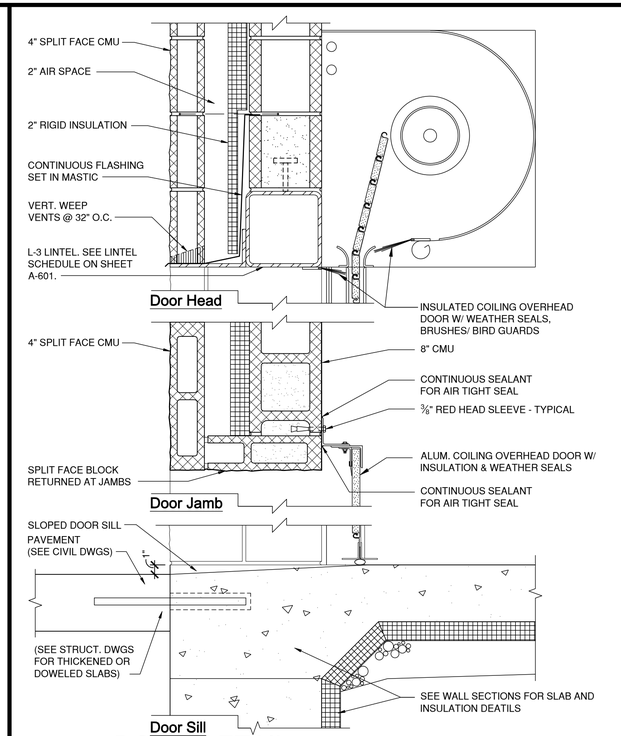

C4 DOOR DETAIL
1 1/2"=1'-0"

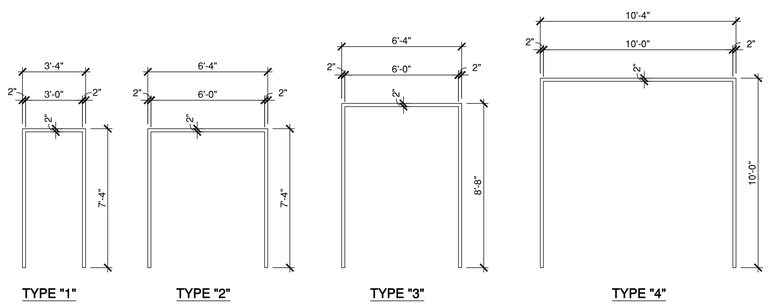

B1 DOOR FRAME ELEVATIONS
N.T.S.

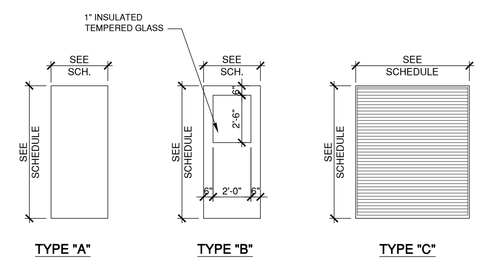

B3 DOOR TYPES
N.T.S.

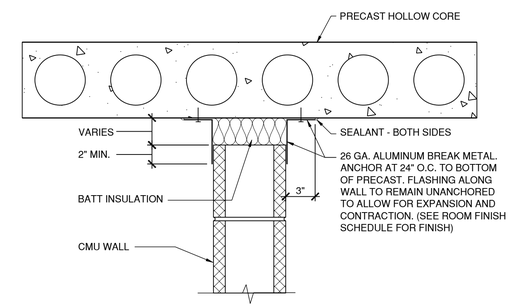

B4 WALL CLOSURE DETAIL
1 1/2" = 1'-0"

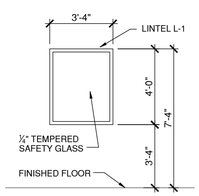

A1 WINDOW TYPES
1 1/2"=1'-0"

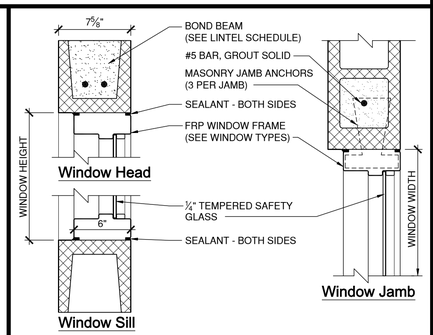

A2 WINDOW DETAILS
1 1/2"=1'-0"

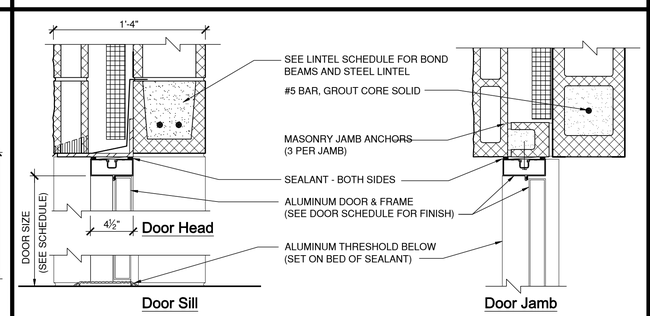

NOTE:

1. FOR DOORS THAT NEED A FULL 180° SWING, DOOR FRAME TO ALIGN WITH FACE OF WALL.

A3 DOOR DETAIL
1 1/2"=1'-0"

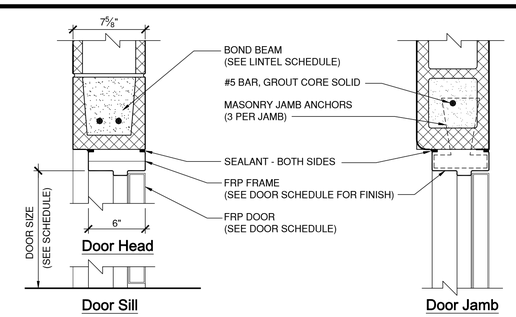

NOTE:

1. PROVIDE RUBBER DOOR MUTES (3 PER STRIKE JAMB)

A4 DOOR DETAIL
1 1/2"=1'-0"

CMT

License No. 184-000613

CONSULTANTS

MAY 2015

CSO SATELLITE TREATMENT FACILITY CONTRACT NO. 1

OWNER

MATTOON
MATTOON, ILLINOIS: *Working Together to Build the Future*

CITY OF MATTOON

MATTOON, ILLINOIS

MARK	DATE	DESCRIPTION

PROJECT NO:	12078-03-00
CAD DWG FILE:	120780300-A-601.DWG
DESIGNED BY:	GTC
DRAWN BY:	DJ
CHECKED BY:	GTC
APPROVED BY:	[illegible]

COPYRIGHT: CRAWFORD, MURPHY & TILLY, INC. 2015

SHEET TITLE

DOOR SCHEDULES & DETAILS

A-601

Path: J:\Mattoon\12078-03\Draw\Sheets\1-CSO Satellite Treatment\120780300-A-601.dwg
Date: Wednesday, June 17, 2015 11:55:54 AM

SCREEN BUILDING ROOM FINISH SCHEDULE - BUILDING CODE 1

NUMBER	ROOM NAME	WALLS								BASE		FLOOR		CEILING			REMARKS
		NORTH		SOUTH		EAST		WEST									
		MAT'L	FIN	MAT'L	FIN	MAT'L	FIN	MAT'L	FIN	MAT'L	FINISH	MAT'L	FINISH	MAT'L	FINISH	HEIGHT	
100	SCREEN ROOM	CMU	PNT	CMU	PNT	CMU	PAINT	CMU	PAINT	--	--	CONC	SEAL	HCS	PNT	±11'-0"	--

CHEMICAL FEED BUILDING ROOM FINISH SCHEDULE - BUILDING CODE 6

NUMBER	ROOM NAME	WALLS								BASE		FLOOR		CEILING			REMARKS
		NORTH		SOUTH		EAST		WEST									
		MAT'L	FIN	MAT'L	FIN	MAT'L	FIN	MAT'L	FIN	MAT'L	FINISH	MAT'L	FINISH	MAT'L	FINISH	HEIGHT	
100	CHLORINE TANK STORAGE	CMU	PNT	CMU	PNT	CMU	PNT	CMU	PNT	--	--	CONC	SEAL	HCS	PNT	±12'-0"	--
101	CHLORINE	CMU	PNT	CMU	PNT	CMU	PNT	CMU	PNT	--	--	CONC	SEAL	HCS	PNT	±12'-0"	--
102	BISULFITE FEED ROOM	CMU	PNT	CMU	PNT	CMU	PNT	CMU	PNT	--	--	CONC	SEAL	HCS	PNT	±12'-0"	--

BLOWER & ELECTRICAL BUILDING ROOM FINISH SCHEDULE - BUILDING CODE 7

NUMBER	ROOM NAME	WALLS								BASE		FLOOR		CEILING			REMARKS
		NORTH		SOUTH		EAST		WEST									
		MAT'L	FIN	MAT'L	FIN	MAT'L	FIN	MAT'L	FIN	MAT'L	FINISH	MAT'L	FINISH	MAT'L	FINISH	HEIGHT	
100	BLOWER ROOM	CMU	PNT	CMU	PNT	CMU	PNT	CMU	PNT	--	--	CONC	SEAL	HCS	PNT	±11'-0"	--
101	ELECTRICAL ROOM	CMU	PNT	CMU	PNT	CMU	PNT	CMU	PNT	--	--	CONC	SEAL	HCS	PNT	±11'-0"	--
102	RESTROOM	CMU	PNT	CMU	PNT	CMU	PNT	CMU	PNT	--	--	CONC	SEAL	HCS	PNT	±11'-0"	--

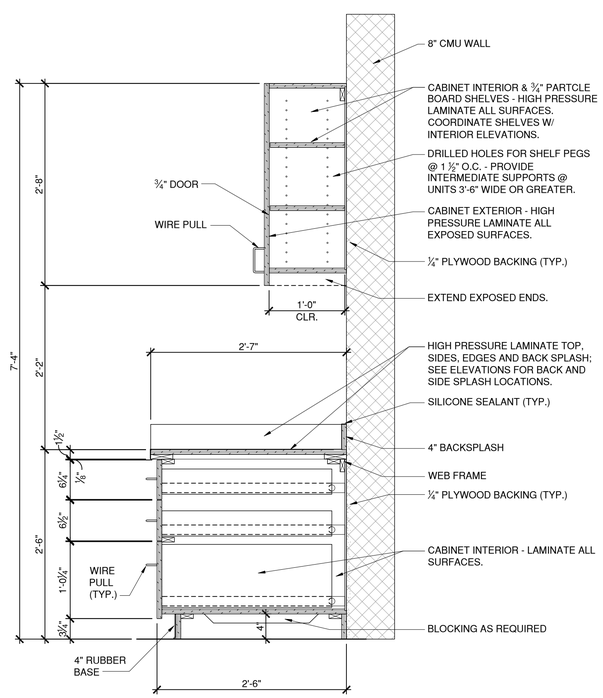

A3 CASEWORK DETAIL

1"=1'-0"

0 1/2' 1' 2'

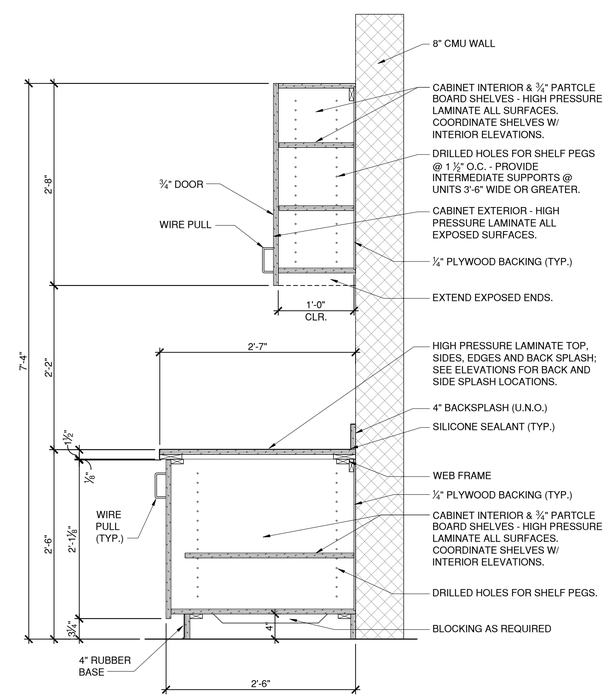

A5 CASEWORK DETAIL

1"=1'-0"

0 1/2' 1' 2'

CMT

License No. 184-000613

CONSULTANTS

MAY 2015

CSO SATELLITE TREATMENT FACILITY CONTRACT NO. 1

OWNER

MATTOON

MATTOON, ILLINOIS: *Working Together to Build the Future*

CITY OF MATTOON

MATTOON, ILLINOIS

MARK	DATE	DESCRIPTION

PROJECT NO:	12078-03-00
CAD DWG FILE:	120780300-A-602.DWG
DESIGNED BY:	GTC
DRAWN BY:	DJ
CHECKED BY:	GTC
APPROVED BY:	TEB

COPYRIGHT: CRAWFORD, MURPHY & TILLY, INC. 2015

SHEET TITLE

ROOM FINISH SCHEDULES & DETAILS

A-602

Path: J:\Mattoon\12078-03\Draw\Sheets\1-CSO Satellite Treatment\120780300-A-602.dwg
Date: Wednesday, June 17, 2015 11:56:03 AM

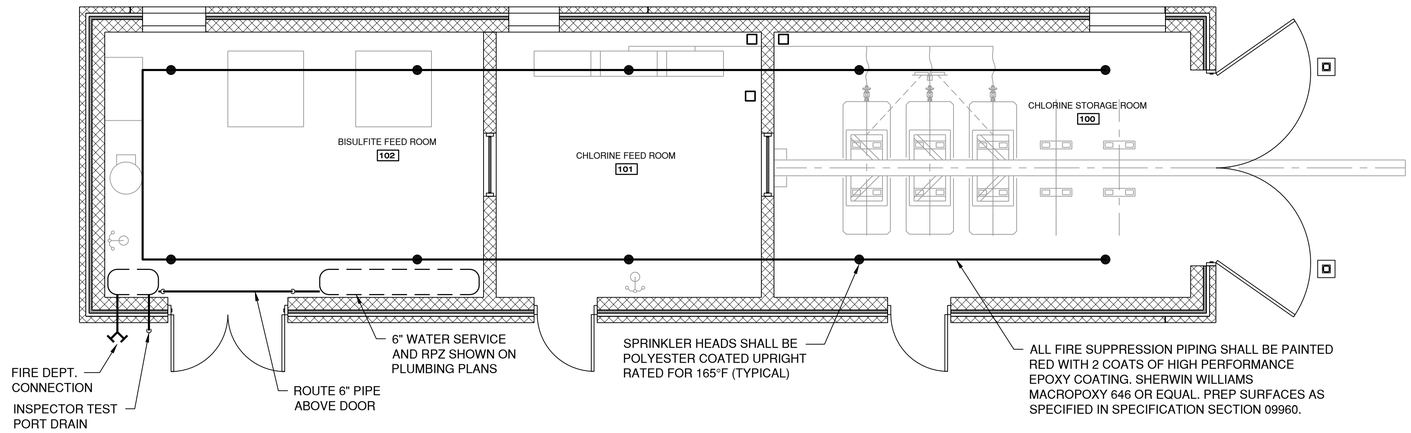

C1 CHEMICAL FEED BUILDING - PLAN VIEW

1/4"=1'-0"

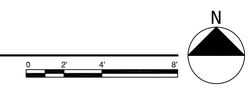

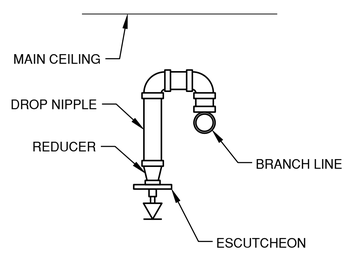

B1 RETURN BEND ARRANGEMENT

N.T.S.

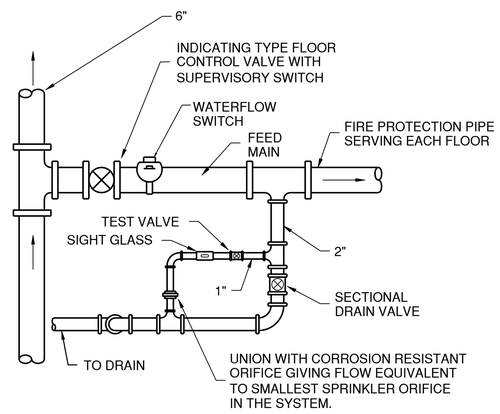

B2 FIRE CONTROL VALVE DETAIL

N.T.S.

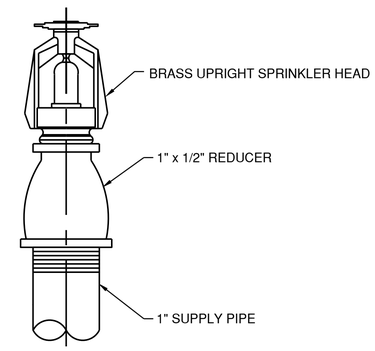

B3 UPRIGHT SPRINKLER HEAD DETAIL

N.T.S.

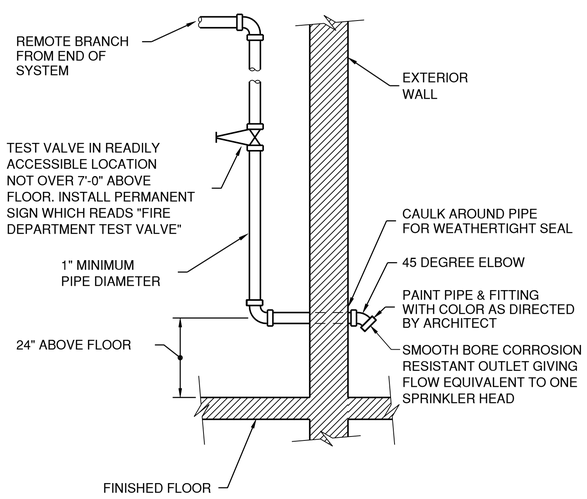

A1 INSPECTION TEST PIPE DETAIL

N.T.S.

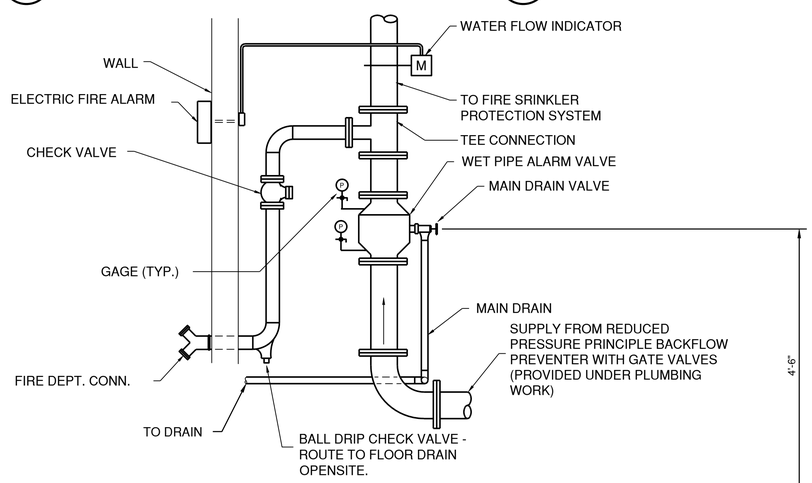

A2 WET PIPE SPRINKLER RISER DETAIL

N.T.S.

GENERAL NOTES

1. CONTRACTOR SHALL PROVIDE COMPLETE FIRE PROTECTION SYSTEM FOR AREA SHOWN INCLUDING:
   - A.) WET SPRINKLER SYSTEM DESIGN BASED ON SPECIFIED CRITERIA, NFPA 13 SPRINKLER CODE, LATEST EDITION.
   - B.) APPROVAL OF PLANS BY AUTHORITY HAVING JURISDICTION.
   - C.) INSTALLATION AND TESTING BY CONTRACTOR, FINAL APPROVAL BY AUTHORITY HAVING JURISDICTION
2. CONTRACTOR SHALL COORDINATE WORK WITH OTHER TRADES AND INSTALL ALL EQUIPMENT AND PIPING TO AVOID CONFLICT WITH ANY EQUIPMENT AND CONSTRUCTION.
3. PIPE HANGERS SHALL BE INSTALLED AS REQUIRED BY NFPA FOR SUPPORTING SPRINKLER PIPING. NO OTHER DEVICES OR PIPING ARE TO BE ATTACHED TO THE SPRINKLER PIPE HANGER SYSTEM UNLESS THE HANGER HAS BEEN DESIGNED FOR THE ADDITIONAL LOAD.
4. ALL PIPING SHALL BE SCHEDULE 40 STEEL WITH THREADED/SCREWED FITTINGS AND/OR GROOVED COUPLING, MECHANICAL TEE TYPE FITTINGS.
5. SYSTEMS SHALL BE DESIGNED USING HYDRAULIC CALCULATIONS BASED ON THE FOLLOWING DESIGN DATA:
   - A.) OCCUPANCY CLASSIFICATION - ORDINARY HAZARD GROUP 2
   - B.) DENSITY - 0.17 GPM/SF
   - C.) AREA OF OPERATION - 3000 SF
   - D.) AREA PER SPRINKLER HEAD - 130 SF
   - E.) MAXIMUM HEAD SPACING - 15 FT
6. ALL SUPERVISION, ALARMS, MONITORS, ETC., SHALL COMMUNICATE DIRECTLY WITH FIRE ALARM SYSTEM.
7. SYSTEM SHALL BE HYDROSTATICALLY TESTED AND WITNESSED BY THE PROJECT REPRESENTATIVE.
8. PIPE SIZES SHALL BE HYDROSTATICALLY CALCULATED BASED ON THE ACTUAL PIPING CONFIGURATION AND THE WATER FLOW INFORMATION OBTAINED FROM FLOW TESTS PERFORMED AT THIS SITE.
9. SPRINKLER HEADS SHALL BE 1/2" NPT AND RATED FOR 165°F.
10. PROVIDE ALL NEW SPRINKLER HEADS. SPRINKLER HEADS REMOVED FROM SERVICE SHALL NOT BE REUSED.
11. PROVIDE SUPERVISION ON ALL VALVES SERVING THE FIRE PROTECTION SYSTEM.

LEGEND

- SPRINKLER HEAD
- HORIZONTAL SPRINKLER HEAD
- INDICATING CONTROL VALVE
- WATER FLOW SWITCH
- FIRE DEPARTMENT CONNECTION
- SPRINKLER PIPE

CMT

License No. 184-000613

CONSULTANTS

MAY 2015

CSO SATELLITE TREATMENT FACILITY CONTRACT NO. 1

OWNER

MATTOON

MATTOON, ILLINOIS: *Working Together to Build the Future*

CITY OF MATTOON

MATTOON, ILLINOIS

MARK	DATE	DESCRIPTION

PROJECT NO:	12078-03-00
CAD DWG FILE:	120780300-FX-161.DWG
DESIGNED BY:	HEC
DRAWN BY:	DLB
CHECKED BY:	
APPROVED BY:	

COPYRIGHT: CRAWFORD, MURPHY & TILLY, INC. 2015

SHEET TITLE

CHEMICAL FEED BUILDING PLAN & DETAILS

FX-161

SHEET 67 OF 128

Path: J:\Mattoon\12078-03\Draw\Sheets\1-CSO Satellite Treatment\120780300-FX-161.dwg
Date: Wednesday, June 17, 2015 11:56:31 AM

SYMBOLS

	COLD WATER
	HOT WATER
	VENT
SAN	SANITARY ABOVE GRADE
SAN	SANITARY BELOW GRADE
W	WASTE
W	WASTE BELOW GRADE
G	GAS PIPING
G	GAS PIPING BELOW GRADE
A	AIR PIPING
V	VACUUM PIPING
	GATE VALVE
	BALL VALVE
	GLOBE VALVE
	PIPE SLEEVE
P	PRESSURE GAGE
	PRESSURE RELIEF VALVE
	UNION
	BACK FLOW PREVENTER
	THERMOSTATIC MIXING VALVE
"A"	SHOCK ABSORBER (LETTER INDICATES PDI CODE)
	INTERFACE BETWEEN NEW AND EXISTING WORK
FD	FLOOR DRAIN AND TRAP
C.O.	CLEAN OUT
	HOSE BIBB
	PRESSURE REDUCING VALVE
OW	OILY WASTE ABOVE GRADE
OW	OILY WASTE BELOW GRADE
AW	ACID WASTE ABOVE GRADE
AW	ACID WASTE BELOW GRADE
ET	EMERGENCY TEMPERED
T	TEMPERED
ST	STORM

ABBREVIATIONS

AFF	ABOVE FINISHED FLOOR
ALT	ALTERNATE
BTU	BRITISH THERMAL UNIT PER HOUR
CO	CLEAN OUT
CW	COLD WATER
DIA	DIAMETER
DF	DRINKING FOUNTAIN
DOM	DOMESTIC
DWH	DOMESTIC WATER HEATER
DW	DOUBLE WALLED
DN	DOWN
EL./ELEV.	ELEVATION
ET	EXPANSION TANK
EXG	EXISTING
EWC	ELECTRIC WATER COOLER
F	FAUCET
FD	FLOOR DRAIN
FLEX	FLEXIBLE
GA	GAGE OR GAUGE
GPM	GALLONS PER MINUTE
HB	HOSE BIBB
HW	HOT WATER
ID	INSIDE DIAMETER
INSUL.	INSULATION
LAV	LAVATORY
MS	MOP SINK
POC	POINT OF CONNECTION
SS	SERVICE SINK
TMV	THERMOSTATIC MIXING VALVE
UR	URINAL
VTRF	VENT THRU ROOF AND FLASH
VUP	VENT UP
WC	WATER CLOSET
WH	WATER HEATER
DWS	DOMESTIC WATER SUPPLY
TWS	TEMPERED WATER SUPPLY

GENERAL NOTES

1. WORK SHALL BE PERFORMED IN STRICT ACCORDANCE WITH THE LATEST CODES AND INDUSTRY STANDARDS, AS WELL AS THE LATEST OSHA, STATE OF ILLINOIS REQUIREMENTS, CITY OF MATTOON CODES AND CITY OF MATTOON, ILLINOIS REQUIREMENTS.
2. CONTRACTOR SHALL COORDINATE WORK WITH OTHER TRADES AND INSTALL ALL EQUIPMENT AND PIPING TO AVOID INTERFERENCE WITH STRUCTURAL MEMBERS AND EQUIPMENT.
3. DRAWINGS ARE TO BE USED IN CONJUNCTION WITH THE PROJECT SPECIFICATIONS AND OTHER RELATED DRAWINGS.
4. PIPING LAYOUT IS APPROXIMATE AND SHOULD BE COORDINATED TO AVOID FIELD INTERFERENCES.
5. PIPING SHALL BE INSTALLED IN A NEAT WORKMANLIKE MANNER, AND RUN PARALLEL OR PERPENDICULAR TO WALLS, CEILINGS, AND FLOORS.
6. REFER TO ALL OTHER DRAWINGS AND/OR CONSULT PROJECT REPRESENTATIVE PRIOR TO ROUGH-IN FOR PLUMBING WORK TO AVOID FIELD CONFLICTS.
7. MATERIALS AND EQUIPMENT USED ON THIS PROJECT SHALL BE NEW UNLESS OTHERWISE NOTED. NEW EQUIPMENT SHALL BE U.L. APPROVED AS APPLICABLE.
8. PLUMBING, ACCESSORIES AND MATERIALS SHALL BE INSTALLED IN ACCORDANCE WITH THE APPLICABLE SPECIFICATION SECTIONS AND MANUFACTURERS RECOMMENDATIONS.
9. FIRE STOP PIPE PENETRATIONS AT ALL FIRE RATED WALLS.
10. INSTALL HOT AND COLD WATER SUPPLY PIPING ABOVE THE LAY-IN CEILING AND DROP DOWN INSIDE WALLS (OR PIPING CHASE) TO FIXTURES UNLESS OUTHERWISE INDICATED.
11. INSTALLATION OF WATER SUPPLY PIPING AND VENT PIPING ABOVE LAY-IN CEILING SHALL BE COORDINATED WITH OTHER UTILITIES. ALL HOT AND COLD WATER PIPING, VALVES, AND ACCESORIES SHALL BE INSULATED IN ACCORDANCE WITH SECTION 15084.
12. ALL WASTE AND DRAIN PIPING SHALL BE INSTALLED A MINIMUM OF 12" BELOW THE BUILDING FLOOR SLAB (TO PIPE INVERT)
13. ALL PIPING SHALL BE SUPPORTED AS PER SPECIFICATIONS.
14. STOPS AND/OR SHUT-OFF VALVES SHALL BE PROVIDED AT EACH FIXTURE.
15. PIPING ROUGH-IN SHALL NOT COMMENCE UNTIL APPROVED EQUIPMENT SHOP DRAWINGS HAVE BEEN FURNISHED.
16. THE ARRANGEMENT AND LOCATION OF PIPING SHALL BE SUBSTANTIALLY AS ILLUSTRATED ON THE DRAWINGS. IN GENERAL PIPING SHALL BE INSTALLED RUNNING PARALLEL TO OR AT RIGHT ANGLES WITH BUILDING LINES.
17. PROVIDE ACCESS TO ALL VALVES.
18. CHANGES IN DIRECTION IN WASTE AND SANITARY PIPING SHALL BE MADE BY THE APPROPRIATE USE 45 DEGREE WYES, HALF-WYES OR LONG SWEEP QUARTER, SIXTH, EIGHTH, OR SIXTEENTH BENDS.
19. WHERE WASTE AND SANITARY PIPING INCREASES IN SIZE AT A JUNCTION, SUCH INCREASE SHALL BE MADE (IMMEDIATELY) PRIOR TO JUNCTION USING STANDARD INCREASERS OR REDUCERS.
20. PIPE SIZE SHOWN ARE MINIMUM SIZES.
21. WHERE VENT PIPES CONNECT TO A HORIZONTAL WASTE PIPE, THE VENT SHALL BE TAKEN OFF ABOVE THE CENTER LINE OF THE WASTE LINE AND SHALL RISE VERTICALLY, OR AT AN ANGLE NOT TO EXCEED 45 DEGREES FROM VERTICAL, BEFORE OFFSETTING HORIZONTALLY. SLOPE HORIZONTAL VENTS AT 1/8" PER FOOT TO DRAIN BACK
22. TOWARD WASTE/DRAIN PIPING. WASTE AND DRAIN PIPING 3" AND SMALLER SHALL BE SLOPED
23. AT 1/4" PER FOOT, MINIMUM. WASTE AND DRAIN PIPING 4" AND LARGER SHALL BE SLOPED AT 1/8" PER FOOT MINIMUM. COORDINATE ALL FLOOR DRAIN LOCATIONS AND BELOW GRADE PIPING
24. WITH STRUCTURAL WORK. AVOID CONFLICTS WITH STRUTCURAL FOOTINGS, EQUIPMENT BASES AND FOUNDATIONS.

CMT

License No. 184-000613

CONSULTANTS

MAY 2015

CSO SATELLITE TREATMENT FACILITY CONTRACT NO. 1

OWNER

MATTOON

MATTOON, ILLINOIS: *Working Together to Build the Future*

CITY OF MATTOON

MATTOON, ILLINOIS

MARK	DATE	DESCRIPTION

PROJECT NO:	12078-03-00
CAD DWG FILE:	120780300-P-001.DWG
DESIGNED BY:	HEC
DRAWN BY:	DLB
CHECKED BY:	HEC
APPROVED BY:	TKB

COPYRIGHT: CRAWFORD, MURPHY & TILLY, INC. 2015

SHEET TITLE

PLUMBING ABBREVATIONS, LEGEND AND NOTES

P-001

Path: J:\Mattoon\12078-03\Draw\Sheets\1-CSO Satellite Treatment\120780300-P-001.dwg
Date: Wednesday, June 17, 2015 11:57:14 AM

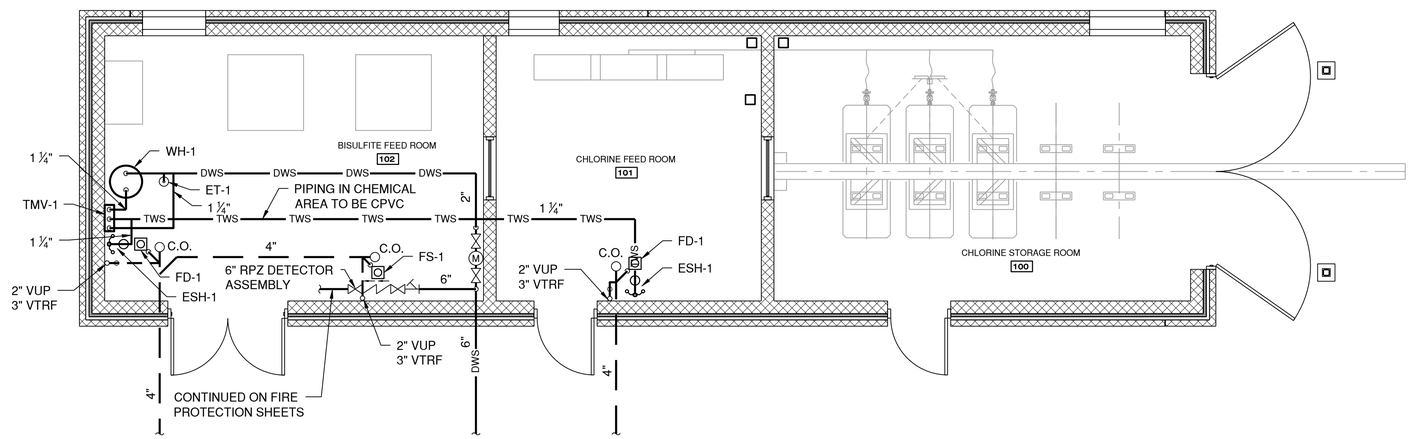

C1 CHEMICAL FEED BUILDING - PLAN VIEW

1/4"=1'-0"

N

0 2' 4' 8'

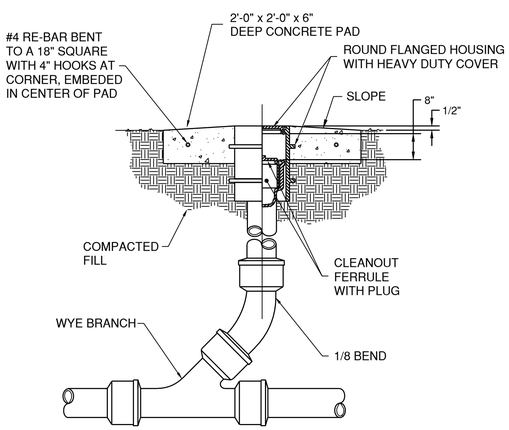

A1 EXTERIOR CLEANOUT

N.T.S.

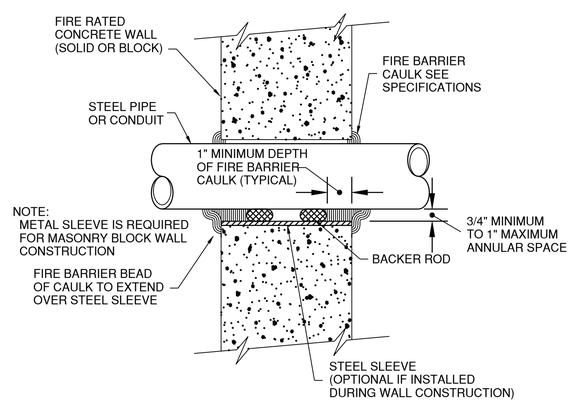

A3 PENETRATION DETAIL

N.T.S.

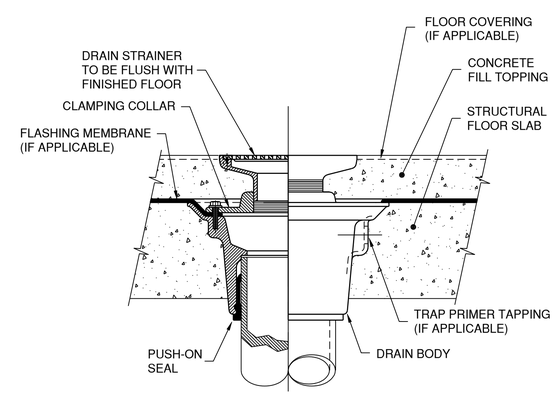

A4 FLOOR DRAIN

N.T.S.

CMT

License No. 184-000613

CONSULTANTS

MAY 2015

CSO SATELLITE
TREATMENT FACILITY
CONTRACT NO. 1

OWNER

MATTOON
MATTOON, ILLINOIS: *Working Together to Build the Future*

CITY OF MATTOON

MATTOON, ILLINOIS

MARK	DATE	DESCRIPTION

PROJECT NO:	12078-03-00
CAD DWG FILE:	120780300-P-161.DWG
DESIGNED BY:	HEC
DRAWN BY:	DLB
CHECKED BY:	
APPROVED BY:	

COPYRIGHT: CRAWFORD, MURPHY & TILLY, INC. 2015

SHEET TITLE

CHEMICAL FEED
BUILDING PLAN &
DETAILS

P-161

SHEET 69 OF 128

Path: J:\Mattoon\12078-03\Draw\Sheets\1-CSO Satellite Treatment\120780300-P-161.dwg
Date: Wednesday, June 17, 2015 11:57:28 AM

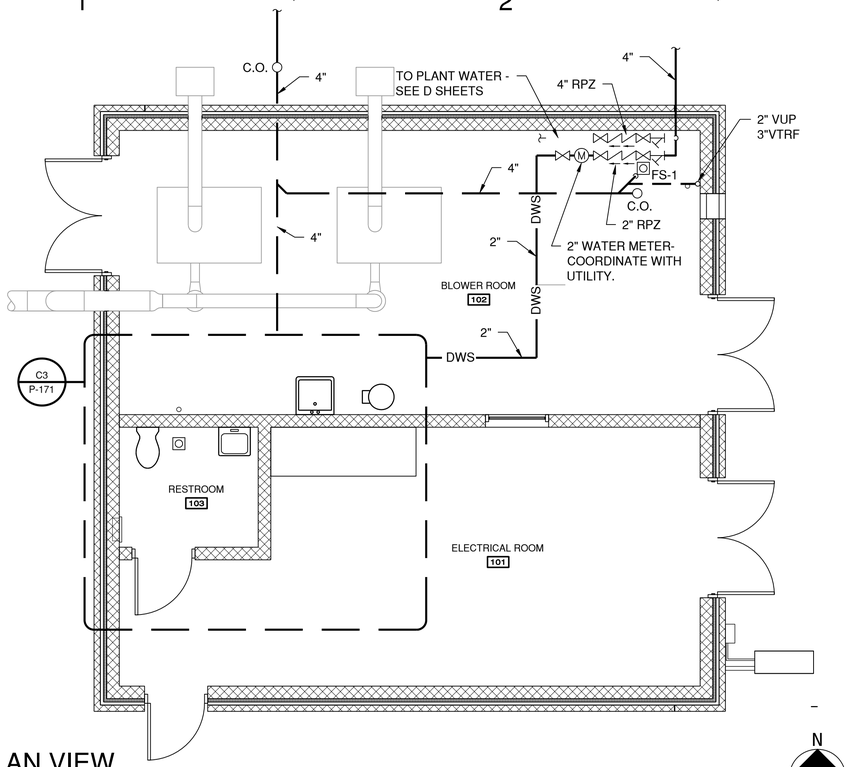

C1 PLAN VIEW
1/4"=1'-0"

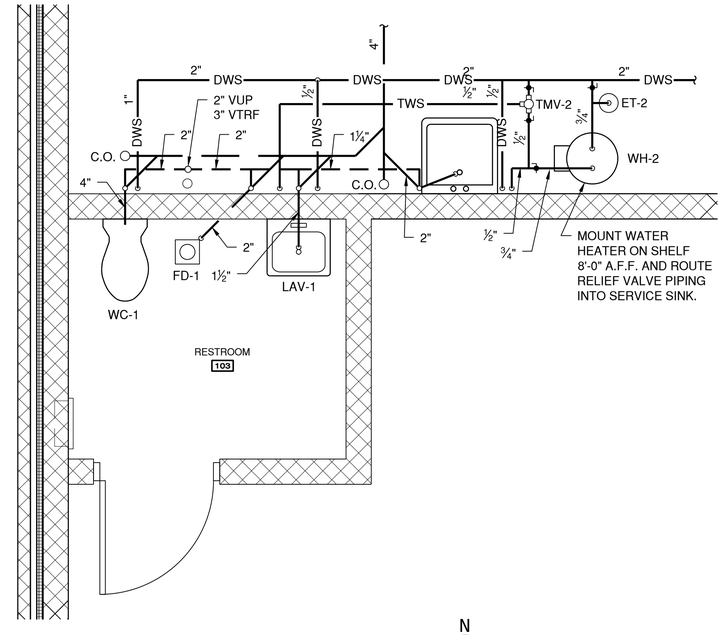

C3 ENLARGED PLAN VIEW
1/2"=1'-0"

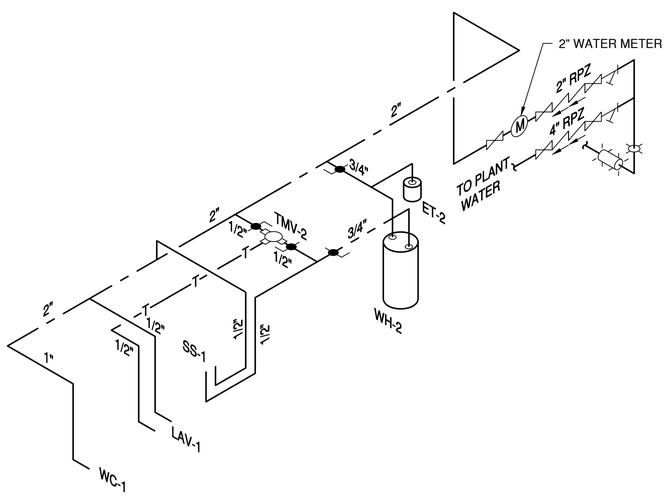

A1 SUPPLY ISOMETRIC
N.T.S.

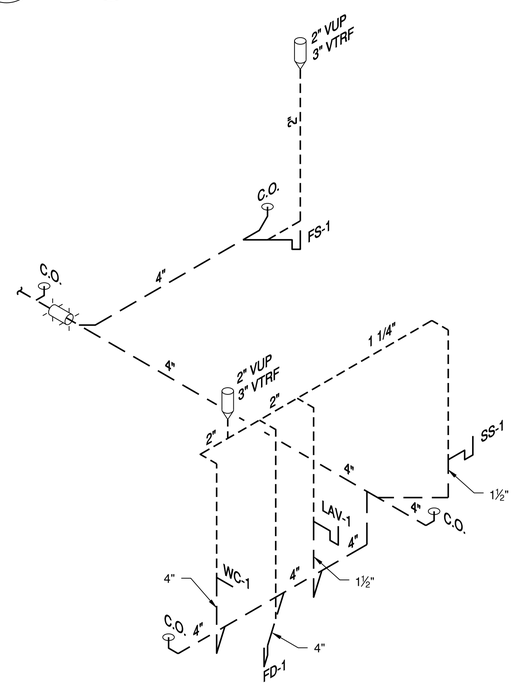

A3 WASTE ISOMETRIC
N.T.S.

CMT

License No. 184-000613

CONSULTANTS

MAY 2015

CSO SATELLITE TREATMENT FACILITY CONTRACT NO. 1

OWNER

MATTOON

MATTOON, ILLINOIS: *Working Together to Build the Future*

CITY OF MATTOON

MATTOON, ILLINOIS

MARK	DATE	DESCRIPTION

PROJECT NO:	12078-03-00
CAD DWG FILE:	120780300-P-171.DWG
DESIGNED BY:	HEC
DRAWN BY:	DLB
CHECKED BY:	
APPROVED BY:	

COPYRIGHT: CRAWFORD, MURPHY & TILLY, INC. 2015

SHEET TITLE

BLOWER AND ELECTRICAL BUILDING PLANS & DETAILS

P-171

SHEET 70 OF 128

Path: J:\Mattoon\12078-03\Draw\Sheets\1-CSO Satellite Treatment\120780300-P-171.dwg
Date: Wednesday, June 17, 2015 11:57:43 AM

INSTRUMENT SYMBOL IDENTIFIERS

J-3 J-4, J-5 J-1 J-2 J-6

J-1: IDENTIFICATION LETTERS (SEE TABLE BELOW)
J-2: LOOP NUMBER
J-3: VENDOR DESIGNATION (SEE NOTE 3)
J-4: FUNCTION BLOCK (SEE TABLE BELOW)
J-5: PANEL NUMBER
J-6: HANDSWITCH DESIGNATOR (SEE TABLE BELOW)

	FIRST LETTER		SUCEEDING LETTERS		
	MEASURED OR INTIATING VARIABLE	MODIFIER	READOUT OR PASSIVE FUNCTION	OUTPUT FUNCTION	MODIFIER
A	ANALYSIS		ALARM		
B	BURNER, COMBUSTION		USER'S CHOICE	USER'S CHOICE	USER'S CHOICE
C	USER'S CHOICE			CONTROL	CLOSED
D	DENSITY	DIFFERENTIAL	DAMPER		
E	VOLTAGE		SENSOR (PRIMARY ELEMENT)		
F	FLOW RATE	RATIO (FRACTION)			
G	USER'S CHOICE		GLASS, VIEWING DEVICE		
H	HAND				HIGH
I	CURRENT (ELECTRIC)		INDICATE		
J	POWER	SCAN			
K	TIME, TIME SCHEDULE	TIME RATE OF CHANGE		CONTROL STATION	
L	LEVEL		LIGHT		LOW
M	MOISTURE	MOMENTARY			MIDDLE, INTERMEDIATE
N	USER'S CHOICE		USER'S CHOICE	USER'S CHOICE	USER'S CHOICE
O	USER'S CHOICE		ORFICE, RESTRICTION		OPEN
P	PRESSURE, VACUUM		POINT (TEST) CONNECTION		
Q	QUANTITY	INTEGRATE, TOTALIZE			
R	RADIATION		RECORD		
S	SPEED, FREQUENCY	SAFETY	SWITCH		
T	TEMPERTURE			TANSMIT	
U	MULTI VARIABLE		MULTIFUNCTION	MULTIFUNCTION	MULTIFUNCTION
V	VIBRATION, MECHANICAL ANALYSIS			VALVE, DAMPER OR LOUVER	
W	WEIGHT, FORCE		WELL		
X	UNCLASSIFIED	X AXIS	UNCLASSIFIED	UNCLASSIFIED	UNCLASSIFIED
Y	EVENT, STATE, PRESENCE	Y AXIS		RELAY, COMPUTE, CONVERT	
Z	POSITION, DIMENSION	Z AXIS		DRIVER, ACUATOR, UNCLASSIFIED FINAL CONTROL ELEMENT	

GENERAL INSTRUMENT OR FUNCTION SYMBOLS	FIELD MOUNTED	PRIMARY LOCATION ACCESSIBLE TO OPERATOR	AUXILIARY LOCATION ACCESSIBLE TO OPERATOR	NORMALLY INACCESSIBLE OR BEHIND PANEL
DISCRETE INSTRUMENTS				
SHARED DISPLAY, SHARED CONTROL				
COMPUTER FUNCTION				
PROGRAMMABLE LOGIC CONTROL				

(J-4) FUNCTION BLOCK DESIGNATORS

- Σ SUMMING
- Δ DIFFERENCE
- ∫ INTEGRAL
- d/dt DERIVATIVE
- X MULTIPLING
- ÷ DIVIDING
- */* CONVERT:
- ∛ ROOT EXTRACTION
- √ SQUARE ROOT
- x^n EXPONENTIAL
- > HIGH SELECTING
- < LOW SELECTING
- ± BIAS
- F(X) NONLINEAR OR UNSPECIFIED FUNCTION

*
E - VOLTAGE
I - CURRENT
P - PNEUMATIC
A - ANALOG

B - BINARY
H - HYDRAULIC
O - ELECTROMAGNETIC, SONIC
R - RESISTANCE (ELECT)
D - DIGITAL

(J-6) HAND SWITCH DESIGNATORS

HOA	HAND-OFF-AUTO	LR	LOCAL-REMOTE
HOR	HAND-OFF-REMOTE	OC	OPEN-CLOSE
F-R	FOWARD-REVERSE	OCA	OPEN-CLOSE-AUTO
1-0	ON-OFF		

PIPING ABBREVIATIONS

INF	INFLUENT
PW	PLANT WATER
WW	WASTE WATER
AIR	AIR
DR	DRAIN
EFL	EFFLUENT
DIP	DUCTILE IRON PIPE
GFRP	GLASS FIBER REINFORCED PIPE
SS	STAINLESS STEEL
CL	CHLORINE

FLOW PRIMARY ELEMENTS

- ORIFACE PLATE
- SINGLE PORT PITOT TUBE OR PITOT-VENTURI TUBE
- VENTURI TUBE
- AVERAGING PITOT TUBE
- FLUME
- WEIR
- TURBINE OR PROPELLER-TYPE PRIMARY ELEMENT
- ROTAMETER
- ROTAMETER WITH INTEGRAL VALVE
- THERMAL MASS FLOWMETER
- POSITIVE DISPLACEMENT TYPE FLOW TOTALIZING INDICATOR
- VORTEX SENSOR
- TARGET TYPE SENSOR
- FLOW NOZZLE
- M MAGNETIC FLOWMETER
- SONIC FLOWMETER

LINES

- MAIN PROCESS
- SECONDARY PROCESS
- PIPE SYSTEM
- DRAWING REFERENCE
- PS X DI-XXX OD — REFERENCE TO OTHER SHEETS
- LINE CONNECTION
- ORIGIN OR DESTINATION
- XX-XX-XX — PIPE SYSTEM, PIPE TYPE, PIPE SIZE
- PNEUMATIC
- ELECTRICAL
- HYDRAULIC
- CAPILLARY TUBE
- SOFTWARE OR DATA LINK
- ELECTRO MAGNETIC OR SONIC (GUIDED)

MECHANICAL — ELECTRICAL

OR — CONNECTED

NOT CONNECTED

VALVES

- GATE VALVE
- GLOBE VALVE
- PLUG VALVE
- CHECK VALVE
- PINCH VALVE
- DIAPHRAGM VALVE
- BUTTERFLY VALVE
- BALL VALVE
- NEEDLE VALVE
- PLUG (COCK)
- PRESSURE REDUCING REGULATING VALVE, SELF-CONTAINED
- BACK PRESSURE REGULATING VALVE, SELF-CONTAINED
- PRESSURE REDUCING REGULATOR WITH EXTERNAL PRESSURE TAP
- 3-WAY VALVE
- 4-WAY VALVE
- ANGLE VALVE
- * = FC - FAILED CLOSED FO - FAILED OPENED; LC - LOCKED CLOSED LO - LOCKED OPENED
- CLOSED DURING NORMAL OPERATION
- SHADING INDICATES PORT TO BE CLOSED DURING NORMAL OPERATION. DOT INDICATES PORT TO BE CLOSED DURING ALTERNATE OPERATION.
- REDUCED PRESURE ZONE DEVICE
- AIR/VACUUM RELIEF
- PRESSURE RELIEF

VALVE OPERATORS

- DIAPHRAGM
- DIAPHRAGM PRESSURE BALANCED
- HAND
- M MOTOR
- CYLINDER
- S SOLENOID
- SV SOLENOID VALVE

TYPICAL CONNECTIONS

- DIRECT CONNECTION TO PROCESS
- TEMPERATURE ELEMENT WITH WELL
- IN-LINE DEVICE
- RADIATION OR SONIC SENSING
- FILLED SYSTEM, DIAPHRAGM SEAL CONNECTION

EQUIPMENT

- PUMP
- SUBMERSIBLE PUMP
- BLOWER
- CHEMICAL PUMP
- INJECTOR
- SCREEN
- M MIXER
- FAN
- BUBBLER DIFFUSION AERATOR

MISCELLANEOUS

- FLANGE
- UNION
- Y STRAINER
- FLOW STRAIGHTENING VANE
- TEE
- SCREWED CAP
- WELDED CAP
- BLIND FLANGE
- OR REDUCER
- HOSE BIBB
- DIAPHRAGM SEAL
- RUPTURE DISK, PRESSURE
- RUPTURE DISK, VACUUM
- P PURGE
- DRAIN
- THERMOMETER WELL
- I INTERLOCK
- EXPANSION JOINT
- FLEXIBLE COUPLING
- SLUICE GATE OR SLIDE GATE
- * = AV - AIR VALVE; F - FILTER; T - TRAP; FH - FIRE HYDRANT
- WATER LEVEL

ALARM TYPE

YA1 - WARNING	YL1 - RUN
YA2 - FAIL	YL2 - STOP
YA3 - OVERLOAD	YL3 - ESTOP
YA4 - HOUSING LEAK	YL4 - FORWARD
YA5 - OVER-TEMPERATURE	YL5 - REVERSE
YA6 - GROUND FAULT	YL6 - WASHWATER
YA7 - VIBRATION	YL7 - FAIL
YA8 - HIGH WATER LEVEL	YL8 - OVER-TEMPERATURE

NOTES

1. THIS IS A GENERALIZED LEGEND SHEET. THIS CONTRACT MAY NOT USE ALL INFORMATION SHOWN.
2. INFORMATION SHOWN MAY NOT BE ALL INCLUSIVE. SEE ALSO ISA S5.1, S5.3 AND S7.3
3. INSTRUMENTS MARKED WITH AN ASTERISK ARE FURNISHED WITH EQUIPMENT.
4. REFER TO ISA RP7.7 FOR INSTRUMENT AIR QUALITY STANDARDS.

CMT

License No. 184-000613

CONSULTANTS

MAY 2015

CSO SATELLITE TREATMENT FACILITY CONTRACT NO. 1

OWNER

MATTOON
MATTOON, ILLINOIS: *Working Together to Build the Future*

CITY OF MATTOON

MATTOON, ILLINOIS

MARK	DATE	DESCRIPTION

PROJECT NO:	12078-03-00
CAD DWG FILE:	120780300-DI-001.DWG
DESIGNED BY:	LDW
DRAWN BY:	DLB
CHECKED BY:	SJB
APPROVED BY:	
COPYRIGHT:	CRAWFORD, MURPHY & TILLY, INC. 2015

SHEET TITLE

PID - LEGEND AND GENERAL NOTES

DI-001

SHEET 71 OF 128

Path: J:\Mattoon\12078-03\Draw\Sheets\1-CSO Satellite Treatment\120780300-DI-001.dwg
Date: Wednesday, June 17, 2015 12:11:32 PM

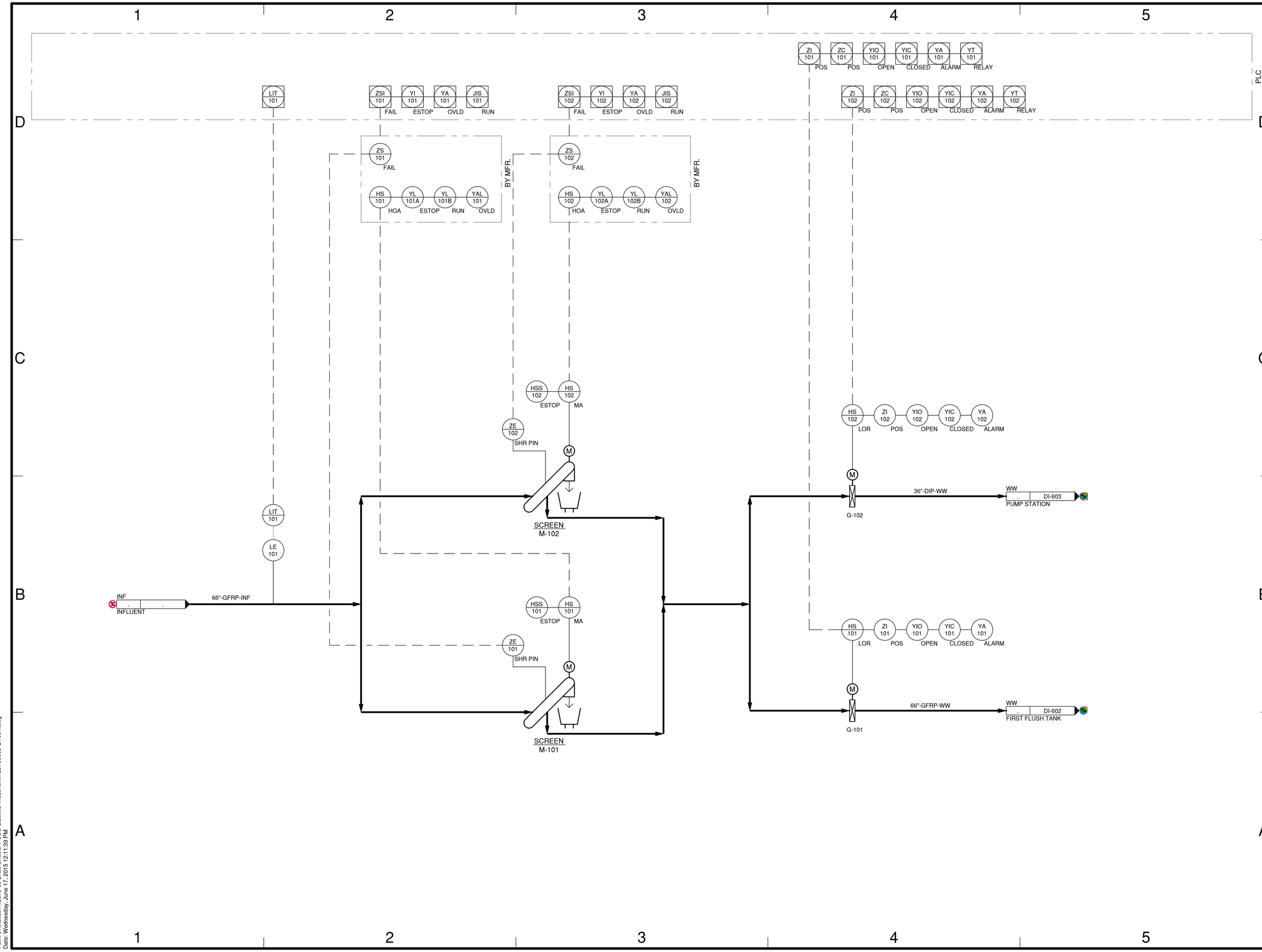

CMT

License No. 184-000613

CONSULTANTS

MAY 2015

CSO SATELLITE
TREATMENT FACILITY
CONTRACT NO. 1

OWNER

MATTOON

MATTOON, ILLINOIS: *Working Together to Build the Future*

CITY OF MATTOON

MATTOON, ILLINOIS

MARK	DATE	DESCRIPTION

PROJECT NO:	12078-03-00
CAD DWG FILE:	120780300-DI-601.DWG
DESIGNED BY:	LDW
DRAWN BY:	DLB
CHECKED BY:	SJB
APPROVED BY:	

COPYRIGHT: CRAWFORD, MURPHY & TILLY, INC. 2015

SHEET TITLE

PID - SCREENINGS

DI-601

SHEET 72 OF 128

Path: J:\Mattoon\12078-03\Draw\Sheets\1-CSO Satellite Treatment\120780300-DI-601.dwg
Date: Wednesday, June 17, 2015 12:11:39 PM

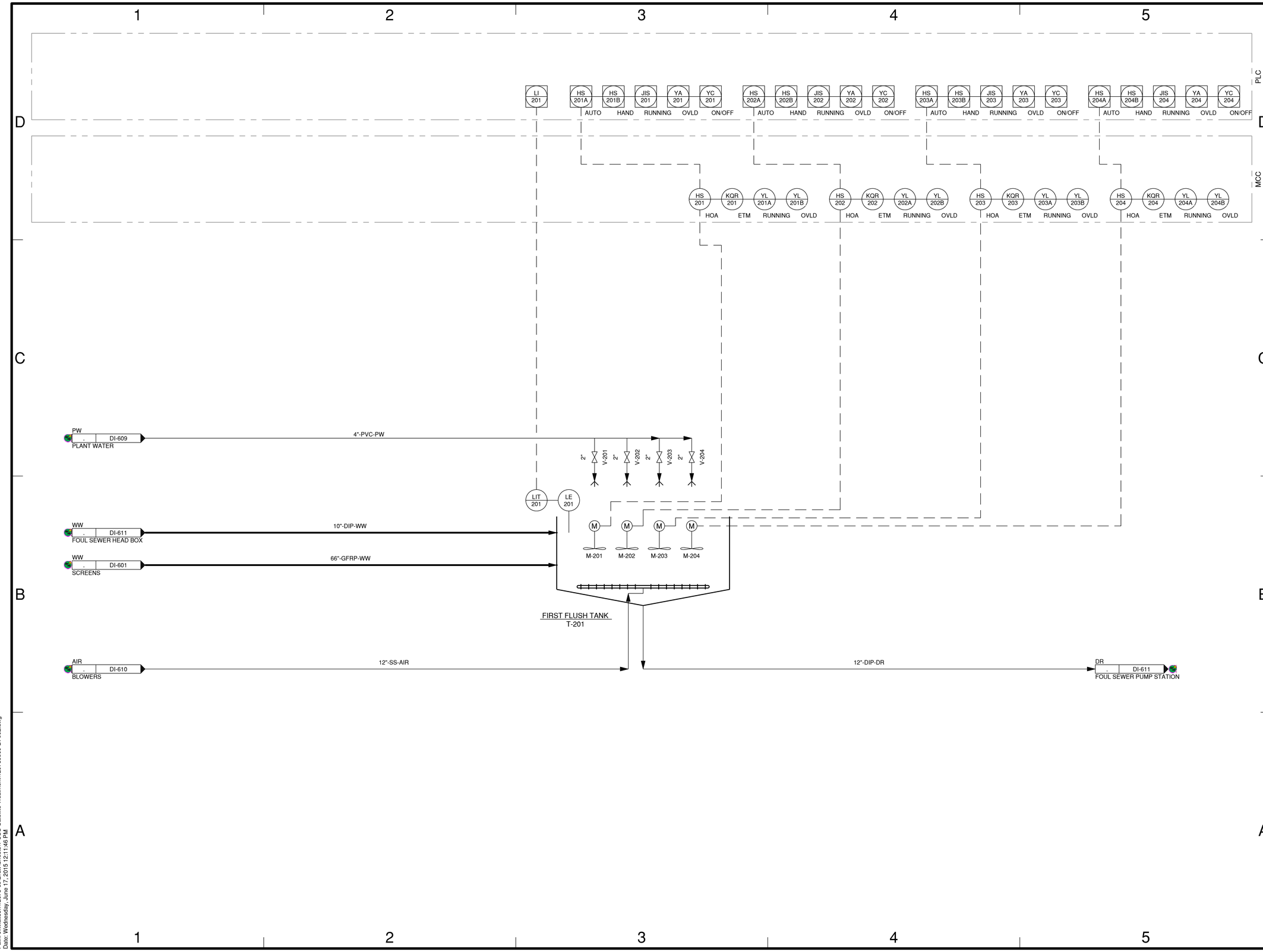

CMT

License No. 184-000613

CONSULTANTS

MAY 2015

CSO SATELLITE TREATMENT FACILITY CONTRACT NO. 1

OWNER

MATTOON

MATTOON, ILLINOIS: *Working Together to Build the Future*

CITY OF MATTOON

MATTOON, ILLINOIS

MARK	DATE	DESCRIPTION

PROJECT NO:	12078-03-00
CAD DWG FILE:	120780300-DI-602.DWG
DESIGNED BY:	LDW
DRAWN BY:	DLB
CHECKED BY:	SJB
APPROVED BY:	

COPYRIGHT: CRAWFORD, MURPHY & TILLY, INC. 2015

SHEET TITLE

PID - FIRST FLUSH TANK

DI-602

SHEET 73 OF 128

Path: J:\Mattoon\12078-03\Draw\Sheets\1-CSO Satellite Treatment\120780300-DI-602.dwg
Date: Wednesday, June 17, 2015 12:11:46 PM

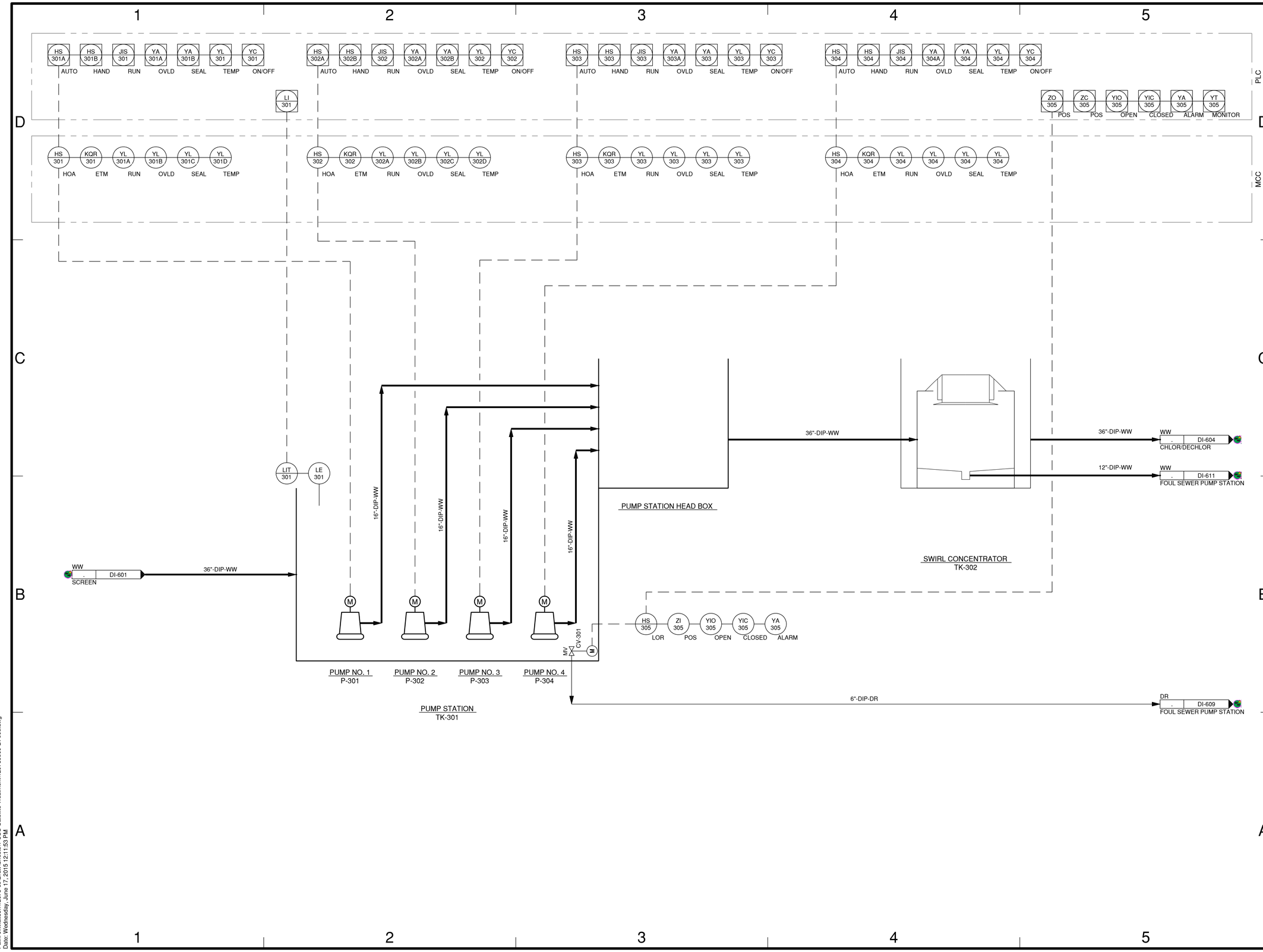

CMT

License No. 184-000613

CONSULTANTS

MAY 2015

CSO SATELLITE TREATMENT FACILITY CONTRACT NO. 1

OWNER

MATTOON

MATTOON, ILLINOIS: *Working Together to Build the Future*

CITY OF MATTOON

MATTOON, ILLINOIS

MARK	DATE	DESCRIPTION

PROJECT NO:	12078-03-00
CAD DWG FILE:	120780300-DI-603.DWG
DESIGNED BY:	LDW
DRAWN BY:	DLB
CHECKED BY:	SJB
APPROVED BY:	

COPYRIGHT: CRAWFORD, MURPHY & TILLY, INC. 2015

SHEET TITLE

PID- INFLUENT PUMP STATION AND SWIRL CONCENTRATOR

DI-603

SHEET 74 OF 128

Path: J:\Mattoon\12078-03\Draw\Sheets\1-CSO Satellite Treatment\120780300-DI-603.dwg
Date: Wednesday, June 17, 2015 12:11:53 PM

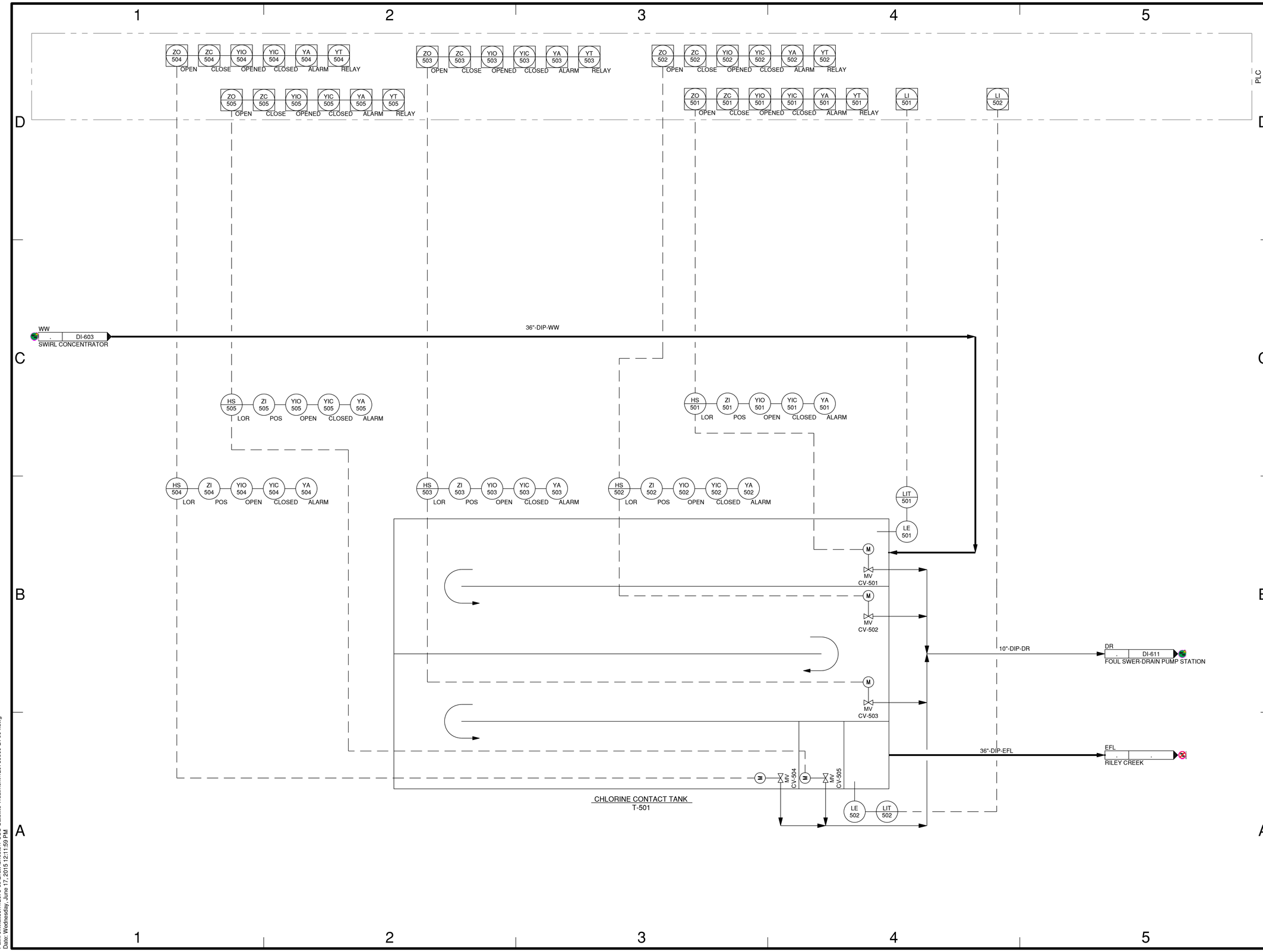

CMT

License No. 184-000613

CONSULTANTS

MAY 2015

CSO SATELLITE
TREATMENT FACILITY
CONTRACT NO. 1

OWNER

MATTOON

MATTOON, ILLINOIS: *Working Together to Build the Future*

CITY OF MATTOON

MATTOON, ILLINOIS

MARK	DATE	DESCRIPTION

PROJECT NO:	12078-03-00
CAD DWG FILE:	120780300-DI-604.DWG
DESIGNED BY:	LDW
DRAWN BY:	DLB
CHECKED BY:	SJB
APPROVED BY:	

COPYRIGHT: CRAWFORD, MURPHY & TILLY, INC. 2015

SHEET TITLE

PID - CHLORINE CONTACT TANK

DI-604

SHEET 75 OF 128

Path: J:\Mattoon\12078-03\Draw\Sheets\1-CSO Satellite Treatment\120780300-DI-604.dwg
Date: Wednesday, June 17, 2015 12:11:59 PM

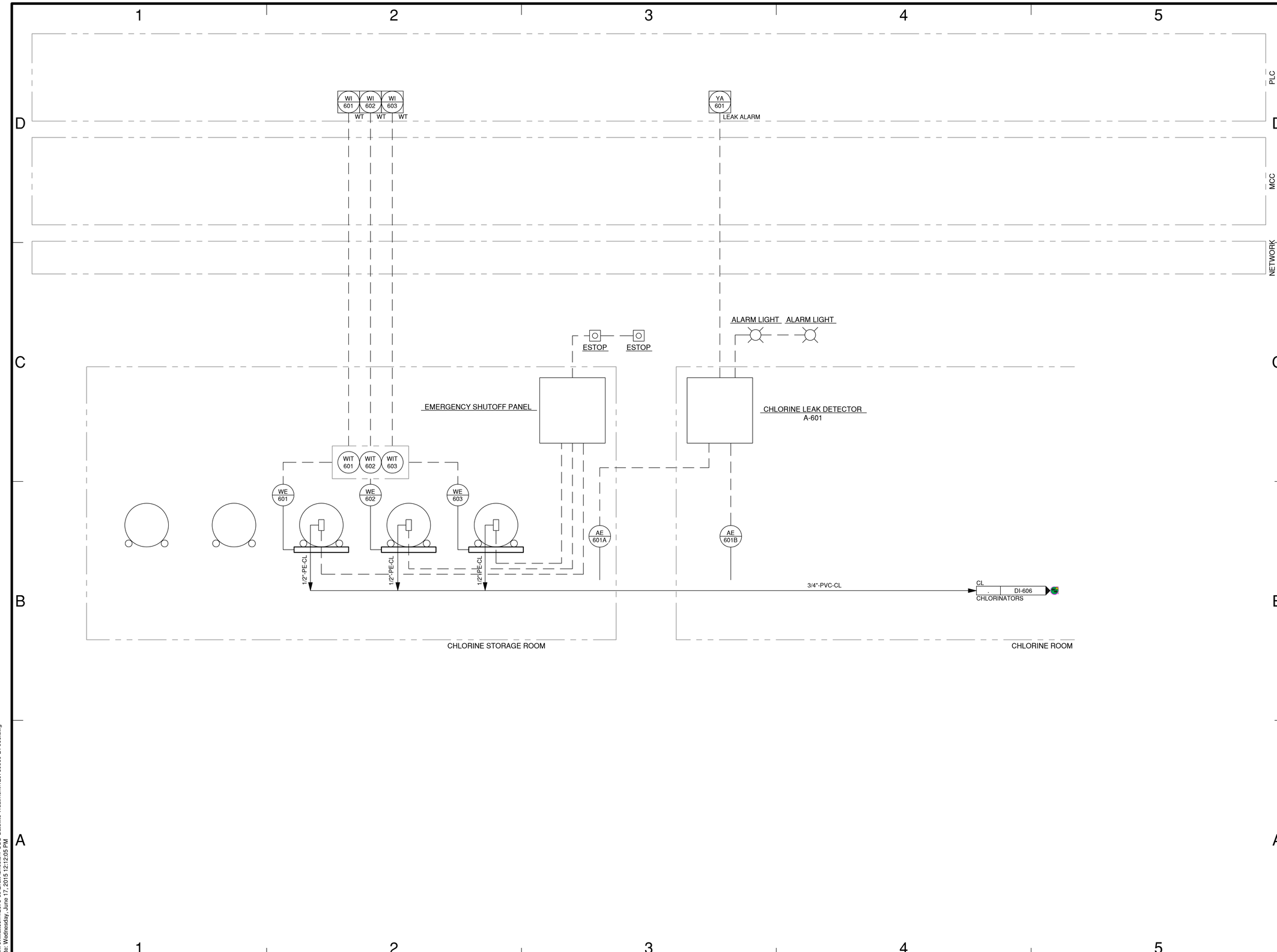

CMT

License No. 184-000613

CONSULTANTS

MAY 2015

CSO SATELLITE
TREATMENT FACILITY
CONTRACT NO. 1

OWNER

MATTOON

MATTOON, ILLINOIS: *Working Together to Build the Future*

CITY OF MATTOON

MATTOON, ILLINOIS

MARK	DATE	DESCRIPTION

PROJECT NO:	12078-03-00
CAD DWG FILE:	120780300-DI-605.DWG
DESIGNED BY:	LDW
DRAWN BY:	DLB
CHECKED BY:	SJB
APPROVED BY:	

COPYRIGHT: CRAWFORD, MURPHY & TILLY, INC. 2015

SHEET TITLE

PID - CHLORINATION - SHEET 1

DI-605

SHEET 76 OF 128

Path: J:\Mattoon\12078-03\Draw\Sheets\1-CSO Satellite Treatment\120780300-DI-605.dwg
Date: Wednesday, June 17, 2015 12:12:05 PM

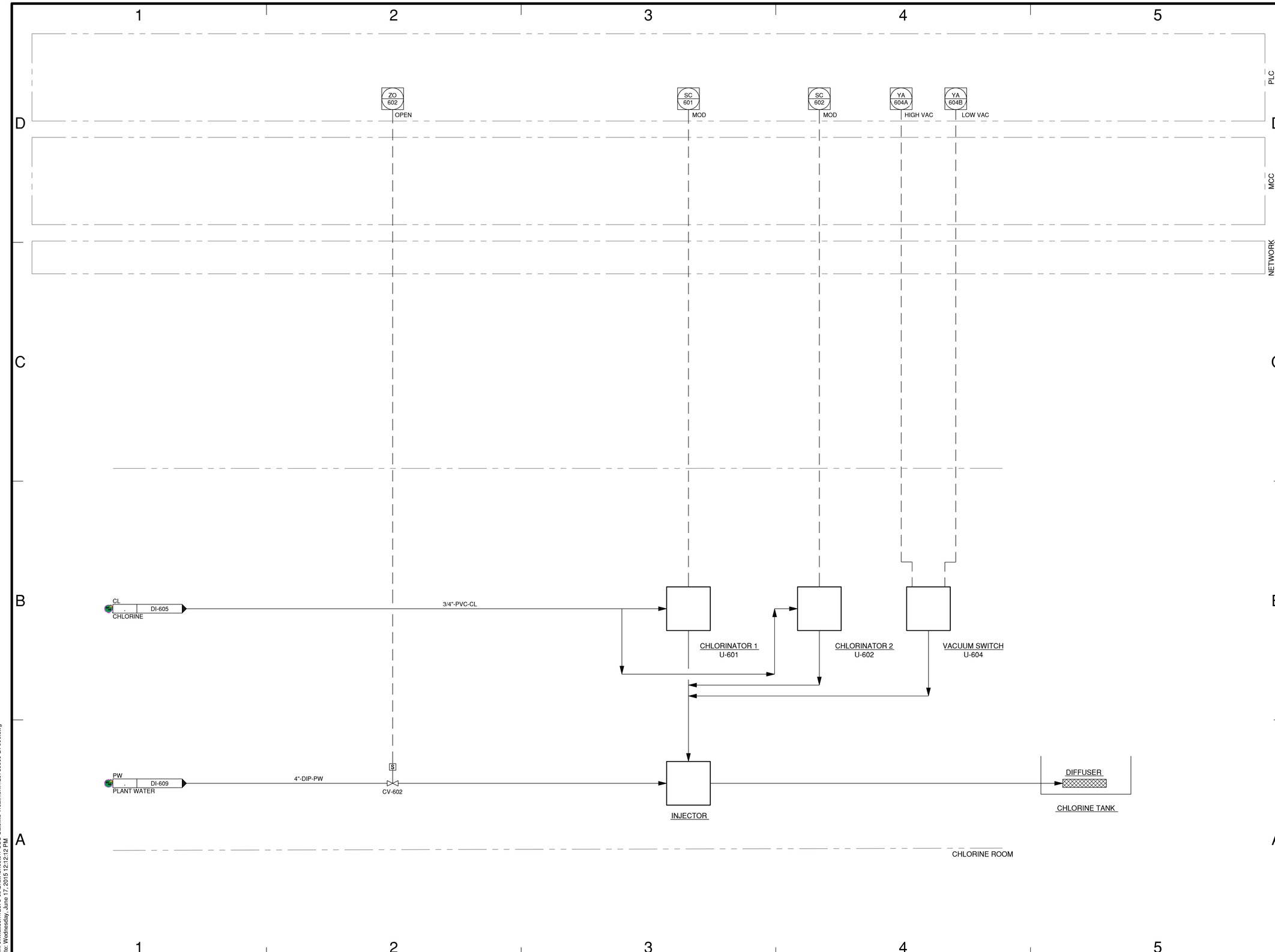

CMT

License No. 184-000613

CONSULTANTS

MAY 2015

CSO SATELLITE
TREATMENT FACILITY
CONTRACT NO. 1

OWNER

MATTOON

MATTOON, ILLINOIS: *Working Together to Build the Future*

CITY OF MATTOON

MATTOON, ILLINOIS

MARK	DATE	DESCRIPTION

PROJECT NO:	12078-03-00
CAD DWG FILE:	120780300-DI-606.DWG
DESIGNED BY:	LDW
DRAWN BY:	DLB
CHECKED BY:	SJB
APPROVED BY:	

COPYRIGHT: CRAWFORD, MURPHY & TILLY, INC. 2015

SHEET TITLE

PID - CHLORINATION - SHEET 2

DI-606

SHEET 77 OF 128

Path: J:\Mattoon\12078-03\Draw\Sheets\1-CSO Satellite Treatment\120780300-DI-606.dwg
Date: Wednesday, June 17, 2015 12:12:12 PM

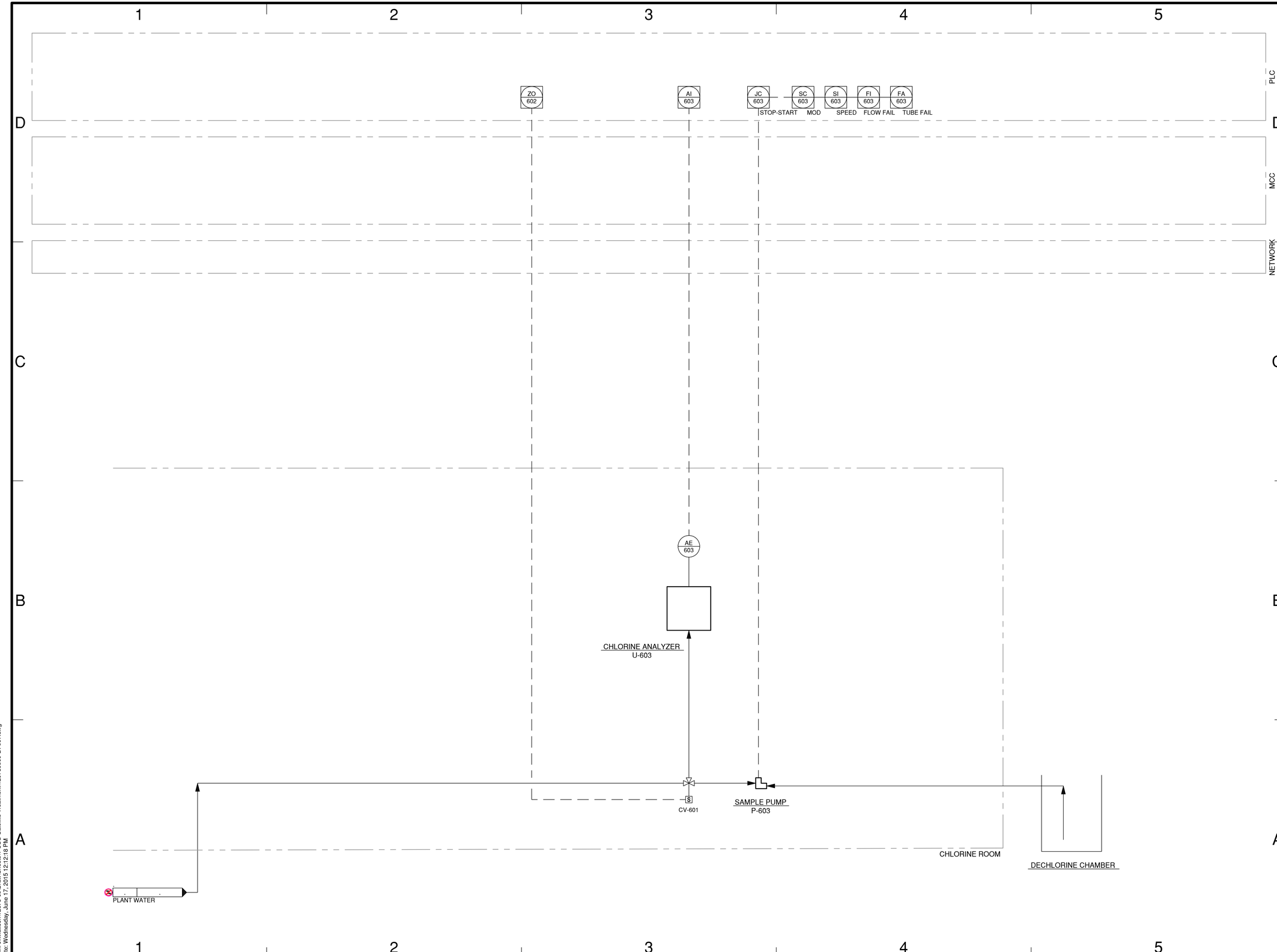

CMT

License No. 184-000613

CONSULTANTS

MAY 2015

CSO SATELLITE
TREATMENT FACILITY
CONTRACT NO. 1

OWNER

MATTOON

MATTOON, ILLINOIS: *Working Together to Build the Future*

CITY OF MATTOON

MATTOON, ILLINOIS

MARK	DATE	DESCRIPTION

PROJECT NO:	12078-03-00
CAD DWG FILE:	120780300-DI-607.DWG
DESIGNED BY:	LDW
DRAWN BY:	DLB
CHECKED BY:	SJB
APPROVED BY:	
COPYRIGHT:	CRAWFORD, MURPHY & TILLY, INC. 2015

SHEET TITLE

PID - CHLORINATION - SHEET 3

DI-607

SHEET 78 OF 128

Path: J:\Mattoon\12078-03\Draw\Sheets\1-CSO Satellite Treatment\120780300-DI-607.dwg
Date: Wednesday, June 17, 2015 12:12:18 PM

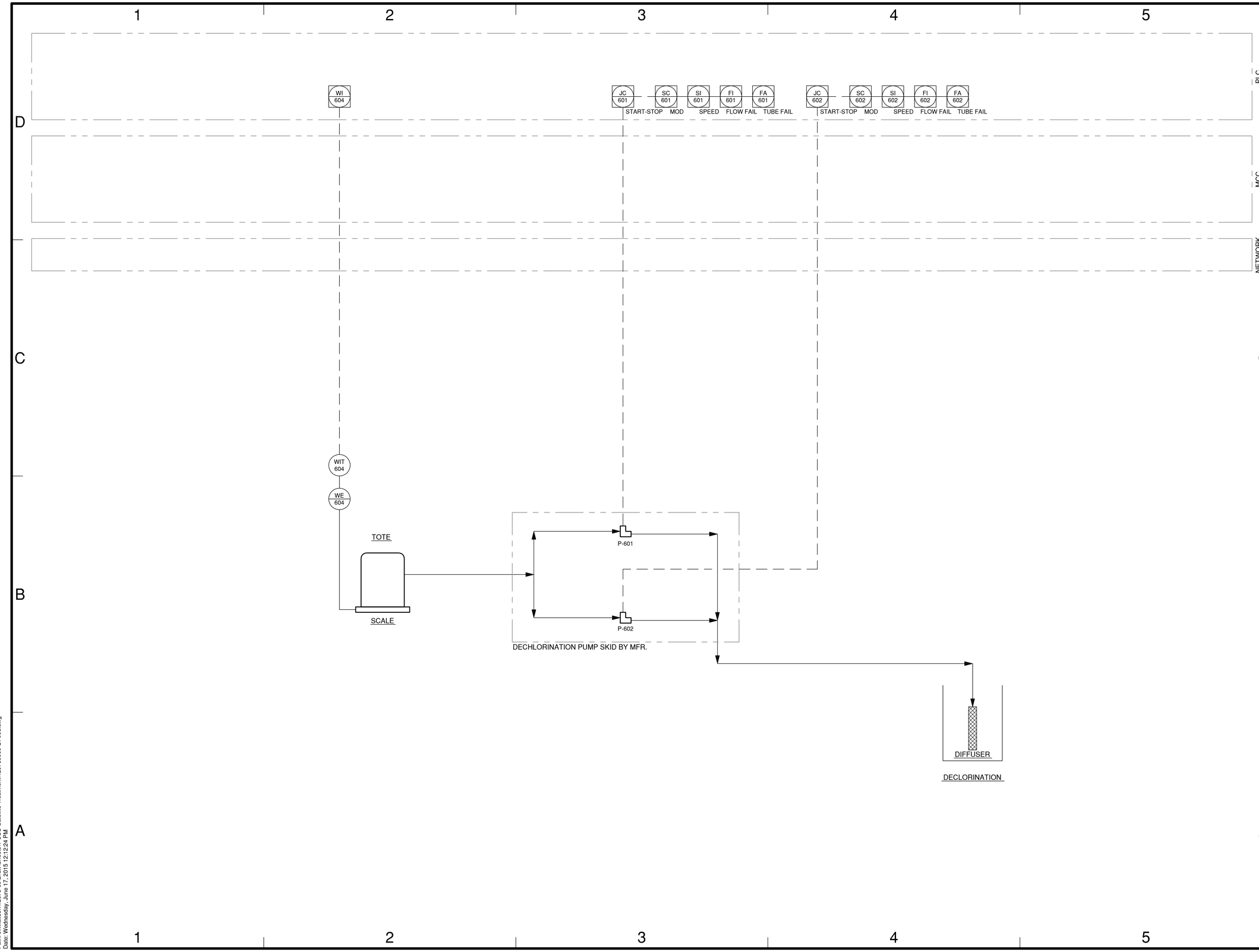

CMT

License No. 184-000613

CONSULTANTS

MAY 2015

CSO SATELLITE
TREATMENT FACILITY
CONTRACT NO. 1

OWNER

MATTOON

MATTOON, ILLINOIS: *Working Together to Build the Future*

CITY OF MATTOON

MATTOON, ILLINOIS

MARK	DATE	DESCRIPTION

PROJECT NO:	12078-03-00
CAD DWG FILE:	120780300-DI-608.DWG
DESIGNED BY:	LDW
DRAWN BY:	DLB
CHECKED BY:	SJB
APPROVED BY:	

COPYRIGHT: CRAWFORD, MURPHY & TILLY, INC. 2015

SHEET TITLE

PID - DECHLORINATION

DI-608

SHEET 79 OF 128

Path: J:\Mattoon\12078-03\Draw\Sheets\1-CSO Satellite Treatment\120780300-DI-608.dwg
Date: Wednesday, June 17, 2015 12:12:24 PM

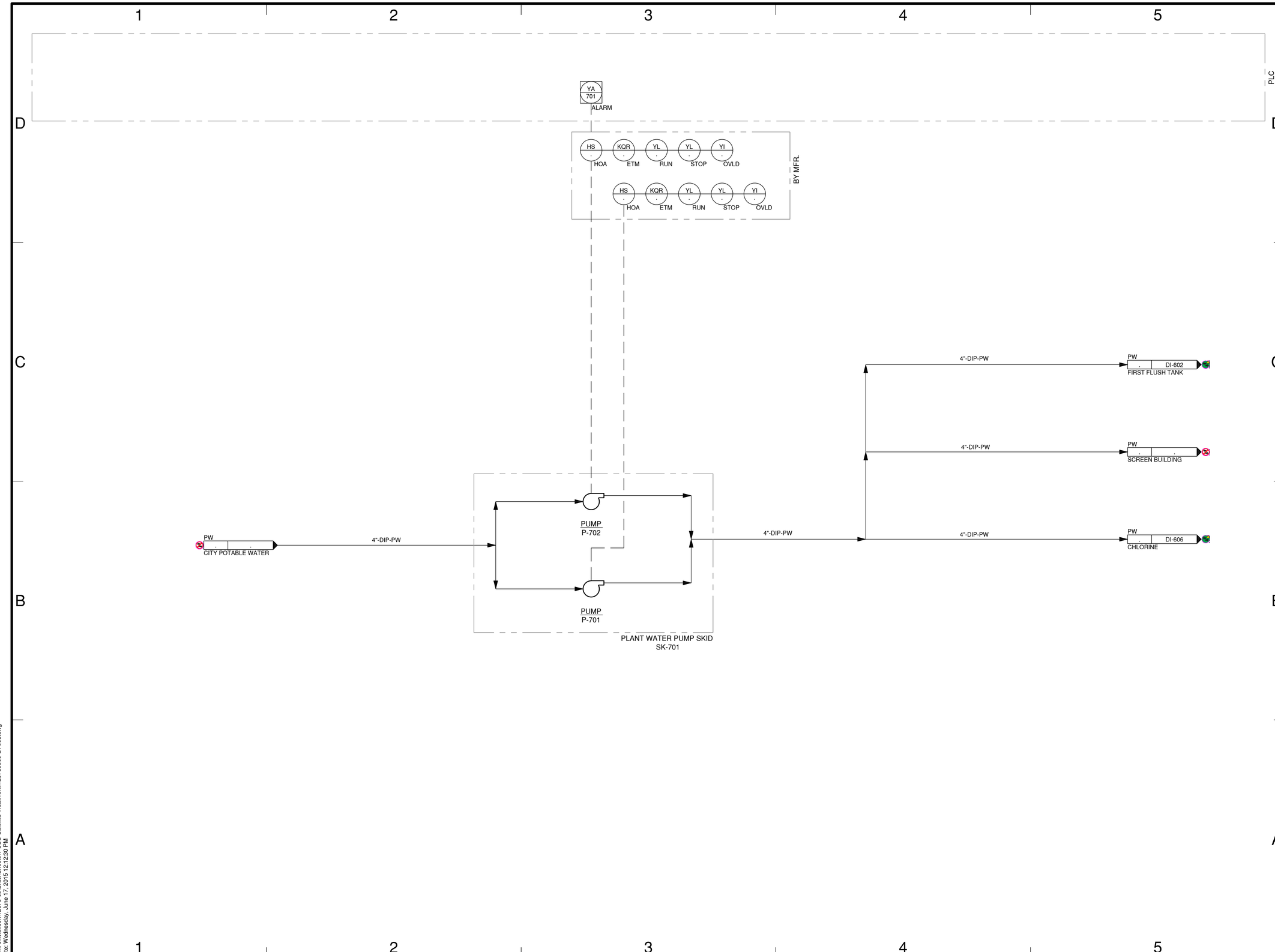

CMT

License No. 184-000613

CONSULTANTS

MAY 2015

CSO SATELLITE
TREATMENT FACILITY
CONTRACT NO. 1

OWNER

MATTOON

MATTOON, ILLINOIS: *Working Together to Build the Future*

CITY OF MATTOON

MATTOON, ILLINOIS

MARK	DATE	DESCRIPTION

PROJECT NO:	12078-03-00
CAD DWG FILE:	120780300-DI-609.DWG
DESIGNED BY:	LDW
DRAWN BY:	DLB
CHECKED BY:	SJB
APPROVED BY:	

COPYRIGHT: CRAWFORD, MURPHY & TILLY, INC. 2015

SHEET TITLE

PID - PLANT WATER

DI-609

SHEET 80 OF 128

Path: J:\Mattoon\12078-03\Draw\Sheets\1-CSO Satellite Treatment\120780300-DI-609.dwg
Date: Wednesday, June 17, 2015 12:12:30 PM

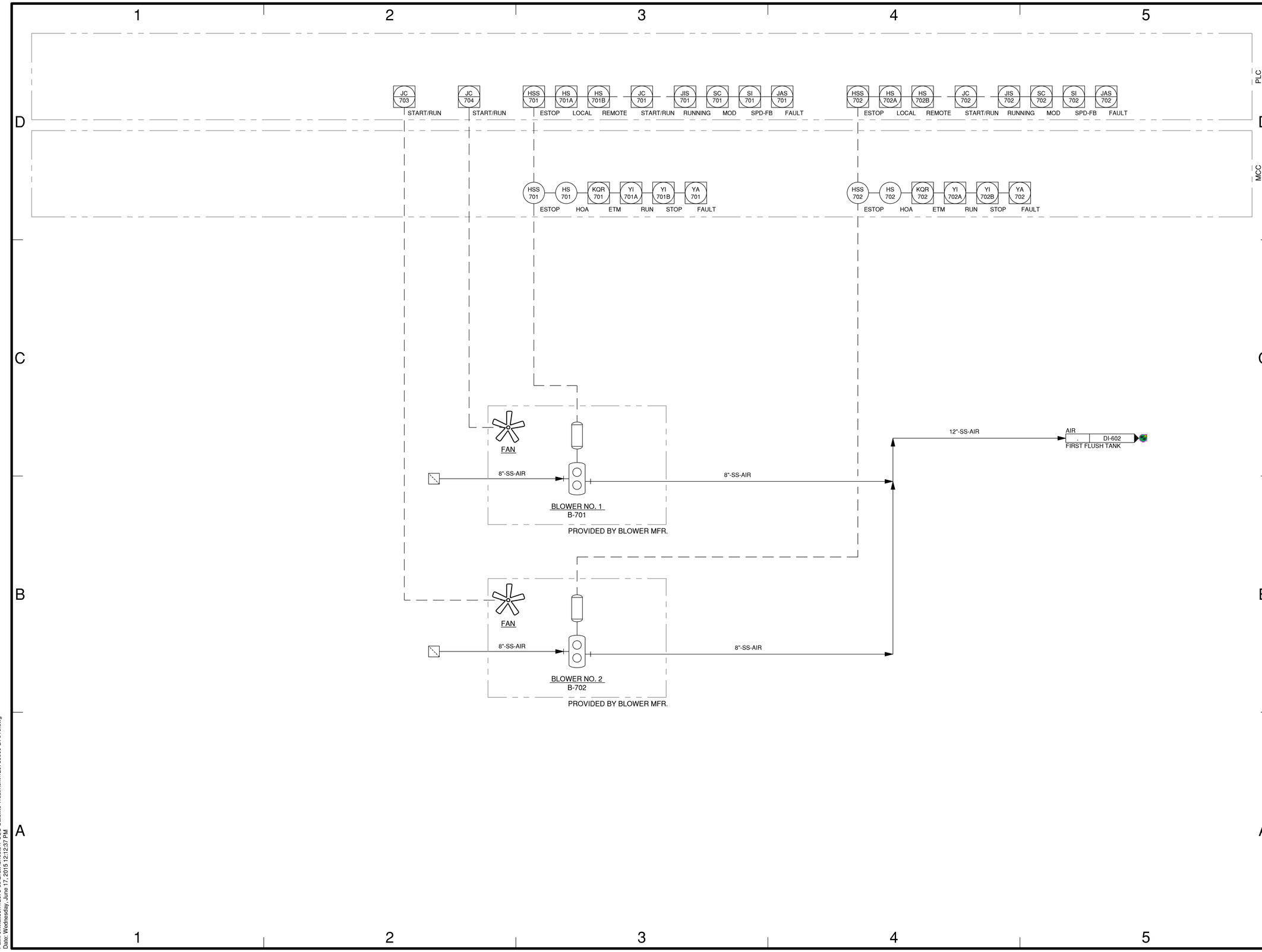

CMT

License No. 184-000613

CONSULTANTS

MAY 2015

CSO SATELLITE
TREATMENT FACILITY
CONTRACT NO. 1

OWNER

MATTOON

MATTOON, ILLINOIS: *Working Together to Build the Future*

CITY OF MATTOON

MATTOON, ILLINOIS

MARK	DATE	DESCRIPTION

PROJECT NO:	12078-03-00
CAD DWG FILE:	120780300-DI-610.DWG
DESIGNED BY:	LDW
DRAWN BY:	DLB
CHECKED BY:	SJB
APPROVED BY:	

COPYRIGHT: CRAWFORD, MURPHY & TILLY, INC. 2015

SHEET TITLE

PID - BLOWERS

DI-610

SHEET 81 OF 128

Path: J:\Mattoon\12078-03\Draw\Sheets\1-CSO Satellite Treatment\120780300-DI-610.dwg
Date: Wednesday, June 17, 2015 12:12:37 PM

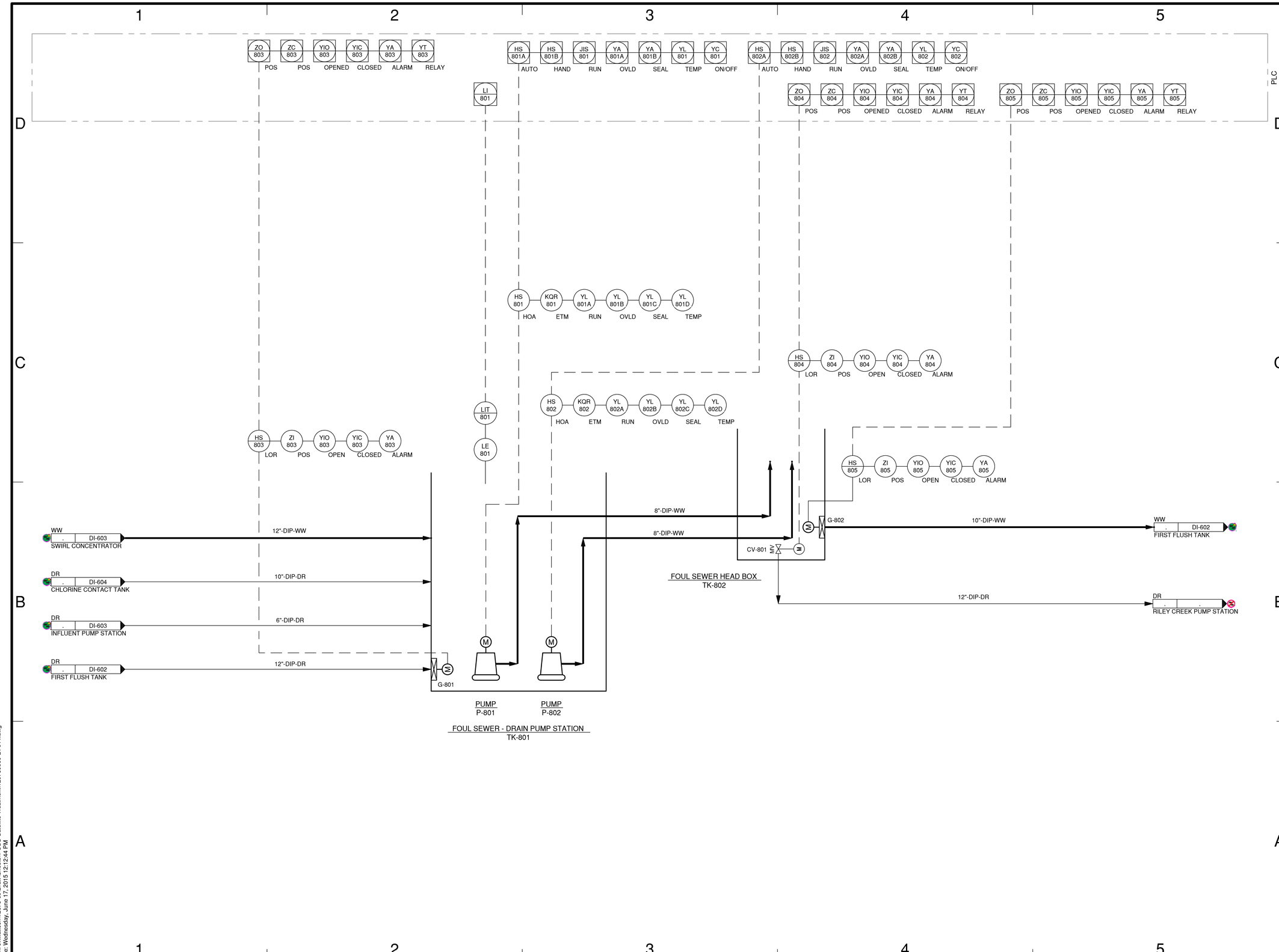

CMT

License No. 184-000613

CONSULTANTS

MAY 2015

CSO SATELLITE TREATMENT FACILITY CONTRACT NO. 1

OWNER

MATTOON

MATTOON, ILLINOIS: *Working Together to Build the Future*

CITY OF MATTOON

MATTOON, ILLINOIS

MARK	DATE	DESCRIPTION

PROJECT NO:	12078-03-00
CAD DWG FILE:	120780300-DI-611.DWG
DESIGNED BY:	LDW
DRAWN BY:	DLB
CHECKED BY:	SJB
APPROVED BY:	

COPYRIGHT: CRAWFORD, MURPHY & TILLY, INC. 2015

SHEET TITLE

PID - FOUL SEWER - DRAIN PUMP STATION

DI-611

SHEET 82 OF 128

Path: J:\Mattoon\12078-03\Draw\Sheets\1-CSO Satellite Treatment\120780300-DI-611.dwg
Date: Wednesday, June 17, 2015 12:12:44 PM

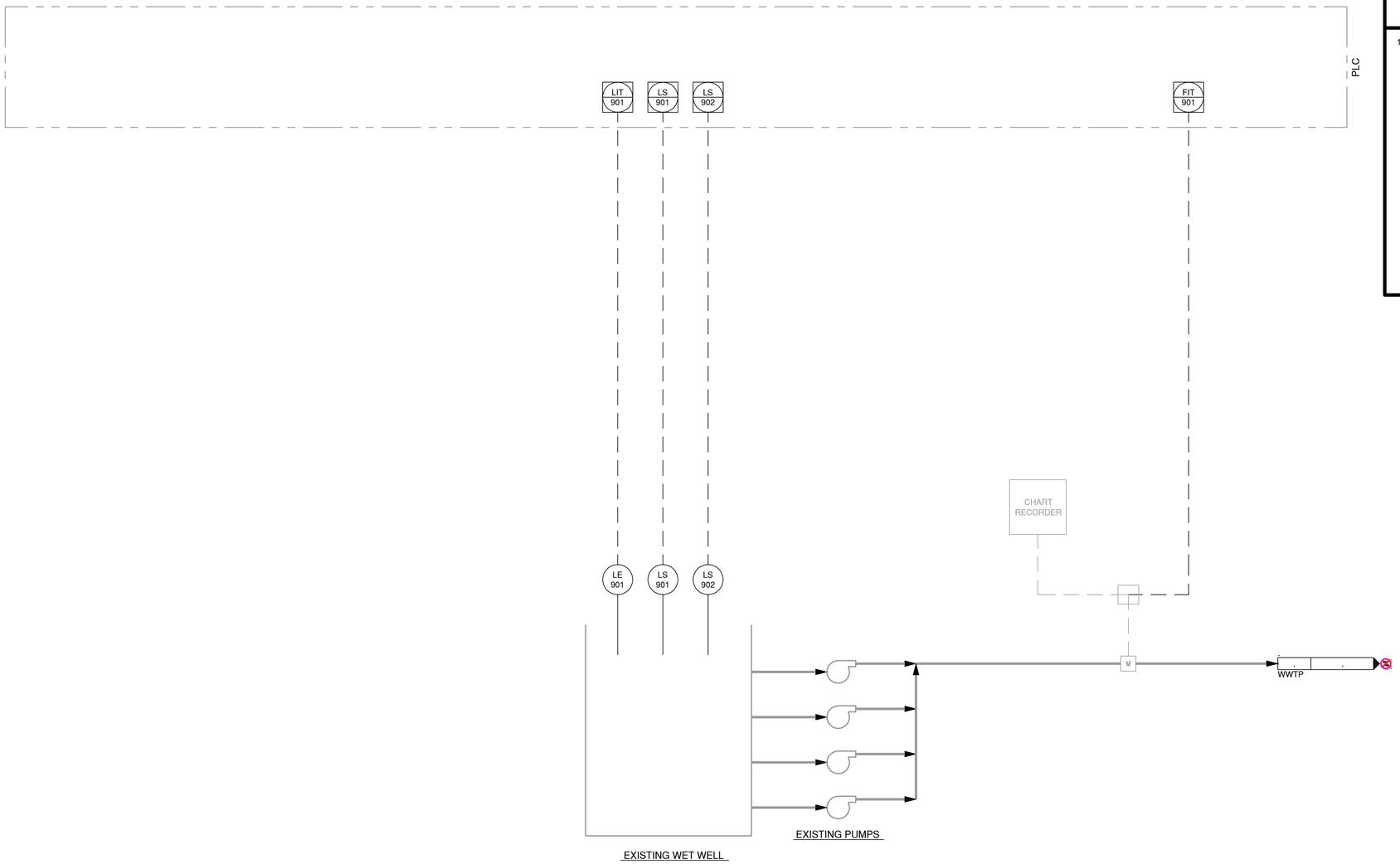

GENERAL NOTES

1. EXISTING INPUT/OUTPUTS TO BE RELOCATED TO NEW PLC ARE NOT SHOWN.

CMT

License No. 184-000613

CONSULTANTS

MAY 2015

CSO SATELLITE TREATMENT FACILITY CONTRACT NO. 1

OWNER

MATTOON

MATTOON, ILLINOIS: *Working Together to Build the Future*

CITY OF MATTOON

MATTOON, ILLINOIS

MARK	DATE	DESCRIPTION

PROJECT NO:	12078-03-00
CAD DWG FILE:	120780300-DI-612.DWG
DESIGNED BY:	LDW
DRAWN BY:	DLB
CHECKED BY:	SJB
APPROVED BY:	

COPYRIGHT: CRAWFORD, MURPHY & TILLY, INC. 2015

SHEET TITLE

PID - RILEY CREEK PUMP STATION

DI-612

SHEET 83 OF 128

Path: J:\Mattoon\12078-03\Draw\Sheets\1-CSO Satellite Treatment\120780300-DI-612.dwg
Date: Wednesday, June 17, 2015 12:12:50 PM

GENERAL NOTES

1. THE CONTRACTOR SHALL VERIFY ALL CONDITIONS EXISTING AT THE SITE PRIOR TO CONSTRUCTION.
2. PRIOR TO THE START OF CONSTRUCTION, THE CONTRACTOR SHALL LAYOUT THE PROPOSED IMPROVEMENTS AND SHALL VERIFY ALL DIMENSIONS, ANGLES AND COORDINATES SHOWN. SHOULD THE CONTRACTOR NOTE ANY DISCREPANCIES OR CONFLICTS, HE SHALL NOTIFY THE ENGINEER PRIOR TO PROCEEDING WITH THE PROJECT WORK.
3. THE CONTRACTOR SHALL MAINTAIN POSITIVE DRAINAGE AT ALL TIMES. COSTS OF TEMPORARY CULVERTS, DITCHES, PUMPS OR OTHER ITEMS REQUIRED TO MAINTAIN POSITIVE DRAINAGE SHALL BE INCIDENTAL TO THE CONTRACT.
4. CONTRACTOR SHALL BE SOLELY RESPONSIBLE FOR JOBSITE SAFETY. CONTRACTOR SHALL PROVIDE TEMPORARY FENCING TO SECURE THE SITE AND PREVENT UNAUTHORIZED ENTRY.
5. INFORMATION ON THE PLANS REGARDING UNDERGROUND UTILITIES IS TAKEN FROM THE BEST AVAILABLE RECORDS, BUT IS NOT REPRESENTED AS BEING ENTIRELY CORRECT OR COMPLETE. THE CONTRACTOR SHALL NOTIFY OPERATING AGENCY IN ADVANCE OF CROSSING OVER OR UNDER ANY UTILITIES SHOWN ON THE PLANS. THE CONTRACTOR SHALL NOTIFY OPERATING AGENCY AND ENGINEER IMMEDIATELY UPON DISCOVERY OF ANY UTILITY NOT SHOWN ON THE PLANS.
6. PRIOR TO THE START OF CONSTRUCTION, THE CONTRACTOR SHALL ARRANGE TO HAVE ALL UNDERGROUND UTILITIES INCLUDING WATER, GAS, ELECTRIC, STORM SEWER, SANITARY SEWER, TELEPHONE AND CABLE TV LOCATED AND SUITABLY MARKED. SHOULD A UTILITY BE IN CONFLICT WITH THE PROPOSED CONSTRUCTION, THE ENGINEER SHALL BE NOTIFIED AT ONCE. IF UTILITIES INTERFERE WITH THE CONSTRUCTION ALIGNMENT, THEY SHALL BE PROTECTED.
7. CONTRACTOR SHALL REGULARLY CLEAN UP THE SITE THROUGHOUT THE COURSE OF THE WORK. CLEANUP SHALL INCLUDE REMOVAL OF ALL EXCESS DIRT, CONCRETE, PIPE PIECES, LUMBER SCRAPS, PAPER CUPS AND OTHER ITEMS LEFT BY THE CONTRACTOR'S FORCES.
8. AT WALL PENETRATIONS, THE CONTRACTOR SHALL BOX OUT AROUND PIPING AND PROVIDE A KEYWAY, EXCEPT AT THOSE LOCATIONS WHERE WALL SLEEVES ARE REQUIRED OR OTHER REQUIREMENTS ARE INDICATED. THE CONTRACTOR SHALL PLACE THE PIPE AND GROUT WITH NON-SHRINK GROUT AT BOX OUT LOCATIONS.
9. LAY PIPE TO UNIFORM GRADE BETWEEN INDICATED ELEVATION POINTS.
10. ALL BURIED DUCTILE IRON PIPE AND FITTINGS SHALL BE ASPHALT COATED OR FUSION-BONDED EPOXY AND INTERIOR CEMENT LINED, EXCEPT FOR AIR PIPING.
11. SEE PIPING SPECIFICATIONS FOR PIPE MATERIAL AND JOINT REQUIREMENTS.
12. SIZE OF FITTINGS SHOWN ON PLANS SHALL CORRESPOND TO ADJACENT STRAIGHT RUN OF PIPE, UNLESS OTHERWISE INDICATED.
13. NUMBER AND LOCATION OF UNIONS SHOWN ON PLANS IS ONLY APPROXIMATE. PROVIDE ALL UNIONS NECESSARY TO FACILITATE CONVENIENT REMOVAL OF VALVES AND MECHANICAL EQUIPMENT.
14. WHERE DUCTILE IRON PIPING LEAVES A STRUCTURE INTO A BURIED APPLICATION, A FLEXIBLE COUPLING OR JOINT SHALL BE USED WITHIN TWO FEET OF THE STRUCTURE.
15. ALL BURIED VALVES SHALL BE PROVIDED WITH VALVE BOXES AND EXTENSION STEMS AS INCIDATED IN THE SPECIFICATIONS FOR THAT PARTICULAR TYPE OF VALVE.
16. THRUST BLOCKING SHALL BE AS INDICATED IN THE SPECIFICATIONS OR AS DETAILED ON THE DRAWINGS.
17. ALL GALVANIZED PIPE JOINTS AND DAMAGED GALVANIZED SURFACES SHALL BE COATED WITH COLD GALVANIZING.
18. PRIOR TO CONTRACTOR COMMENCING WORK ON THE RILEY CREEK PUMP STATION, COORDINATION SHALL BE MADE WITH PLANT PERSONNEL.
19. ALL MATERIALS AND EQUIPMENT INDICATED ON THE DRAWINGS AND IN THE SPECIFICATIONS TO BE REMOVED SHALL BE REMOVED AND PROPERLY DISPOSED OF OFF-SITE BY THE CONTRACTOR. CONTRACTOR SHALL FOLLOW ALL LOCAL, STATE AND FEDERAL REQUIREMENTS FOR DISPOSAL OF ALL MATERIALS TO BE REMOVED FROM THE SITE.
20. UNLESS NOTED ON DRAWINGS, ALL PIPING GREATER THAN 50 INCH SHALL BE FIBERGLASS REINFORCED PLASTIC.
21. UNLESS NOTED ON DRAWINGS, ALL BURIED PIPING SHALL HAVE MECHANICAL JOINT FITTINGS. ALL FITTINGS TO BE RESTRAINED SHALL INCLUDE THE NECESSARY PIPE LENGTHS ON EITHER SIDE OF THE FITTING AS SHOWN IN THE RESTRAINED JOINT LENGTH TABLE ON SHEET D-001.
22. STAINLESS STEEL PIPE PENETRATIONS SHALL HAVE A SILICONE RUBBER TYPE WALL SEAL. ALL OTHER PENETRATIONS SHALL HAVE A LINK SEAL TYPE WALL SEAL.

RESTRAINED JOINT LENGTH TABLE

Type of Pipe	Soil Type	Fitting Type	Nominal Size	Restrained Length on Each Side of the Fitting
D.I.P.	CL	Dead End	4"	20 ft
D.I.P.	CL	11.25° Bend	4"	2 ft
D.I.P.	CL	22.5° Horiz. Bend	4"	3 ft
D.I.P.	CL	45° Bend	4"	6 ft
D.I.P.	CL	90° Bend	4"	14 ft
D.I.P.	CL	TEE	4"	4 ft on either side, 9 ft on branch
D.I.P.	CL	Reducer	4" x 2"	10 ft on large side of reducer

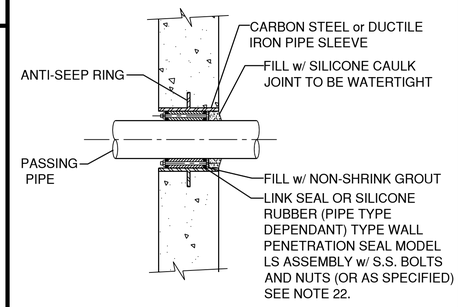

NEW WALL PENETRATION SEAL DETAIL (519)
N.T.S.

NOTE:
CONTRACTOR TO COORDINATE PIPE SLEEVE AND LINK SEAL SIZES.

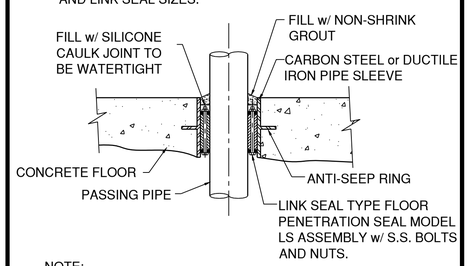

NOTE:
CONTRACTOR TO COORDINATE PIPE SLEEVE AND LINK SEAL SIZES.

FLOOR PENETRATION SEAL DETAIL (518)
N.T.S.

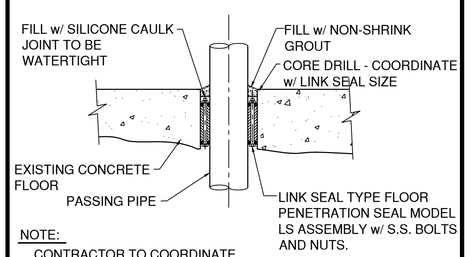

NOTE:
CONTRACTOR TO COORDINATE CORE CUT AND LINK SEAL SIZES.

EXISTING FLOOR PENETRATION SEAL DETAIL (517)
N.T.S.

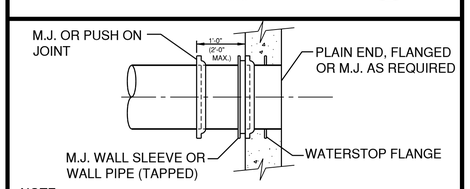

NOTE:
THIS DETAIL APPLIES TO 4" THRU 36" PIPE.

DUCTILE IRON PIPE WITH A FLEXIBLE JOINT

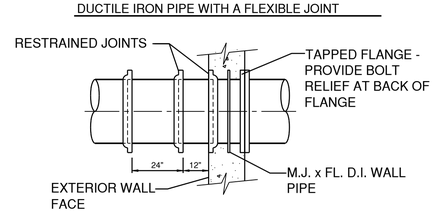

D.I. WALL PIPE DETAIL (510)
N.T.S.

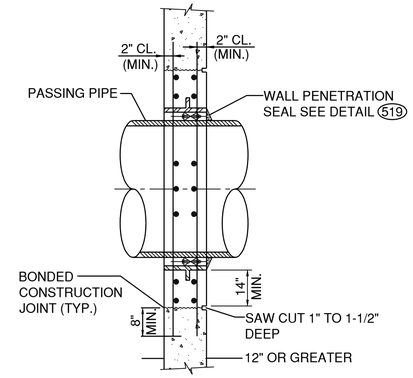

PIPE PENETRATION CUTOUT FOR EXISTING WALL DETAIL (271)
N.T.S.

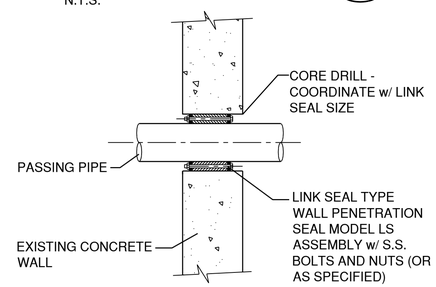

EXISTING WALL PENETRATION SEAL DETAIL (516)
N.T.S.

NOTE:
CONTRACTOR TO COORDINATE CORE CUT AND LINK SEAL SIZES.

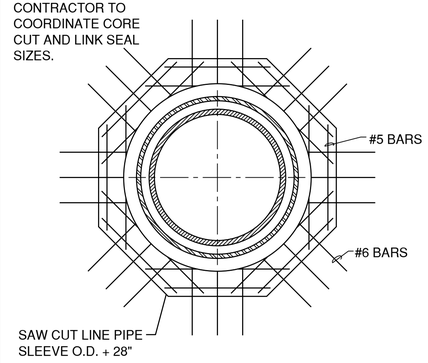

NOTES:
1. ALL RADIAL BARS ARE #6 @ 6" CTR'S TO BE INSERTED 8" MINIMUM AND EPOXY INTO 1 1/2" DIAMETER HOLES DRILLED INTO EXISTING CONCRETE. ALL CROSS BARS ARE #5 @ 4" CTR'S.
2. PROVIDE 2 LAYERS OF REBAR FOR SLABS 12" OR THICKER

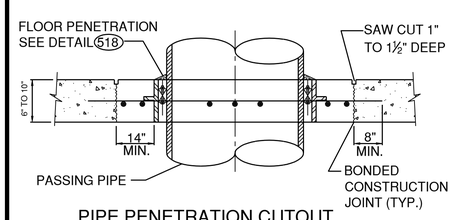

PIPE PENETRATION CUTOUT FOR EXISTING SLAB DETAIL (270)
N.T.S.

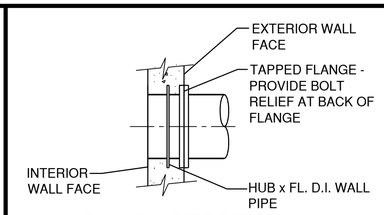

D.I. WALL PIPE DETAIL (511)
N.T.S.

SYMBOL LEGEND

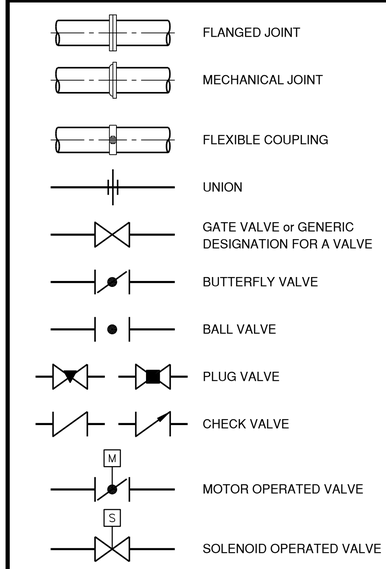

ABBREVIATIONS

AFF	ABOVE FINISHED FLOOR	MTD	MOUNT (ED), (ING)
ALT	ALTERNATE	NC	NORMALLY CLOSED
ALUM	ALUMINUM	NO	NORMALLY OPENED
APPROX	APPROXIMATE	NTS	NOT TO SCALE
BF	BLIND FLANGE	OD	OUTSIDE DIAMETER
CI	CAST IRON	PCC	PORTLAND CEMENT CONCRETE
CIPC	CAST-IN-PLACE CONCRETE	PLW	PLANT WATER
CL	CENTERLINE	PT	POINT
CLR	CLEAR	PVC	POLYVINYL CHLORIDE
CONC	CONCRETE	R	RADIUS
CPLG	COUPLING	RAS	RETURN ACTIVATED SLUDGE
CTR OR CTS	CENTER	REM	REMOVE
℄	CENTERLINE	REQD OR REQ'D	REQUIRED
DEM	"DEMOLISH, DEMOLITION"	RPM	ROTATIONS PER MINUTE
DIA	DIAMETER	SAN	SANITARY
DIM	DIMENSION	SANS	SANITARY SEWER
DIP	DUCTILE IRON PIPE	SCH	SCHEDULE
DR	DRAIN	SDG	SLIDE GATE
EA	EACH	SECT	SECTION
EL OR ELEV	ELEVATION	SL	SLUDGE
EQ	EQUAL	SLG	SLUICE GATE
EXIST	EXISTING	SPEC	SPECIFICATION (S)
FIN	FINISH (ED)	SQ	SQUARE
FL OR FLG	FLANGE	SS	STORM SEWER
FRP	FIBERGLASS REINFORCED PLASTIC	SSP	STAINLESS STEEL PIPE
FT	FOOT OR FEET	SST	STAINLESS STEEL
GAL	GALLONS	STG	STOP GATE
GALV	GALVANIZED	TOC	TOP OF CONCRETE
GKT	GASKET (ED)	TW	TOP OF WALL
GP	GALVANIZED PIPE	TYP	TYPICAL
GPM	GALLONS PER MINUTE	VIB ISOL	VIBRATION ISOLATOR
HB	HOSE BIBB	W	WIDTH, WIDE
HDG	HOT DIPPED GALVANIZED	WSL	WATER SURFACE LEVEL
HP	HORSEPOWER	INV	INVERT
HWL	HIGH WATER LEVEL		
ID	INSIDE DIAMETER		
IPS	IRON PIPE SIZE		
LB	POUND		
LWL	LOW WATER LEVEL		
MFR	MANUFACTURER		
MGD	MILLION GALLONS PER DAY		
MIN	MINIMUM/MINERAL		
MISC	MISCELLANEOUS		
MJ	MECHANICAL JOINT		

CMT
License No. 184-000613
CONSULTANTS

MAY 2015

CSO SATELLITE TREATMENT FACILITY CONTRACT NO. 1

OWNER

MATTOON
MATTOON, ILLINOIS: *Working Together to Build the Future*

CITY OF MATTOON

MATTOON, ILLINOIS

MARK	DATE	DESCRIPTION

PROJECT NO:	12078-03-00
CAD DWG FILE:	120780300-D-001.DWG
DESIGNED BY:	SJB
DRAWN BY:	DLB
CHECKED BY:	SJB
APPROVED BY:	

COPYRIGHT: CRAWFORD, MURPHY & TILLY, INC. 2015

SHEET TITLE
PROCESS GENERAL NOTES, LEGEND AND DETAILS

D-001

Path: J:\Mattoon\12078-03\Draw\Sheets\1-CSO Satellite Treatment\120780300-D-001.dwg
Date: Wednesday, June 17, 2015 11:58:16 AM

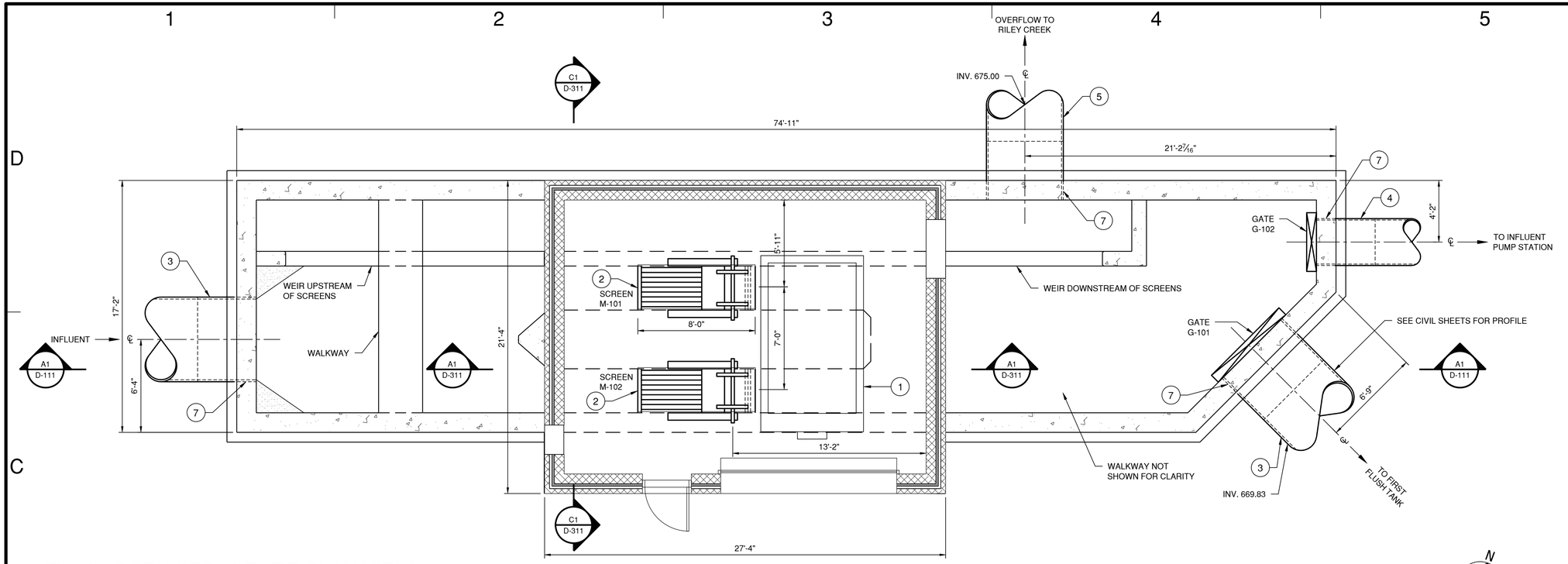

C1 SCREEN STRUCTURE PLAN VIEW
1/4"=1-0"

NOMENCLATURE

1. DUMPSTER, PROVIDED BY OWNER
2. MECHANICAL BARSCREEN
3. 66 IN. DIAMATER GFRPM PIPE
4. 36 IN. DIAMETER DUCTILE IRON PIPE
5. 60 IN. DIAMETER GRFPM PIPE
6. WEIR PLATE
7. WALL PENETRATION, SEE DETAIL 519

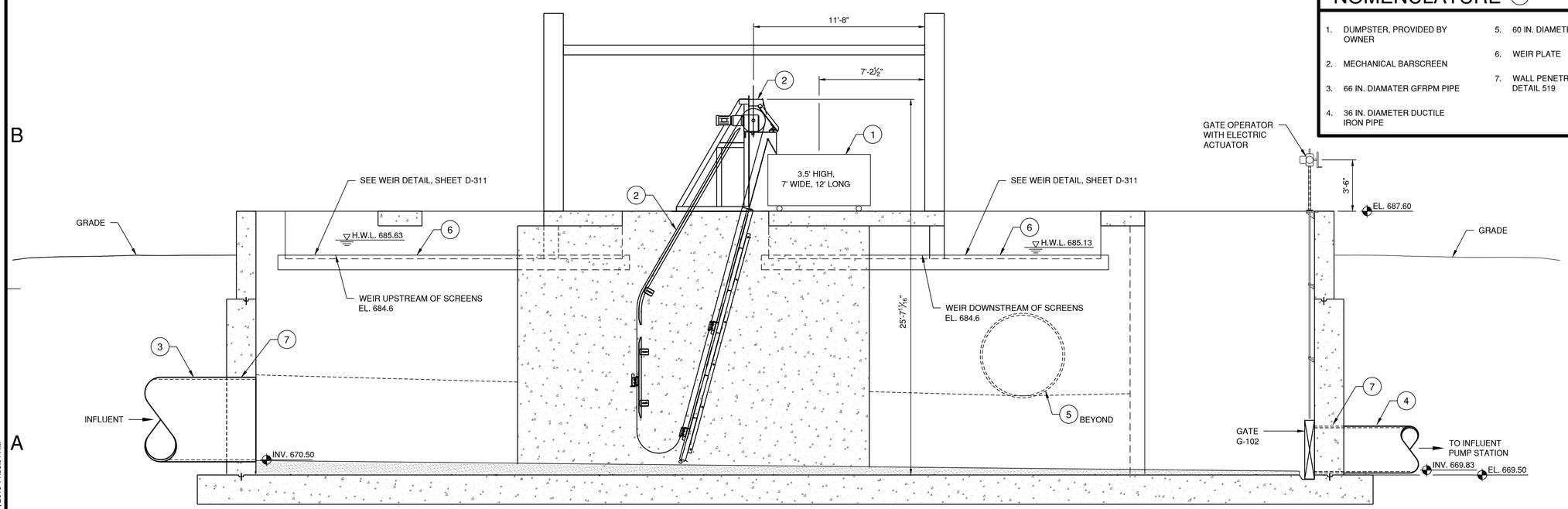

A1 SECTION VIEW
1/4"=1-0"

CMT
License No. 184-000613
CONSULTANTS

MAY 2015

CSO SATELLITE TREATMENT FACILITY CONTRACT NO. 1

OWNER

MATTOON
MATTOON, ILLINOIS: *Working Together to Build the Future*

CITY OF MATTOON

MATTOON, ILLINOIS

MARK	DATE	DESCRIPTION

PROJECT NO:	12078-03-00
CAD DWG FILE:	120780300-D-111.DWG
DESIGNED BY:	SG
DRAWN BY:	DLB
CHECKED BY:	SJB
APPROVED BY:	

COPYRIGHT: CRAWFORD, MURPHY & TILLY, INC. 2015

SHEET TITLE

SCREEN STRUCTURE PLAN AND SECTION

D-111

SHEET 85 OF 128

Path: J:\Mattoon\12078-03\Draw\Sheets\1-CSO Satellite Treatment\120780300-D-111.dwg
Date: Wednesday, June 17, 2015 11:58:31 AM

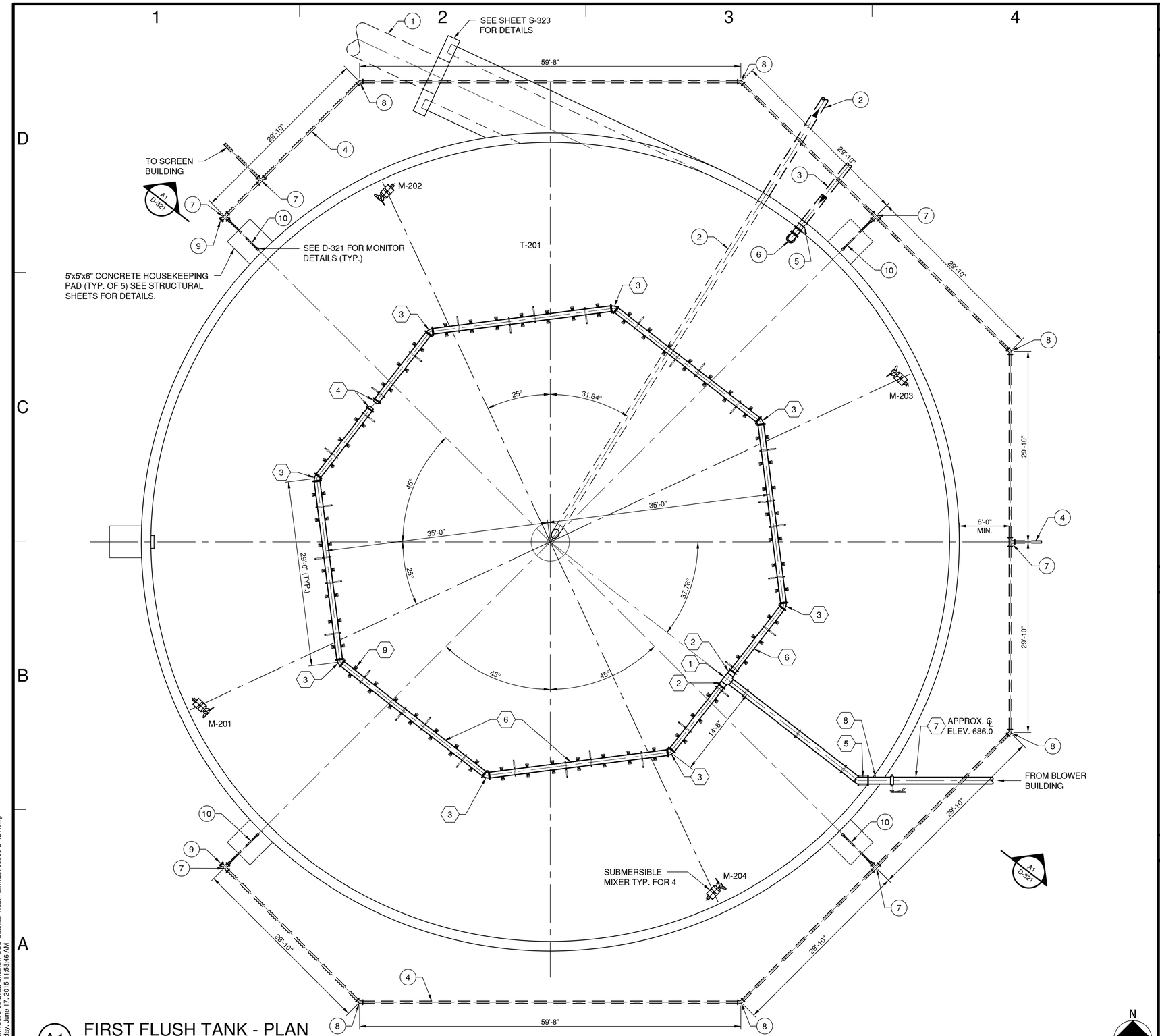

A1 FIRST FLUSH TANK - PLAN
1/8"=1'-0"

PIPE NOMENCLATURE

1. 66" DIA. GFRPM PIPE FROM SCREEN STRUCTURE
2. 12" DIA. D.I.P. DRAIN LINE TO FOUL SEWER-DRAIN PUMP STATION.
3. 10" DIA. D.I.P. FOUL SEWER FROM FOUL SEWER-DRAIN PUMP STATION.
4. 4" DIA. DIP WASHWATER FORCEMAIN FROM BLOWER BUILDING.
5. 10" FL. x MJ WALL PIPE - DRILLED & TAPPED FOR STUDS
6. 10" FL. 90° BEND W/ THRUST BLOCK
7. 4" D.I. TEE W/ THRUST BLOCK
8. 4" D.I. 45° BEND W/ THRUST BLOCK
9. 4" D.I. CAP W/ THRUST BLOCK
10. MONITOR (SEE D-321 DETAIL C4)

PIPE NOTES

1. ALL MECHANICAL JOINTS (MJ) SHALL BE FURNISHED WITH MEGALUGS.
2. FOR DETAILS OF 66"Ø CONNECTION TO FIRST FLUSH TANK, SEE SHEET S-323.
3. SEE SHEET D-181 FOR FOUL SEWER-DRAIN PIPING CONFIGURATION.
4. SEE SHEET C-105 FOR ADDITIONAL PIPING LAYOUT INFORMATION.
5. PVC WASHWATER FORCEMAIN SHALL BE BURIED WITH A MINIMUM OF 4'-0" OF COVER.
6. SEE SHEET C-105 FOR PLANT WATER ISOLATION VALVE LOCATIONS.

AIR PIPING NOMENCLATURE

1. 12" S.S. TEE
2. 12" x 10" S.S. ECCENTRIC REDUCER
3. 10" S.S. 45° BEND
4. 10" S.S. CAP OR BLIND FLANGE
5. 12" S.S. 90° BEND (2 REQ'D)
6. 10" DIA. S.S. AIR MANIFOLD
7. 12" DIA. S.S. AIR SUPPLY FROM BLOWER BUILDING
8. 12" DIA. DROP PIPE, WALL BRACKET AND ISOLATION VALVE
9. STAINLESS STEEL NON-CLOG AERATION DIFFUSERS - TIDEFLEX TFA-3.00 OR ACCEPTED EQUAL (TYP. OF 108)

AIR PIPING NOTES

1. ALL AIR HEADER PIPE AND FITTINGS SHALL BE STAINLESS STEEL UNLESS OTHERWISE NOTED.
2. AIR HEADER SUPPORTS SPACED 8'-0" APART - SEE SPECS.

CMT

License No. 184-000613

CONSULTANTS

MAY 2015

CSO SATELLITE TREATMENT FACILITY CONTRACT NO. 1

OWNER

MATTOON

MATTOON, ILLINOIS: *Working Together to Build the Future*

CITY OF MATTOON

MATTOON, ILLINOIS

MARK	DATE	DESCRIPTION

PROJECT NO:	12078-03-00
CAD DWG FILE:	120780300-D-121.DWG
DESIGNED BY:	SJB
DRAWN BY:	DLB
CHECKED BY:	SJB
APPROVED BY:	

COPYRIGHT: CRAWFORD, MURPHY & TILLY, INC. 2015

SHEET TITLE

FIRST FLUSH TANK PROCESS PLAN

D-121

SHEET 86 OF 128

Path: J:\Mattoon\12078-03\Draw\Sheets\1-CSO Satellite Treatment\120780300-D-121.dwg
Date: Wednesday, June 17, 2015 11:58:46 AM

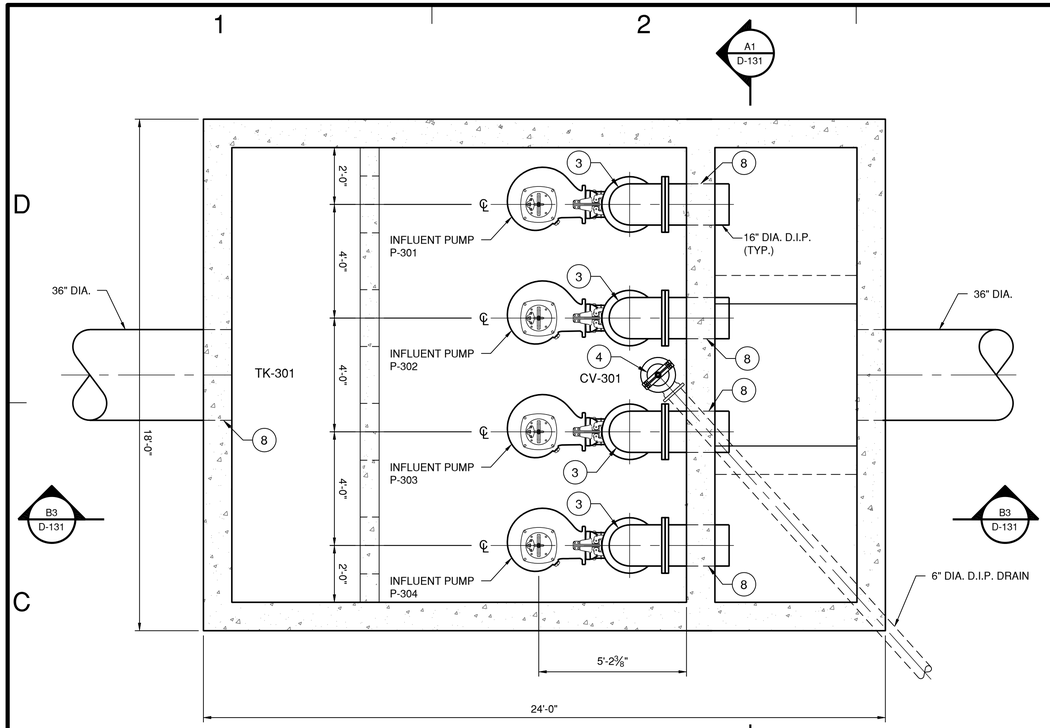

C1 INFLUENT PUMP STATION - PLAN VIEW

3/8"=1'-0"

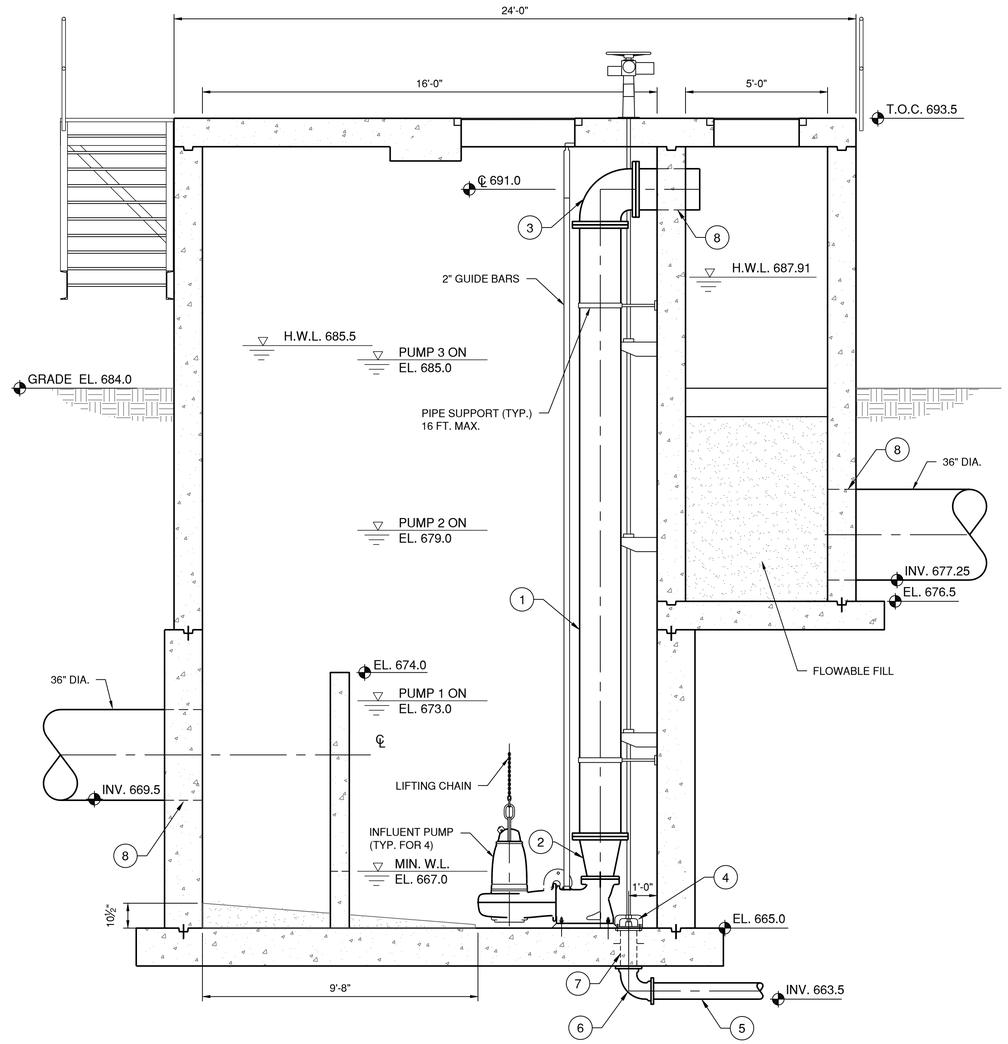

B3 INFLUENT PUMP STATION - SECTION

3/8"=1'-0"

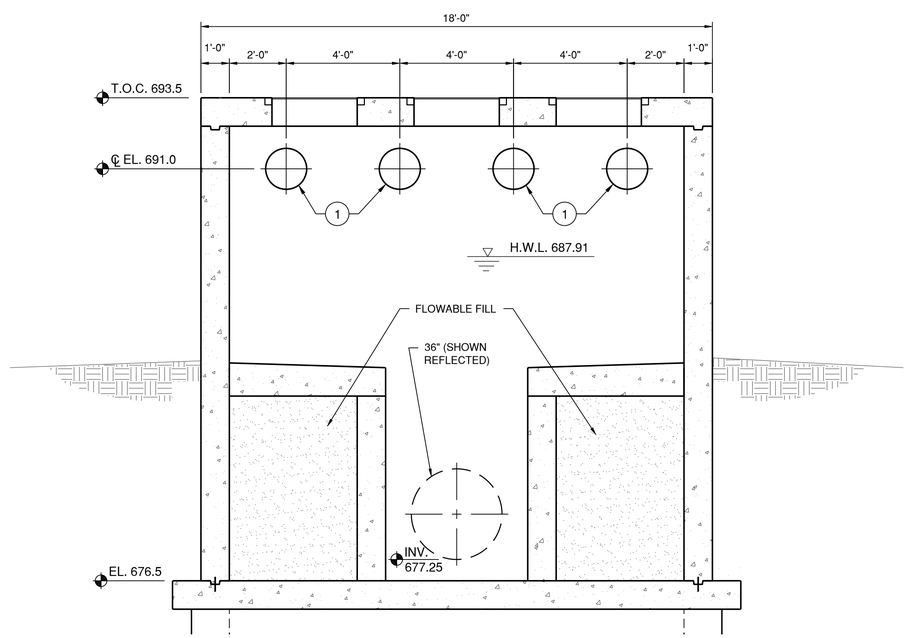

A1 INFLUENT PUMP STATION HEAD BOX - SECTION

3/8"=1'-0"

NOMENCLATURE

1. 16" DIA. FLANGED D.I. PIPE
2. 16"x10" FLANGED D.I. REDUCER
3. 16" DIA. FLANGED D.I. 90° BEND
4. 6" MUD VALVE WITH ELECTRIC ACUATOR
5. 6" DIA. D.I. PIPE
6. 6" DIA. MJ D.I. 90° BEND
7. FLOOR PENETRATION, SEE DETAIL 518
8. WALL PENETRATION SEE DETAILS 519

CMT

License No. 184-000613

CONSULTANTS

MAY 2015

CSO SATELLITE
TREATMENT FACILITY
CONTRACT NO. 1

OWNER

MATTOON

MATTOON, ILLINOIS: *Working Together to Build the Future*

CITY OF MATTOON

MATTOON, ILLINOIS

MARK	DATE	DESCRIPTION

PROJECT NO:	12078-03-00
CAD DWG FILE:	120780300-D-131.DWG
DESIGNED BY:	SG
DRAWN BY:	DLB
CHECKED BY:	SJB
APPROVED BY:	

COPYRIGHT: CRAWFORD, MURPHY & TILLY, INC. 2015

SHEET TITLE

INFLUENT PUMP STATION

D-131

SHEET 87 OF 128

Path: J:\Mattoon\12078-03\Draw\Sheets\1-CSO Satellite Treatment\120780300-D-131.dwg
Date: Wednesday, June 17, 2015 11:59:02 AM

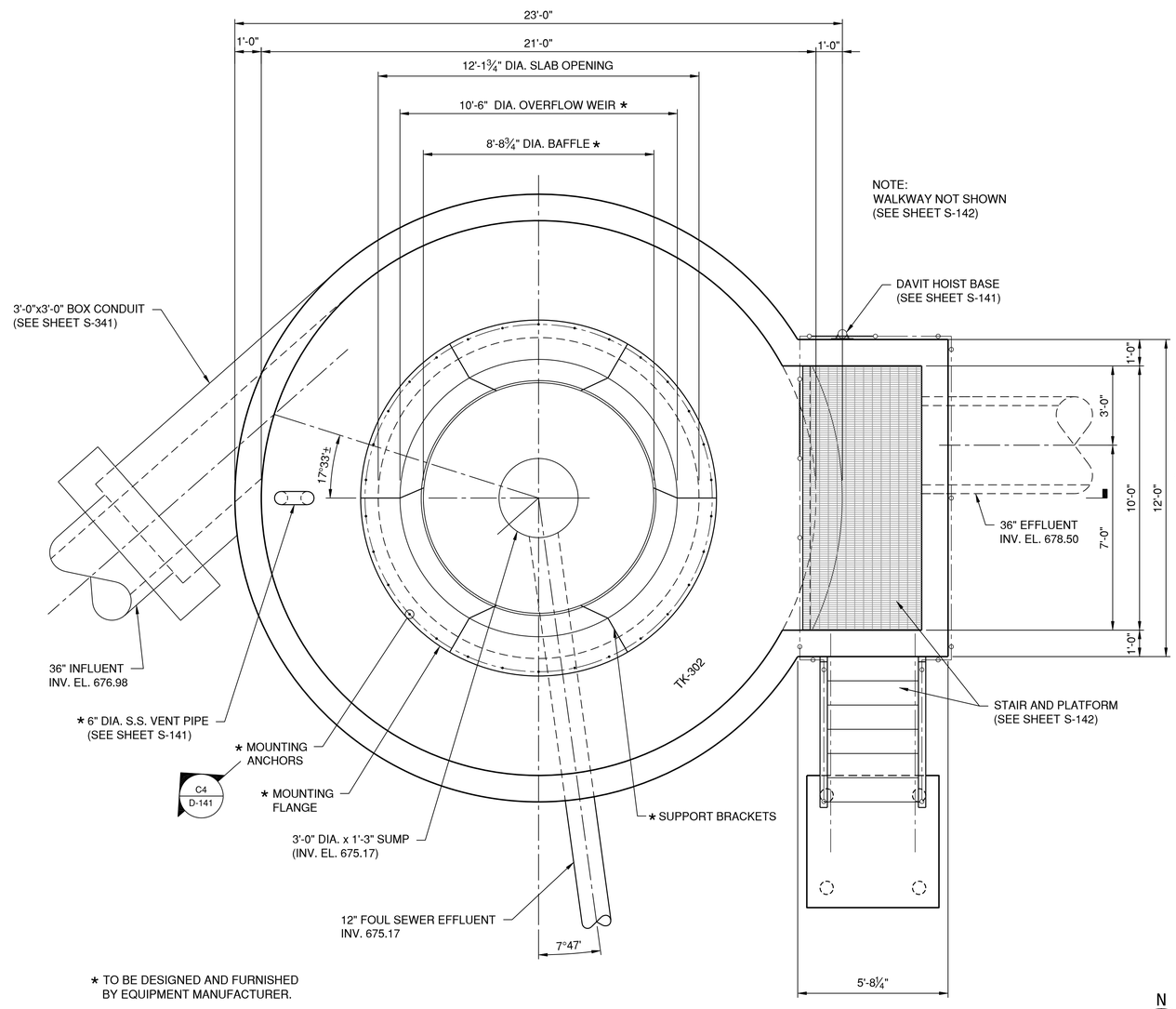

* TO BE DESIGNED AND FURNISHED BY EQUIPMENT MANUFACTURER.

B1 SWIRL CONCENTRATOR PLAN

3/8"=1'-0"

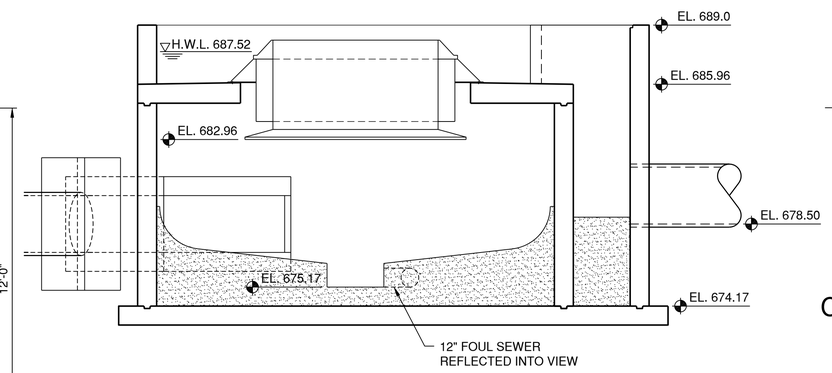

C4 SWIRL CONCENTRATOR SECTION

1/4"=1'-0"

0 2' 4' 8'

CMT

License No. 184-000613

CONSULTANTS

MAY 2015

CSO SATELLITE
TREATMENT FACILITY
CONTRACT NO. 1

OWNER

MATTOON

MATTOON, ILLINOIS: *Working Together to Build the Future*

CITY OF MATTOON

MATTOON, ILLINOIS

MARK	DATE	DESCRIPTION

PROJECT NO:	12078-03-00
CAD DWG FILE:	120780300-D-141.DWG
DESIGNED BY:	SJB/JJF
DRAWN BY:	DLB
CHECKED BY:	SJB
APPROVED BY:	

COPYRIGHT: CRAWFORD, MURPHY & TILLY, INC. 2015

SHEET TITLE

SWIRL CONCENTRATOR PLAN

D-141

SHEET 88 OF 128

Path: J:\Mattoon\12078-03\Draw\Sheets\1-CSO Satellite Treatment\120780300-D-141.dwg
Date: Wednesday, June 17, 2015 11:59:15 AM

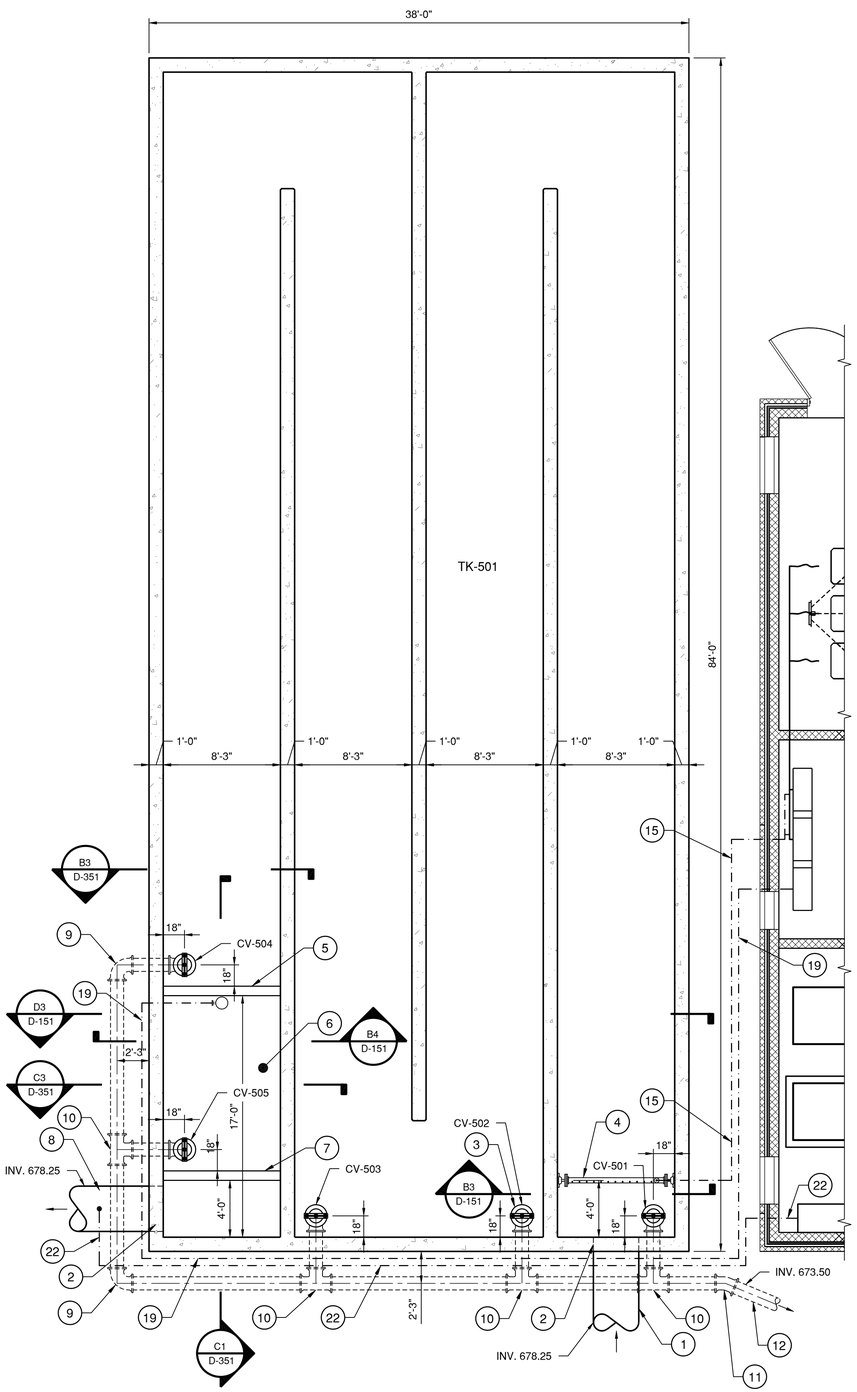

A1 CHLORINE CONTACT TANK - PLAN

3/16"=1'-0"

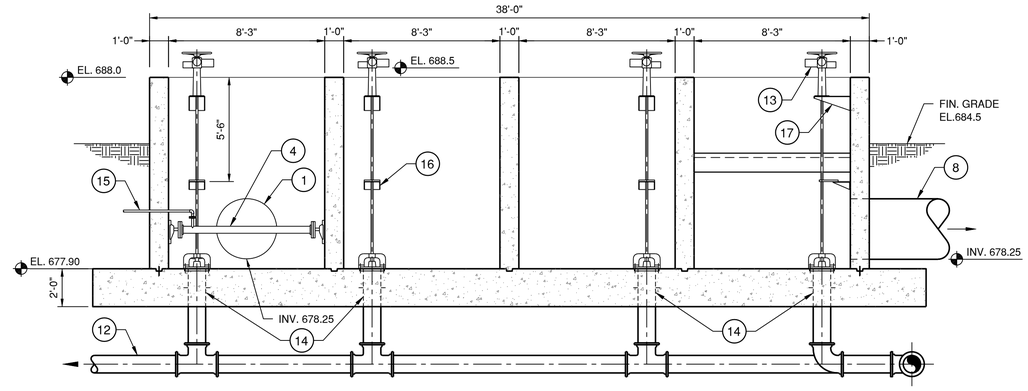

D3 CHLORINE CONTACT TANK - SECTION

1/4"=1'-0"

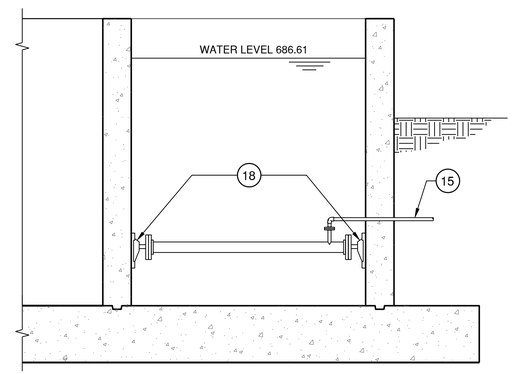

B3 CHLORINE DIFFUSER DETAIL

3/8"=1'-0"

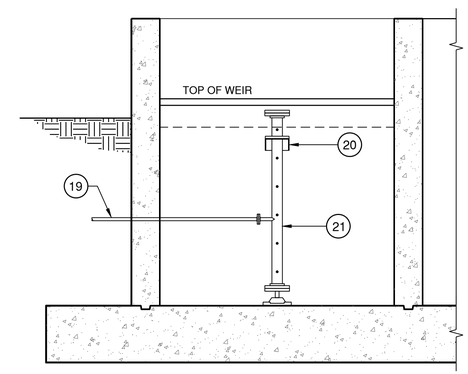

B4 DE-CHLORINATION DIFFUSER DETAIL

3/8"=1'-0"

GENERAL NOTES

1. CHLORINE DIFFUSER SHALL BE RUBBER LINED AND COVERED ORIFICE TYPE. CHLORINE DIFFUSER ORIFICE SHALL BE POINTED UPSTREAM. CHLORINE DIFFUSER SHALL BE INSTALLED AS PER MANUFACTURERS RECOMMENDATION.
2. MUD VALVE STEM GUIDE AND ELECTRIC ACTUATOR FLOOR PEDESTAL SHALL BE INSTALLED AND SUPPORTED AS PER MANUFACTURER'S RECOMMENDATION.
3. CHLORINE SOLUTION FEED LINE SHALL BE RUBBER COVERED BELOW H.W.L.
4. ALL FITTINGS SHALL HAVE MEGALUGS OR EQUAL.
5. SEE SPECIFICATION 11241 FOR MORE INFORMATION ON CHLORINE DIFFUSERS.

NOMENCLATURE

1. 36" DIA D.I.P INFLUENT FROM SWIRL CONCENTRATOR
2. WALL PENETRATION, SEE DETAILS 519
3. 10" MUD VALVE WITH ELECTRIC ACTUATOR, TYP. OF 5
4. CHLORINE DIFFUSER, SEE DETAILS THIS SHEET. SEE NOTE 1
5. DECHLORINATION CHAMBER WEIR
6. DECHLORINATION CHAMBER
7. EFFLUENT WEIR
8. 36" DIA D.I.P EFFLUENT TO RILEY CREEK
9. 10" DIA MJ D.I. 90° BEND
10. 10" DIA MJ D.I. TEE
11. 10" DIA MJ D.I 22½° BEND
12. 10" DIA D.I.P DRAIN LINE TO FOUL SEWER PUMP STATION. SEE C-105 FOR CONTINUATION AND ELEVATIONS.
13. ELECTRIC ACTUATOR WITH HAND WHEEL, TYP. OF 5. SEE NOTE 2
14. FLOOR PENETRATION, SEE DETAILS 518 (TYPICAL)
15. 1" SCH. 80 PVC CHLORINE SOLUTION FEED LINE, SEE NOTE 3. SLOPE PIPE TO DIFFUSER.
16. MUD VALVE STEM SUPPORT
17. ELECTRIC ACTUATOR FLOOR PEDESTAL WALL BRACKET, TYP. OF 5
18. DIFFUSER SUPPORT BRACKET
19. 1" SCH. 80 PVC BISULFITE SOLUTION PIPE
20. PIPE SUPPORT
21. DIFFUSER, HOLES POINTING DOWN STREAM
22. SAMPLE LINE. ½" SCH. 80 PVC.

CMT

License No. 184-000613

CONSULTANTS

MAY 2015

CSO SATELLITE TREATMENT FACILITY CONTRACT NO. 1

OWNER

MATTOON

MATTOON, ILLINOIS: *Working Together to Build the Future*

CITY OF MATTOON

MATTOON, ILLINOIS

MARK	DATE	DESCRIPTION

PROJECT NO:	12078-03-00
CAD DWG FILE:	120780300-D-151.DWG
DESIGNED BY:	RD
DRAWN BY:	DLB
CHECKED BY:	SJB
APPROVED BY:	

COPYRIGHT: CRAWFORD, MURPHY & TILLY, INC. 2015

SHEET TITLE

CHLORINE CONTACT TANK AND DETAILS

D-151

SHEET 89 OF 128

Path: J:\Mattoon\12078-03\Draw\Sheets\1-CSO Satellite Treatment\120780300-D-151.dwg
Date: Wednesday, June 17, 2015 11:59:30 AM

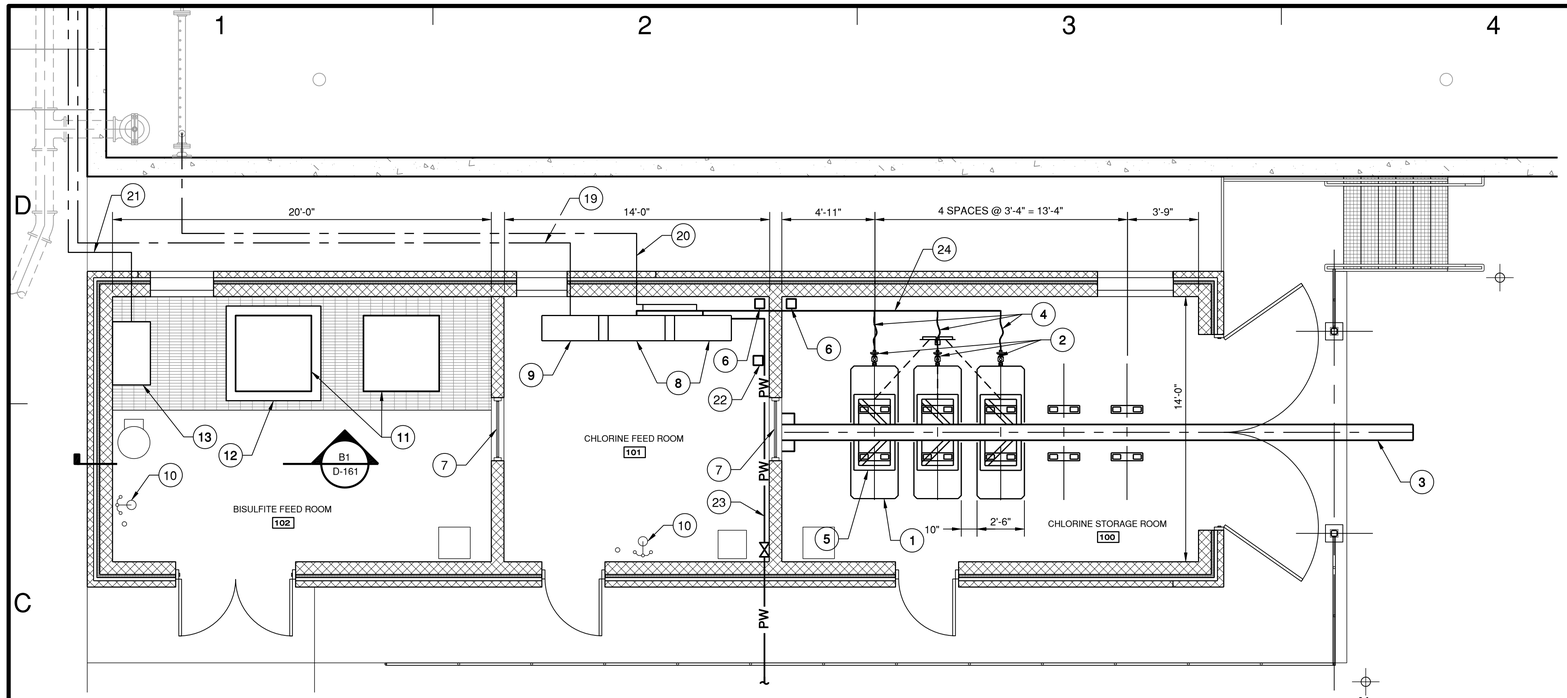

C1 CHEMICAL FEED BUILDING - PLAN VIEW

1/4"=1'-0"

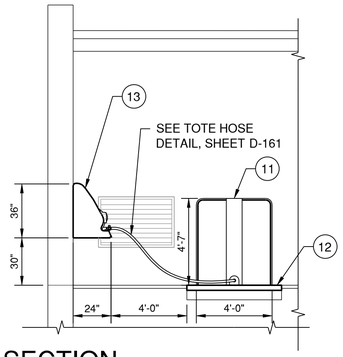

B1 SECTION

1/4"=1'-0"

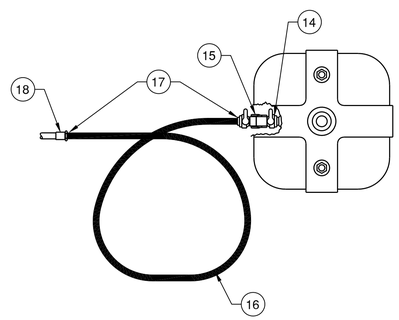

B2 TOTE HOSE DETAIL

1/2"=1'-0"

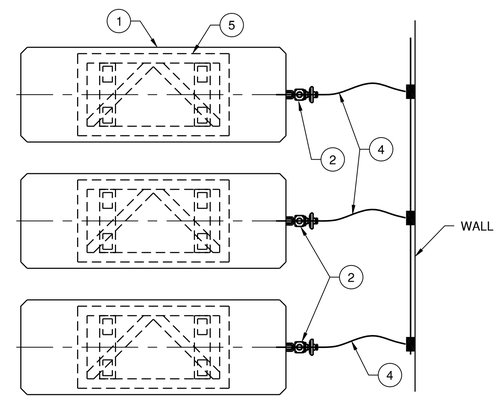

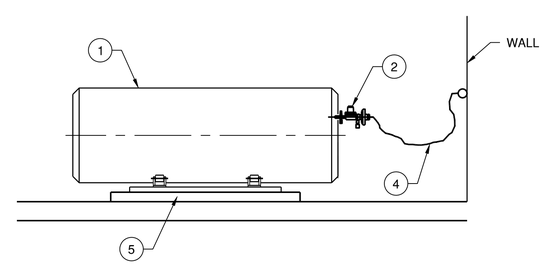

A3 CHLORINE CONTAINER DETAIL

N.T.S.

NOMENCLATURE

1. CHLORINE TON CONTAINER (BY OWNER'S CHEMICAL SUPPLIER)
2. VACUUM REGULATOR MOUNTED TO TON CONTAINERS
3. TROLLEY BEAM, SEE STRUCTURAL DRAWINGS
4. ½" POLYETHYLENE TUBING, SEE SPEC 11241
5. CHLORINE TON CONTAINER SCALES, TYP. OF 3 UNITS
6. CHLORINE LEAK DETECTOR (A-601)
7. VISION PANEL
8. CHLORINATOR PANEL, SEE NOTE 4 (U-601, 602)
9. RESIDUAL CHLORINE ANALYZER WITH SAMPLE PUMP (U-603)
10. EMERGENCY SHOWER AND EYEWASH STATION
11. 330 GALLON IBC TOTES (ONE IS STAND BY). SEE TOTE HOSE DETAILS THIS SHEET
12. TOTE SCALE
13. WALL MOUNTED, DUPLEX METERING, CHEMICAL FEED PUMP SKID (P-601,602)
14. DRY BREAK VALVE OR VALVE WITH CAM-LEVER CONNECTION AT TOTE. SEE NOTE 8
15. DRY BREAK VALVE OR VALVE WITH CAM-LEVER COUPLING TO MATE WITH TOTE CONNECTION. SEE NOTE 8
16. 1½" SUCTION HOSE. SEE NOTE 9
17. HOSE BARB CONNECTION WITH TWO STAINLESS STEEL T-BOLT HOSE CLAMPS
18. 1½" SCHEDULE 80 PVC ADAPTER
19. SAMPLE LINE, SEE D-151.
20. TO CHLORINE DIFFUSER, SEE D-151.
21. TO DE-CHLORINATION DIFFUSER, SEE D-151.
22. VACUUM SWITCH ALARM (U-604)
23. 4" DIAMETER PLANT WATER TO CHLORINATOR PANEL. SEE DETAIL 518.
24. ¾" PVC SCH. 80

NOTES

1. VALVES AND FITTINGS SHALL BE SIZED TO MATCH ADJACENT PIPES.
2. CONTRACTOR SHALL BE RESPONSIBLE FOR PROVIDING A COMPLETE AND OPERATIONAL CHEMICAL FEED SYSTEM. ALL NECESSARY COMPONENTS MAY NOT BE SHOWN ON THIS SHEET.
3. RUN SEPARATE GAS VENT LINES FROM EACH VACUUM REGULATOR TO BUILDING EXTERIOR. SLOPE THE VENT LINES DOWNWARD FROM VACUUM REGULATOR TO PROVIDE A POSITIVE DRAIN TO PREVENT ACCUMULATION OF ANY MOISTURE.
4. CHLORINATORS ARE WALL MOUNTED UNITS. SHOWN AWAY FROM WALL TO ILLUSTRATE PIPING HEADER.
5. COORDINATE THIS SHEET WITH SHEETS D-151, AND D-661 FOR REQUIREMENTS ASSOCIATED WITH CHEMICAL FEED PIPING, FITTINGS, VALVES, EQUIPMENTS, ETC.
6. ALL PVC PIPING AND FITTINGS SHALL BE SCHEDULE 80 UNLESS NOTED OTHERWISE
7. CHLORINE GAS TUBING SHALL BE POLYETHYLENE
8. COORDINATE WITH OWNERS CHEMICAL SUPPLIER FOR CONNECTION REQUIREMENTS
9. 12" MINIMUM BENDING RADIUS. 10' MINIMUM LENGTH. COORDINATE PIPE LENGTH AND FITTING LAYOUT WITH TOTE AND EQUIPMENT LAYOUT.
10. GAS DETECTION SENSOR SHALL BE LOCATED WITHIN 6 INCHES A.F.F.
11. ROUTE VENT PIPE BACK TO (NORTH) SIDE OF BUILDING.
12. VACUUM TUBING FROM REGULATOR TO CHLORINATOR SHALL BE INSTALLED IN 1-5" SCH. 80 PVC CONDUIT.

CMT

License No. 184-000613

CONSULTANTS

MAY 2015

CSO SATELLITE TREATMENT FACILITY CONTRACT NO. 1

OWNER

MATTOON

MATTOON, ILLINOIS: *Working Together to Build the Future*

CITY OF MATTOON

MATTOON, ILLINOIS

MARK	DATE	DESCRIPTION

PROJECT NO:	12078-03-00
CAD DWG FILE:	120780300-D-161.DWG
DESIGNED BY:	RD
DRAWN BY:	DLB
CHECKED BY:	SJB
APPROVED BY:	

COPYRIGHT: CRAWFORD, MURPHY & TILLY, INC. 2015

SHEET TITLE

CHEMICAL FEED BUILDING

D-161

SHEET 90 OF 128

Path: J:\Mattoon\12078-03\Draw\Sheets\1-CSO Satellite Treatment\120780300-D-161.dwg
Date: Wednesday, June 17, 2015 11:59:47 AM

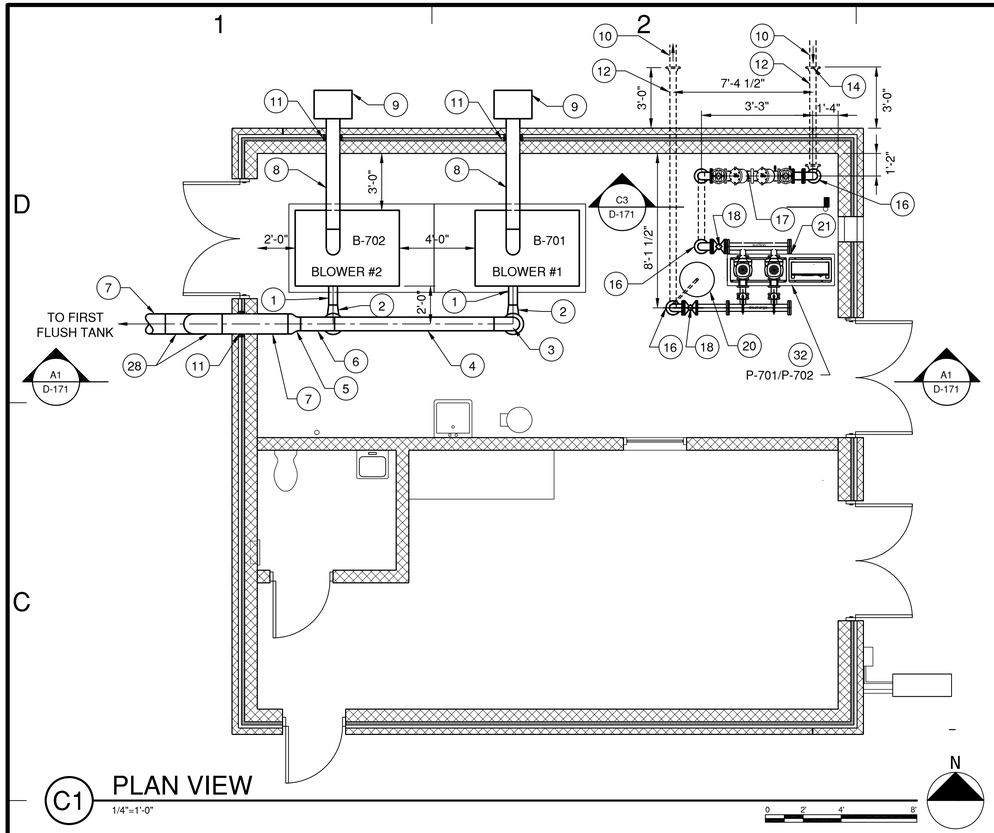

C1 PLAN VIEW
1/4"=1'-0"

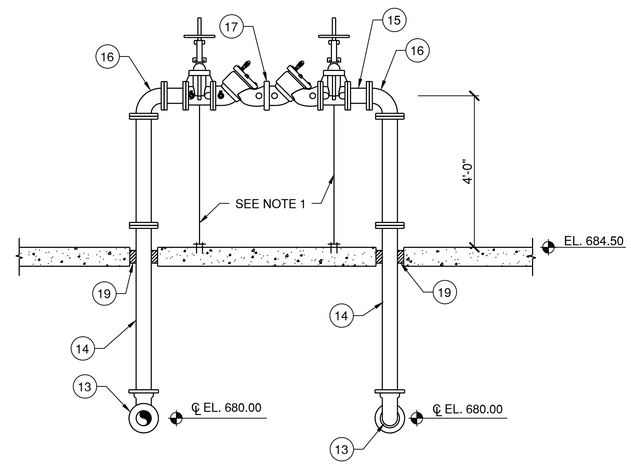

C3 SECTION
1/2"=1'-0"

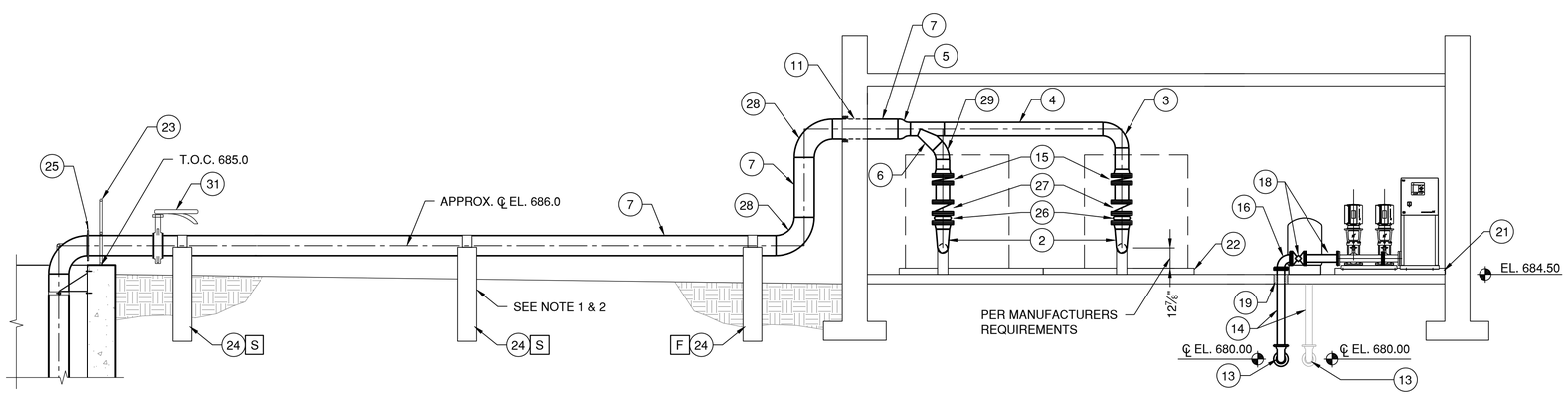

A1 SECTION
1/4"=1'-0"

NOMENCLATURE

1. 5" STAINLESS STEEL BLOWER DISCHARGE
2. 5" X 8" STAINLESS STEEL INCREASING ELBOW
3. 8" STAINLESS STEEL 90° BEND
4. 8" STAINLESS STEEL PIPE
5. 8" X 12" STAINLESS STEEL INCREASER
6. 8" X 8" X 8" STAINLESS STEEL WYE
7. 12" STAINLESS STEEL PIPE TO FIRST FLUSH TANK
8. 8" STAINLESS STEEL INLET PIPE
9. INLET FILTER ASSY. W/ SUPPORT
10. 4" DIP
11. WALL PENETRATION, A3-P-161
12. 4" D.I. M.J. X M.J.
13. 4" M.J. BEND D.I. 90 ° BEND W/ THRUST BLOCK
14. 4" D.I. FL X M.J.
15. 8" DIA. BUTTERFLY VALVE
16. 4" D.I. FL X FL 90° BEND
17. 4" FL X FL RPZ VALVE. SEE SHEET P171.
18. 4" DIA. PLUG VALVE
19. FLOOR PENETRATION, SEE DETAIL 518
20. PRESSURE TANK W/ BASE, 44 GALLONS
21. 6" PCC PUMP PAD
22. 6" PCC PUMP PAD
23. HANDRAIL - TRIM KICK PLATE AT AIR PIPE
24. HORIZONTAL CONCRETE PIPE SUPPORTS (MIN. OF 3) SEE NOTE 1 AND SHEET D-502.
25. 12" DIA. FLANGE ASSEMBLY KIT
26. 8" DIA. FLANGED EXPANSION JOINT
27. 8" DIA. CHECK VALVE
28. 12" STAINLESS STEEL 90° BEND
29. 8" STAINLESS STEEL 45° BEND
30. 4" D.I. FLANGED SPOOL
31. 12" BUTTERFLY VALVE
32. PLANT WATER BOOSTER PUMP SKID

GENERAL NOTES

1. THE AIR PIPE SUPPORTS SHALL BE THE CONCRETE SADDLE TYPE. THE SUPPORTS SHALL BE EQUALLY SPACED. F - DENOTES A FIXED SUPPORT; S - INDICATES A SLIDING SUPPORT SEE SHEET D-502 FOR DETAILS.
2. AIR PIPING SHALL BE INSULATED FROM BLOWERS TO FLANGE ASSEMBLY KIT WITH TYPE PI INSULATION WITH METAL JACKET. SEE SPECS FOR DETAILS.
3. CONTRACTOR TO COORDINATE BOOSTER PUMP INLET/OUTLET FLOOR PENETRATIONS W/ BOOSTER PUMP MFG.

CMT

License No. 184-000613

CONSULTANTS

MAY 2015

CSO SATELLITE TREATMENT FACILITY CONTRACT NO. 1

OWNER

MATTOON

MATTOON, ILLINOIS: *Working Together to Build the Future*

CITY OF MATTOON

MATTOON, ILLINOIS

MARK	DATE	DESCRIPTION

PROJECT NO:	12078-03-00
CAD DWG FILE:	120780300-D-171.DWG
DESIGNED BY:	TRG
DRAWN BY:	DLB
CHECKED BY:	SJB
APPROVED BY:	

COPYRIGHT: CRAWFORD, MURPHY & TILLY, INC. 2015

SHEET TITLE

BLOWER AND ELECTRICAL BUILDING PLAN

D-171

SHEET 91 OF 128

Path: J:\Mattoon\12078-03\Draw\Sheets\1-CSO Satellite Treatment\120780300-D-171.dwg
Date: Wednesday, June 17, 2015 12:00:01 PM

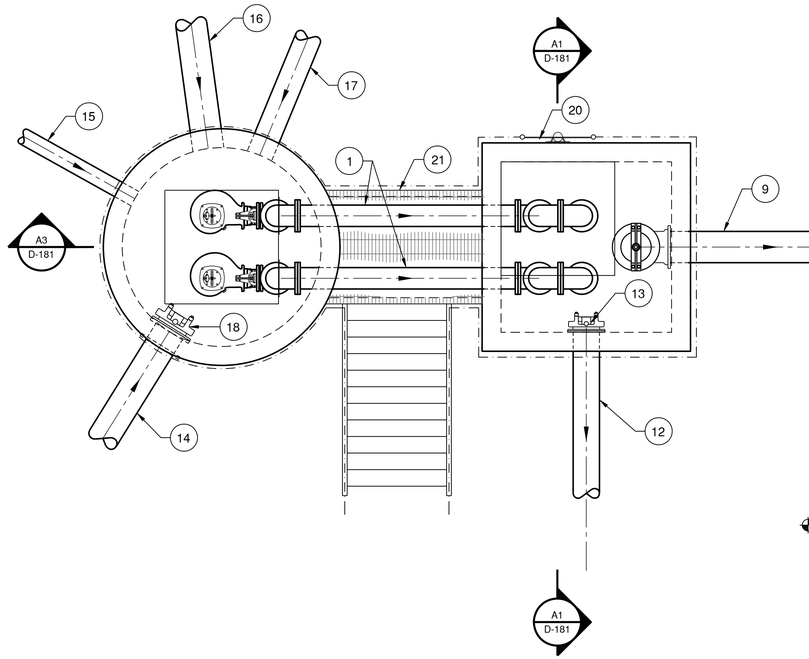

C1 FOUL SEWER-DRAIN PUMP STATION - PLAN
3/8"=1'-0"

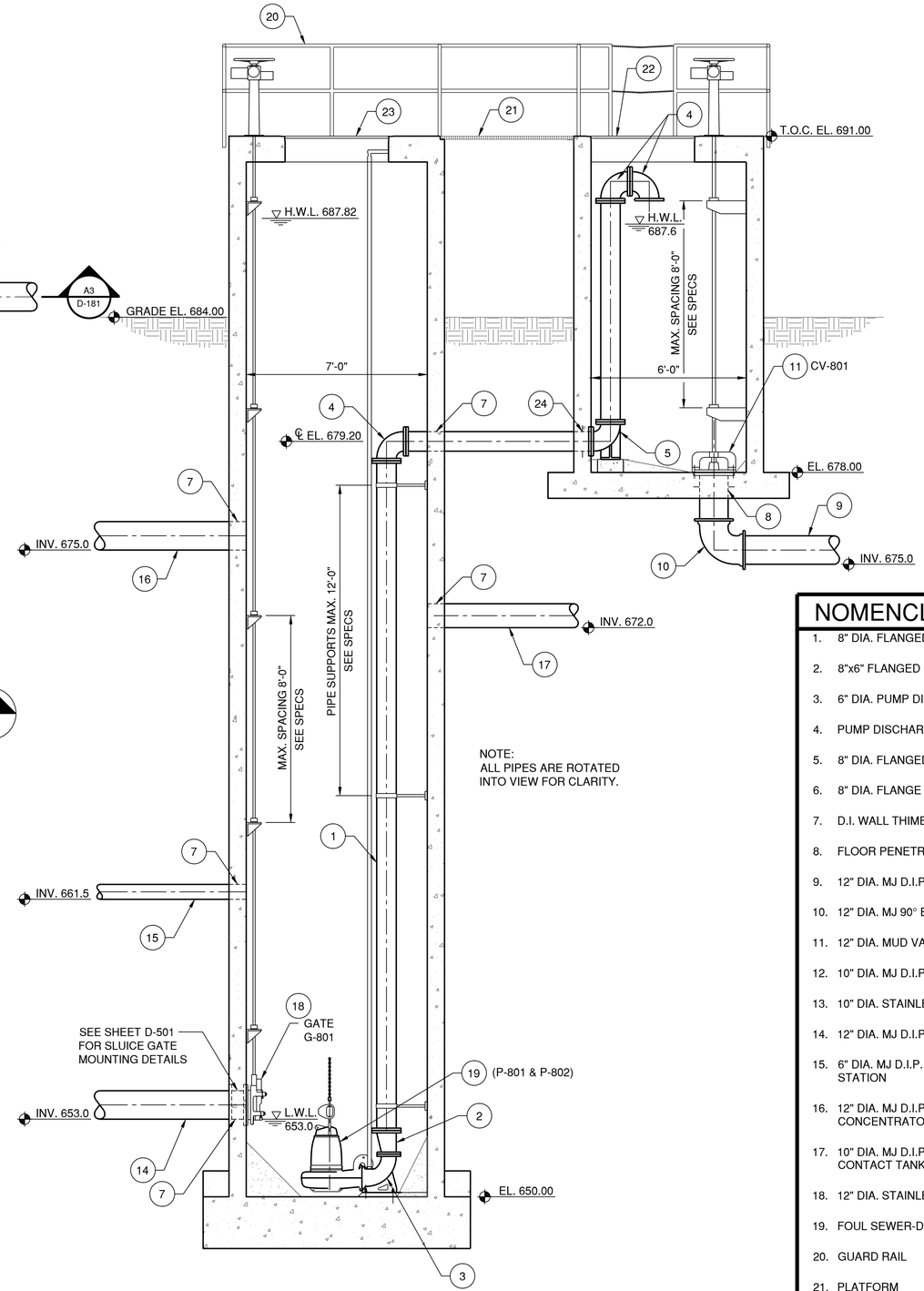

NOTE:
ALL PIPES ARE ROTATED
INTO VIEW FOR CLARITY.

A3 FOUL SEWER-DRAIN PUMP STATION - SECTION
3/8"=1'-0"

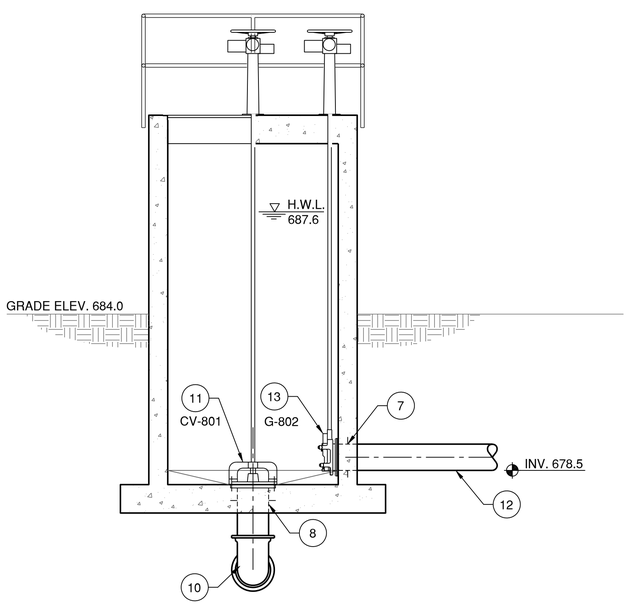

A1 FOUL SEWER-DRAIN PUMP STATION - SECTION
3/8"=1'-0"

NOMENCLATURE

1. 8" DIA. FLANGED D.I.P.
2. 8"x6" FLANGED REDUCER
3. 6" DIA. PUMP DISCHARGE ELBOW
4. PUMP DISCHARGE ELBOW
5. 8" DIA. FLANGED 90° BASE ELBOW
6. 8" DIA. FLANGE
7. D.I. WALL THIMBLE - SEE D-501
8. FLOOR PENETRATION, SEE DETAIL 518
9. 12" DIA. MJ D.I.P. DRAIN LINE TO EXISTING RCPS
10. 12" DIA. MJ 90° BEND
11. 12" DIA. MUD VALVE WITH ELECTRIC ACTUATOR
12. 10" DIA. MJ D.I.P. TO FIRST FLUSH TANK
13. 10" DIA. STAINLESS STEEL SLUICE GATE
14. 12" DIA. MJ D.I.P. DRAIN FROM FIRST FLUSH TANK
15. 6" DIA. MJ D.I.P. DRAIN LINE FROM INFLUENT PUMP STATION
16. 12" DIA. MJ D.I.P. DRAIN LINE FROM SWIRL CONCENTRATOR
17. 10" DIA. MJ D.I.P. DRAIN LINE FROM CHLORINE CONTACT TANK
18. 12" DIA. STAINLESS STEEL SLUICE GATE
19. FOUL SEWER-DRAIN PUMP (TYP. OF 2)
20. GUARD RAIL
21. PLATFORM
22. 4'x4' ACCESS HATCH
23. 4'x4' ACCESS HATCH
24. WALL PIPE, DETAIL 510

CMT
License No. 184-000613
CONSULTANTS

MAY 2015

CSO SATELLITE
TREATMENT FACILITY
CONTRACT NO. 1

OWNER
MATTOON
MATTOON, ILLINOIS: *Working Together to Build the Future*

CITY OF MATTOON

MATTOON, ILLINOIS

MARK	DATE	DESCRIPTION

PROJECT NO:	12078-03-00
CAD DWG FILE:	120780300-D-181.DWG
DESIGNED BY:	SJB
DRAWN BY:	DLB
CHECKED BY:	SJB
APPROVED BY:	

COPYRIGHT: CRAWFORD, MURPHY & TILLY, INC. 2015

SHEET TITLE
FOUL SEWER-DRAIN
PUMP STATION

D-181
SHEET 92 OF 128

Path: J:\Mattoon\12078-03\Draw\Sheets\1-CSO Satellite Treatment\120780300-D-181.dwg
Date: Wednesday, June 17, 2015 12:00:16 PM

NOMENCLATURE

1. DRIVE UNIT
2. HEADSHAFT BEARING
3. SPROCKETS
4. WIPER
5. 60 IN. DIAMETER GFRPM OVERFLOW PIPE
6. CARRYING CHAIN
7. RETURN RAILS BY SCREEN MANUFACTURER
8. ANCHOR BOLTS ¾" DIA. x 7"L, 316 S.S.

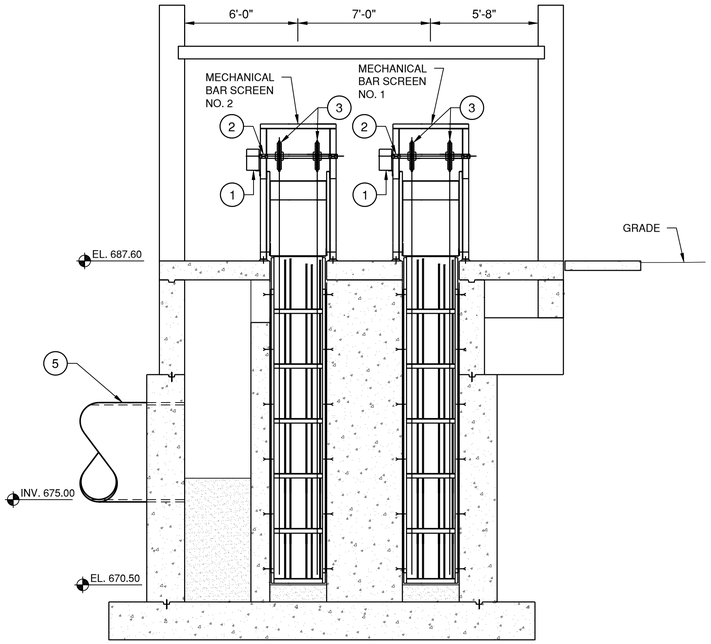

C1 SECTIONS
1/4"=1'-0"

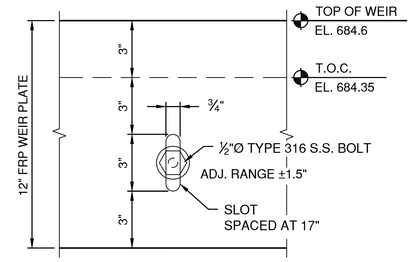

C5 WEIR PLATE DETAIL
3"=1'-0"

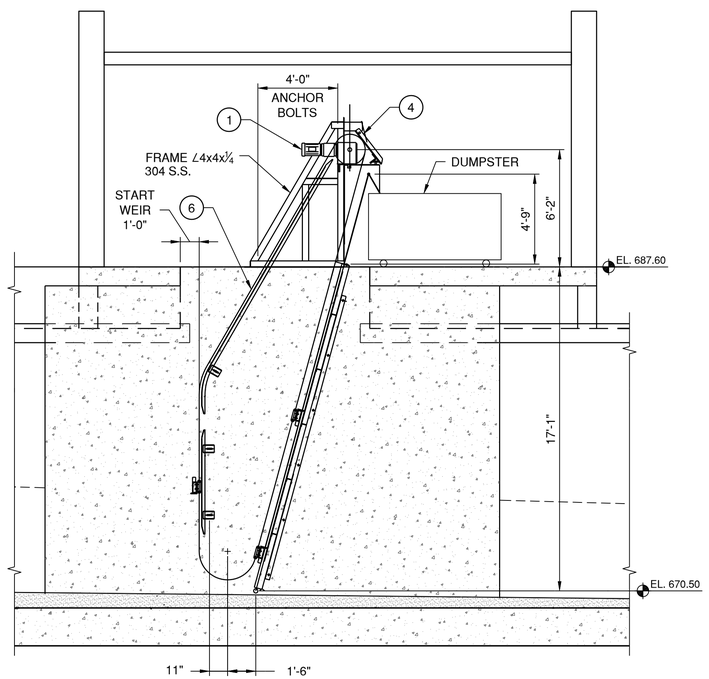

A1 SECTIONS
1/4"=1'-0"

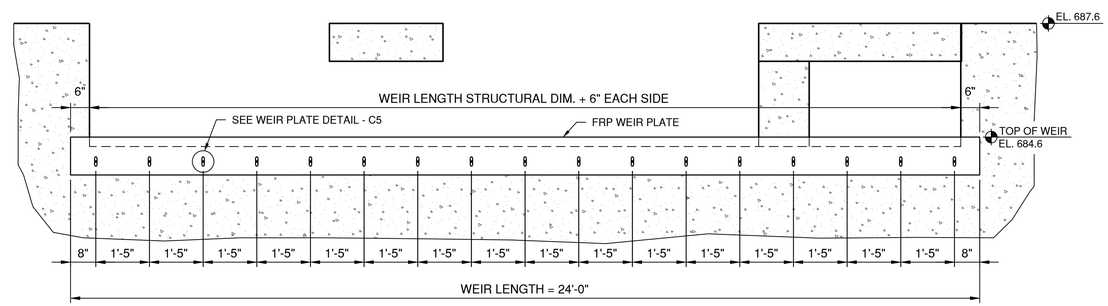

B3 SCREEN STRUCTURE - WEST WEIR - SECTION
1/2"=1'-0"

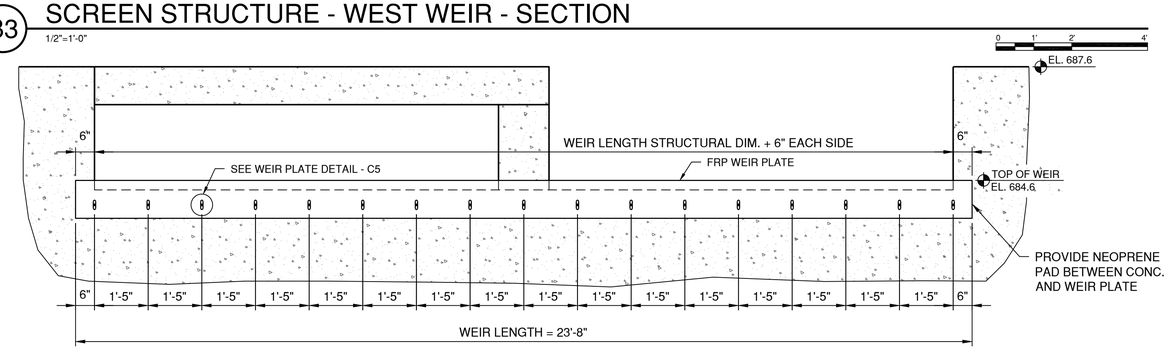

A3 SCREEN STRUCTURE - EAST WEIR - SECTION
1/2"=1'-0"

CMT

License No. 184-000613

CONSULTANTS

MAY 2015

CSO SATELLITE TREATMENT FACILITY CONTRACT NO. 1

OWNER

MATTOON
MATTOON, ILLINOIS: *Working Together to Build the Future*

CITY OF MATTOON

MATTOON, ILLINOIS

MARK	DATE	DESCRIPTION

PROJECT NO:	12078-03-00
CAD DWG FILE:	120780300-D-311.DWG
DESIGNED BY:	SG
DRAWN BY:	DLB
CHECKED BY:	SJB
APPROVED BY:	
COPYRIGHT:	CRAWFORD, MURPHY & TILLY, INC. 2015

SHEET TITLE

SCREEN BUILDING SECTIONS AND DETAILS

D-311

SHEET 93 OF 128

Path: J:\Mattoon\12078-03\Draw\Sheets\1-CSO Satellite Treatment\120780300-D-311.dwg
Date: Wednesday, June 17, 2015 12:00:32 PM

GENERAL NOTES

1. ALL PIPING AND EQUIPMENT IN THIS VIEW HAS BEEN ROTATED INTO VIEW FOR CLARITY, FOR TRUE ORIENTATION AND LOCATION SEE PLAN SHEET D-121.
2. AIR PIPING SHALL HAVE A MINIMUM SUBMERGENCE ON 0'-11" AT THE POINT FARTHEST FROM CENTERLINE OF THE TANK. THE CENTERLINE ELEVATION OF THE HEADER SHALL REMAIN CONSTANT AT APPROXIMATELY 659.87. SUBMERGENCE WILL VARY WITH THE SLOPE OF THE FLOOR.
3. FINAL ELEVATION OF THE MIXERS SHALL BE DETERMINED BY THE MANUFACTURER.
4. SEE STRUCTURAL SHEET SHEETS FOR HANDRAIL CHAIN OPENINGS AT MIXER AND MONITOR LOCATIONS

NOMENCLATURE

1. 12" S.S. AIR HEADER FROM BLOWER BUILDING WITH STRUCTURAL SUPPORTS.
2. 12" BUTTERFLY VALVE
3. 12" FLANGE ASSEMBLY KIT
4. LIFTING LOOP
5. 12" S.S. DROP PIPE WALL BRACKET ASSEMBLY
6. 10" S.S. AIR HEADER
7. HORIZONTAL PIPE SUPPORT ASSEMBLY - HEIGHT VARIES
8. 12" MJ D.I.P. DRAIN LINE TO FOUL SEWER PUMP STATION
9. 12" THERMAL EXPANSION COUPLING
10. 10" D.I.P. FOUL SEWER PIPE FROM FOUL SEWER PUMP STATION
11. WALL PENETRATION, SEE DETAIL 519
12. NOZZLE TIP
13. STREAM SHAPER
14. ELKHART BRASS, MODEL #8492 SIDEWINDER MONITOR
15. 2" QUICK DISCONNECT ADAPTER
16. 2" BRASS BALL VALVE
17. AIR RELIEF VALVE
18. 2" SCHED. 80 HOT DIPPED GALVANIZED
19. VALVE BOX
20. 4"x2" PVC REDUCER
21. 4" DIP
22. 2" GATE VALVE
23. CRUSHED ROCK
24. THRUST BLOCK
25. WASHDOWN HYDRANT W/ LOCKING CAP

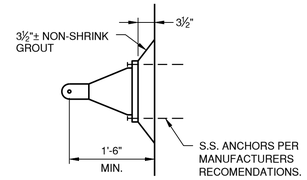

D3 MIXER MAST SUPPORT DETAIL
N.T.S.

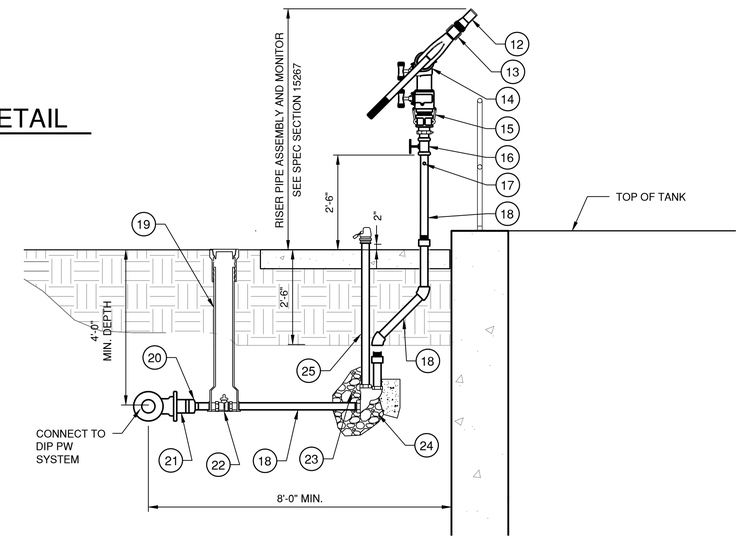

C4 MONITOR DETAIL
1/2"=1'-0"

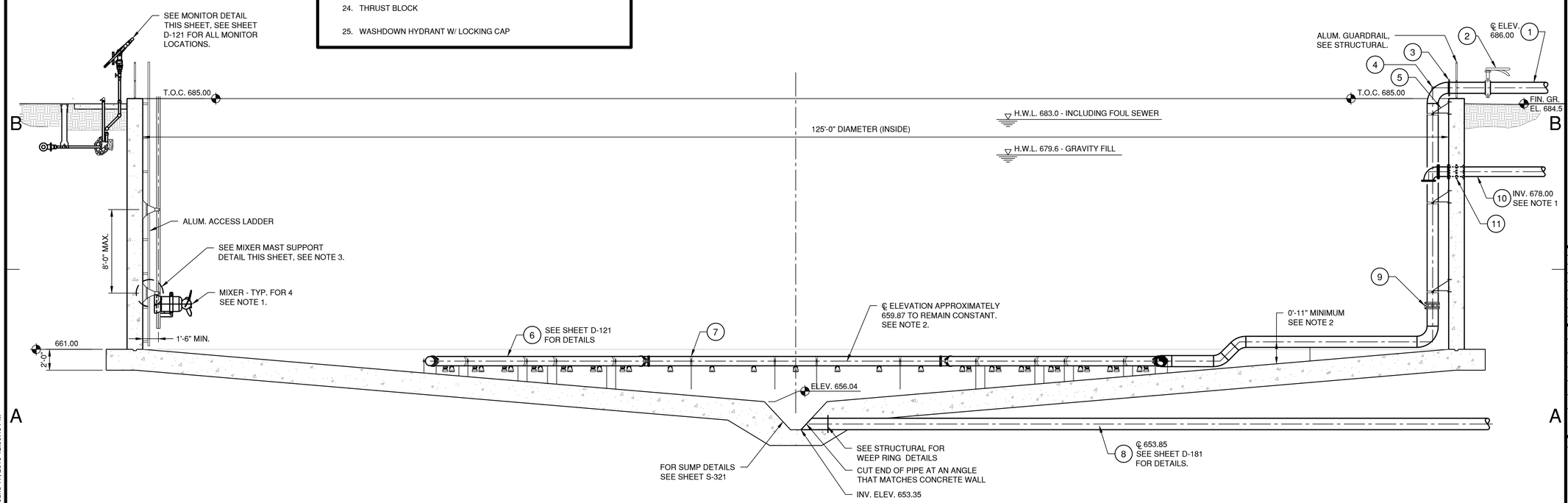

A1 FIRST FLUSH TANK - SECTION
3/16"=1'-0"

CMT

License No. 184-000613

CONSULTANTS

MAY 2015

CSO SATELLITE TREATMENT FACILITY CONTRACT NO. 1

OWNER

MATTOON
MATTOON, ILLINOIS: *Working Together to Build the Future*

CITY OF MATTOON

MATTOON, ILLINOIS

MARK	DATE	DESCRIPTION

PROJECT NO:	12078-03-00
CAD DWG FILE:	120780300-D-321.DWG
DESIGNED BY:	SJB
DRAWN BY:	DLB
CHECKED BY:	SJB
APPROVED BY:	

COPYRIGHT: CRAWFORD, MURPHY & TILLY, INC. 2015

SHEET TITLE

FIRST FLUSH TANK SECTION AND DETAILS

D-321

Path: J:\Mattoon\12078-03\Draw\Sheets\1-CSO Satellite Treatment\120780300-D-321.dwg
Date: Wednesday, June 17, 2015 12:00:49 PM

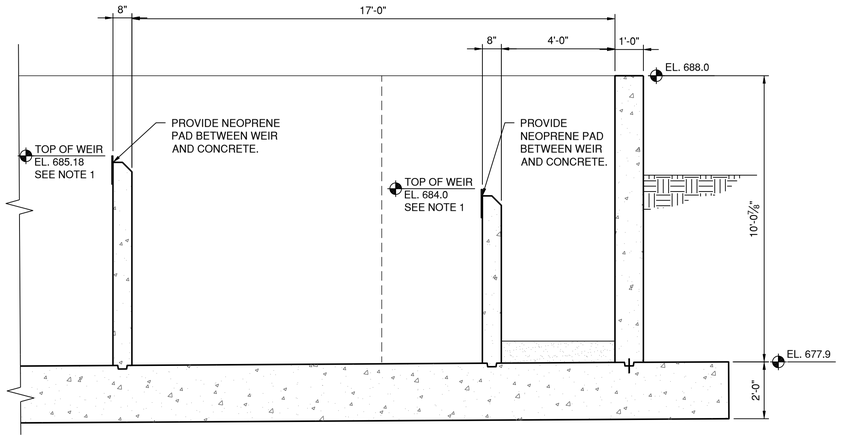

C1 CHLORINE CONTACT TANK - SECTION
3/8"=1'-0"

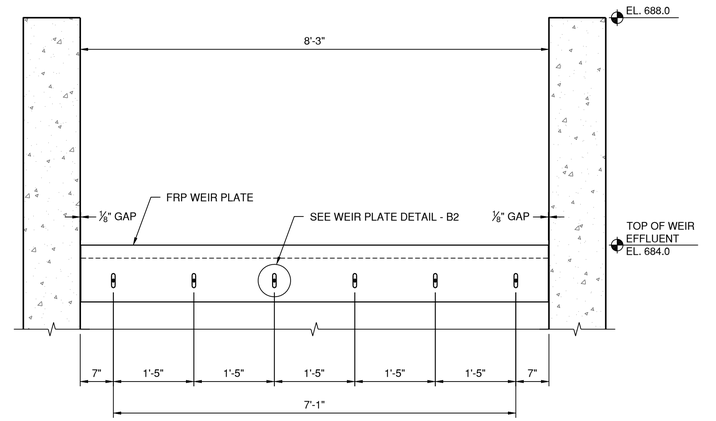

C3 CHLORINE CONTACT TANK - SECTION
3/4"=1'-0"

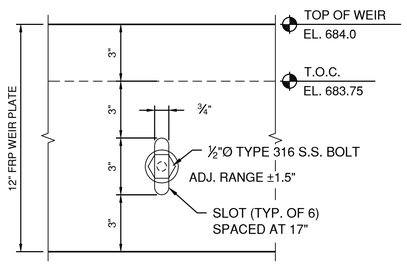

B2 WEIR PLATE DETAIL
3"=1'-0"

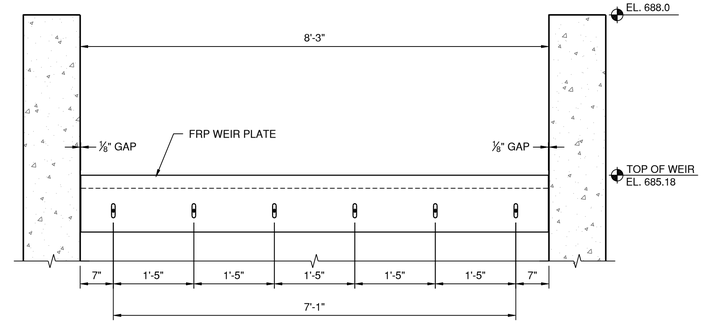

B3 CHLORINE CONTACT TANK - SECTION
3/4"=1'-0"

NOTES

1. ADD NEOPRENE PAD BETWEEN WEIR PLATE AND CONCRETE TO PROVIDE SEAL.

CMT

License No. 184-000613

CONSULTANTS

MAY 2015

CSO SATELLITE TREATMENT FACILITY CONTRACT NO. 1

OWNER

MATTOON

MATTOON, ILLINOIS: *Working Together to Build the Future*

CITY OF MATTOON

MATTOON, ILLINOIS

MARK	DATE	DESCRIPTION

PROJECT NO:	12078-03-00
CAD DWG FILE:	120780300-D-351.DWG
DESIGNED BY:	RD
DRAWN BY:	DLB
CHECKED BY:	SJB
APPROVED BY:	
COPYRIGHT:	CRAWFORD, MURPHY & TILLY, INC. 2015

SHEET TITLE

CHLORINE CONTACT SECTIONS

D-351

SHEET 95 OF 128

Path: J:\Mattoon\12078-03\Draw\Sheets\1-CSO Satellite Treatment\120780300-D-351.dwg
Date: Wednesday, June 17, 2015 12:01:01 PM

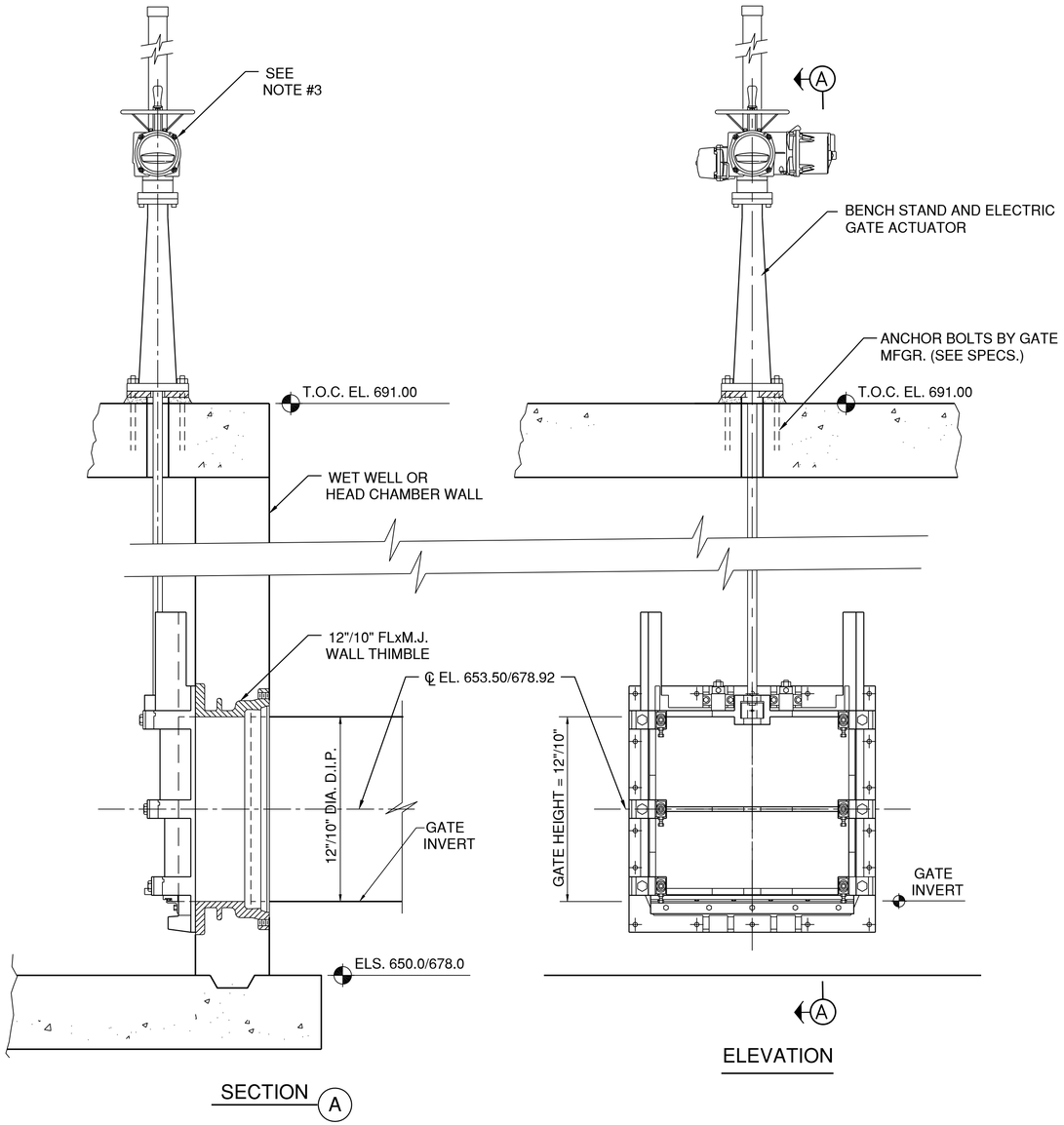

B1 G-801 & G-802 SURFACE MOUNTED SLIDE GATE DETAILS

N.T.S.

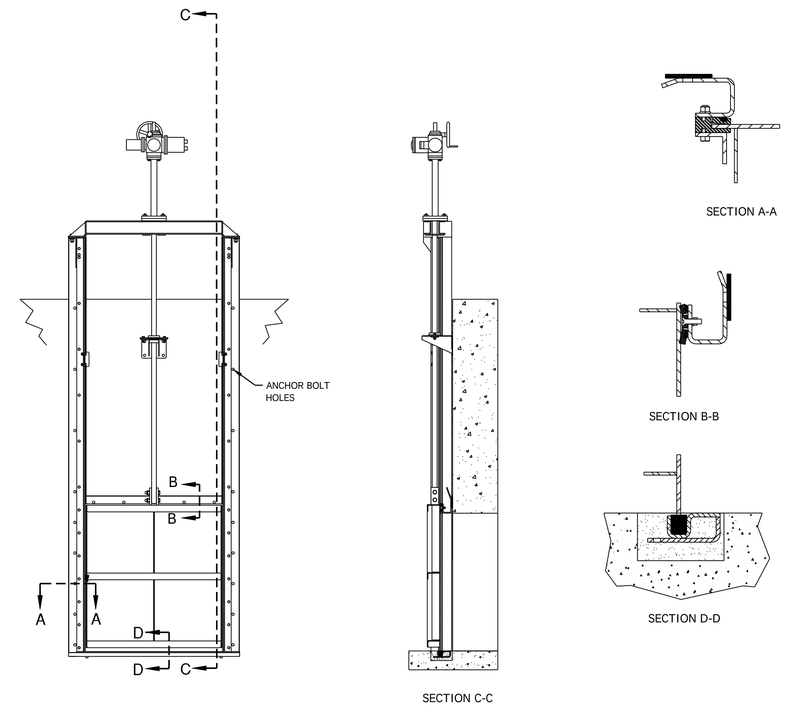

C4 G-101 & G-102 SURFACE MOUNTED SLIDE GATE DETAILS

N.T.S.

GATE SCHEDULE

LOCATION	GATE #	SIZE	MATERIAL	WALL THIMBLE	ELECTRIC ACTUATOR	REQUIRED OPEN-CLOSED CYCLE TIMES
SCREEN STRUCTURE	G-101	66"x66"	STAINLESS	NO	YES	4.75 MINUTES
SCREEN STRUCTURE	G-102	36"x36"	STAINLESS	NO	YES	2.5 MINUTES
FOUL SEWER-DRAIN PUMP STATION	G-801	12"x12"	STAINLESS	YES	YES	STANDARD
FOUL SEWER-DRAIN PUMP STATION	G-802	10"x10"	STAINLESS	YES	YES	STANDARD

CMT

License No. 184-000613

CONSULTANTS

MAY 2015

CSO SATELLITE
TREATMENT FACILITY
CONTRACT NO. 1

OWNER

MATTOON

MATTOON, ILLINOIS: *Working Together to Build the Future*

CITY OF MATTOON

MATTOON, ILLINOIS

MARK	DATE	DESCRIPTION

PROJECT NO:	12078-03-00
CAD DWG FILE:	120780300-D-501.DWG
DESIGNED BY:	SG
DRAWN BY:	DLB
CHECKED BY:	SJB
APPROVED BY:	

COPYRIGHT: CRAWFORD, MURPHY & TILLY, INC. 2015

SHEET TITLE

GATE DETAILS

D-501

SHEET 96 OF 128

Path: J:\Mattoon\12078-03\Draw\Sheets\1-CSO Satellite Treatment\120780300-D-501.dwg
Date: Wednesday, June 17, 2015 12:01:11 PM

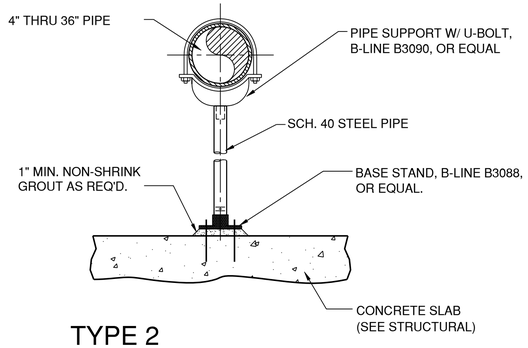

C1 TYPE 2 PIPE SUPPORT
N.T.S.

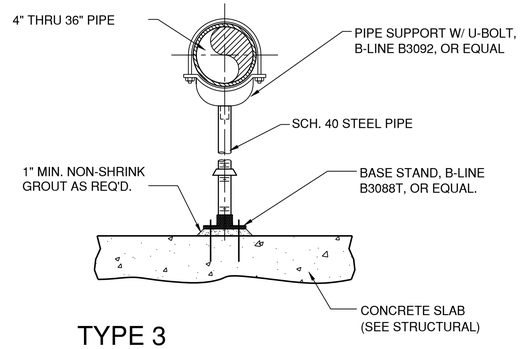

C2 TYPE 3 PIPE SUPPORT
N.T.S.

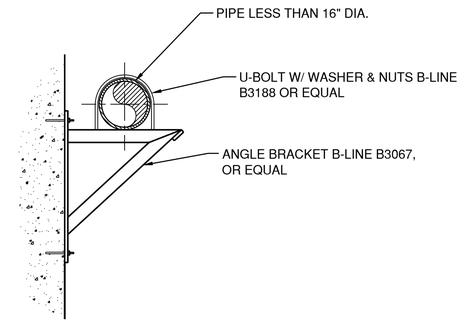

C3 TYPE 4 PIPE SUPPORT
N.T.S.

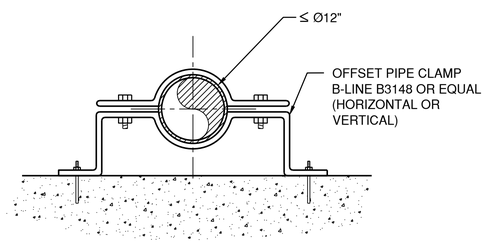

B1 TYPE 5 PIPE SUPPORT
N.T.S.

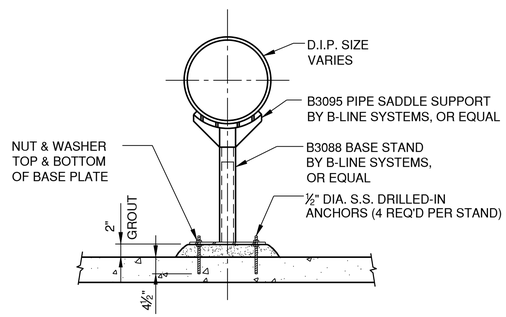

B2 TYPE 7 PIPE SUPPORT
N.T.S.

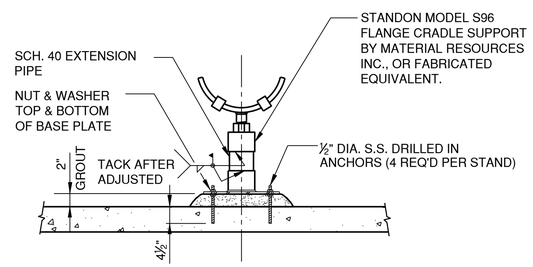

B3 TYPE 8 PIPE SUPPORT
N.T.S.

NOTES

1. PROVIDE HALF ROUND RIGID INSULATION AND INSULATION PROTECTION SHIELD WHERE PIPING IS INSULATED.
2. COAT PIPE SUPPORTS W/ SAME COLOR AS PIPE AND AS SPECIFIED IN SECTION 09960.
3. SUPPLY ALL NECESSARY COMPONENTS FOR A COMPLETE PIPE SUPPORT SYSTEM.
4. PIPE SUPPORT ANCHOR BOLTS SHALL BE SIZED PER MANUFACTURER'S RECOMMENDATION FOR THE PIPE SIZE BEING SUPPORTED.
5. PIPE SUPPORT SPACING SHALL BE PER SPECIFICATION SECTION 15260.
6. DRILLED-IN ANCHORS SHALL BE CHEMICAL ADHESIVE TYPE INSTALLED PER MANUFACTURER'S WRITTEN INSTRUCTIONS, UNLESS NOTED OTHERWISE.

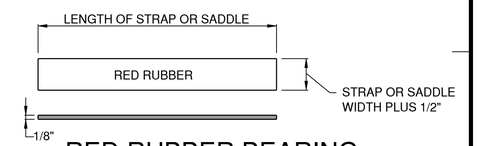

C5 RED RUBBER BEARING PAD DETAIL (FIXED PIPE SUPPORTS)
N.T.S.

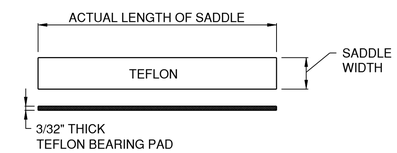

NOTES:

1. EPOXY THE BEARING PAD TO THE SADDLE WITH AN EPOXY RECOMMENDED BY THE TEFLON MANUFACTURER.
2. TEFLON BEARING PAD SHALL BE INSTALLED ON ENTIRE LENGTH AND WIDTH OF SADDLE.

B5 TEFLON BEARING PAD DETAIL (SLIDING PIPE SUPPORTS)
N.T.S.

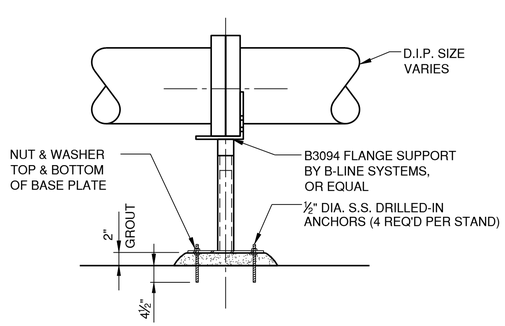

A1 TYPE 14 PIPE SUPPORT
N.T.S.

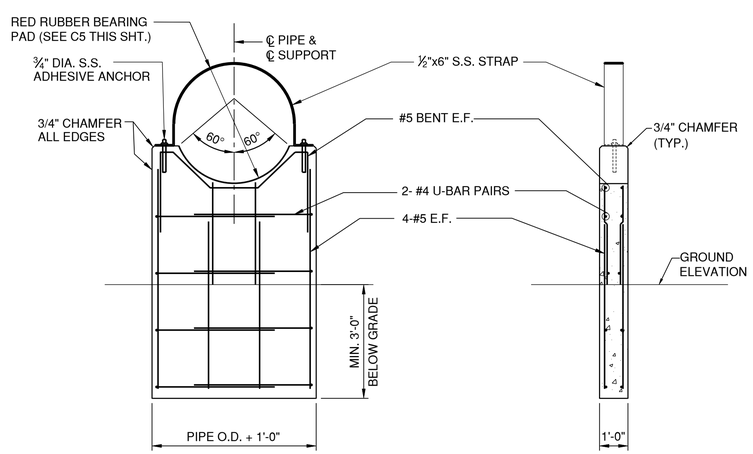

A2 CONCRETE SADDLE FIXED PIPE SUPPORT
1/2"=1'-0"

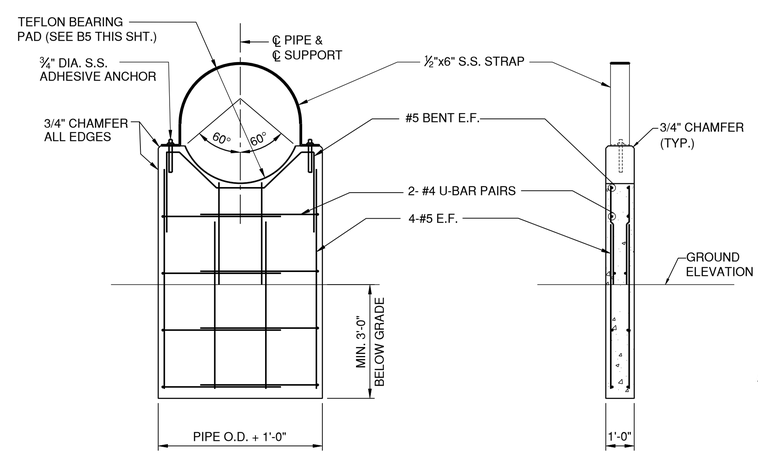

A4 CONCRETE SADDLE SLIDING PIPE SUPPORT
1/2"=1'-0"

CMT
License No. 184-000613
CONSULTANTS

MAY 2015

CSO SATELLITE TREATMENT FACILITY CONTRACT NO. 1

OWNER

MATTOON
MATTOON, ILLINOIS: *Working Together to Build the Future*

CITY OF MATTOON

MATTOON, ILLINOIS

MARK	DATE	DESCRIPTION

PROJECT NO:	12078-03-00
CAD DWG FILE:	120780300-D-502.DWG
DESIGNED BY:	SG
DRAWN BY:	DLB
CHECKED BY:	SJB
APPROVED BY:	

COPYRIGHT: CRAWFORD, MURPHY & TILLY, INC. 2015

SHEET TITLE
PIPE SUPPORT DETAILS

D-502

Path: J:\Mattoon\12078-03\Draw\Sheets\1-CSO Satellite Treatment\120780300-D-502.dwg
Date: Wednesday, June 17, 2015 12:01:25 PM

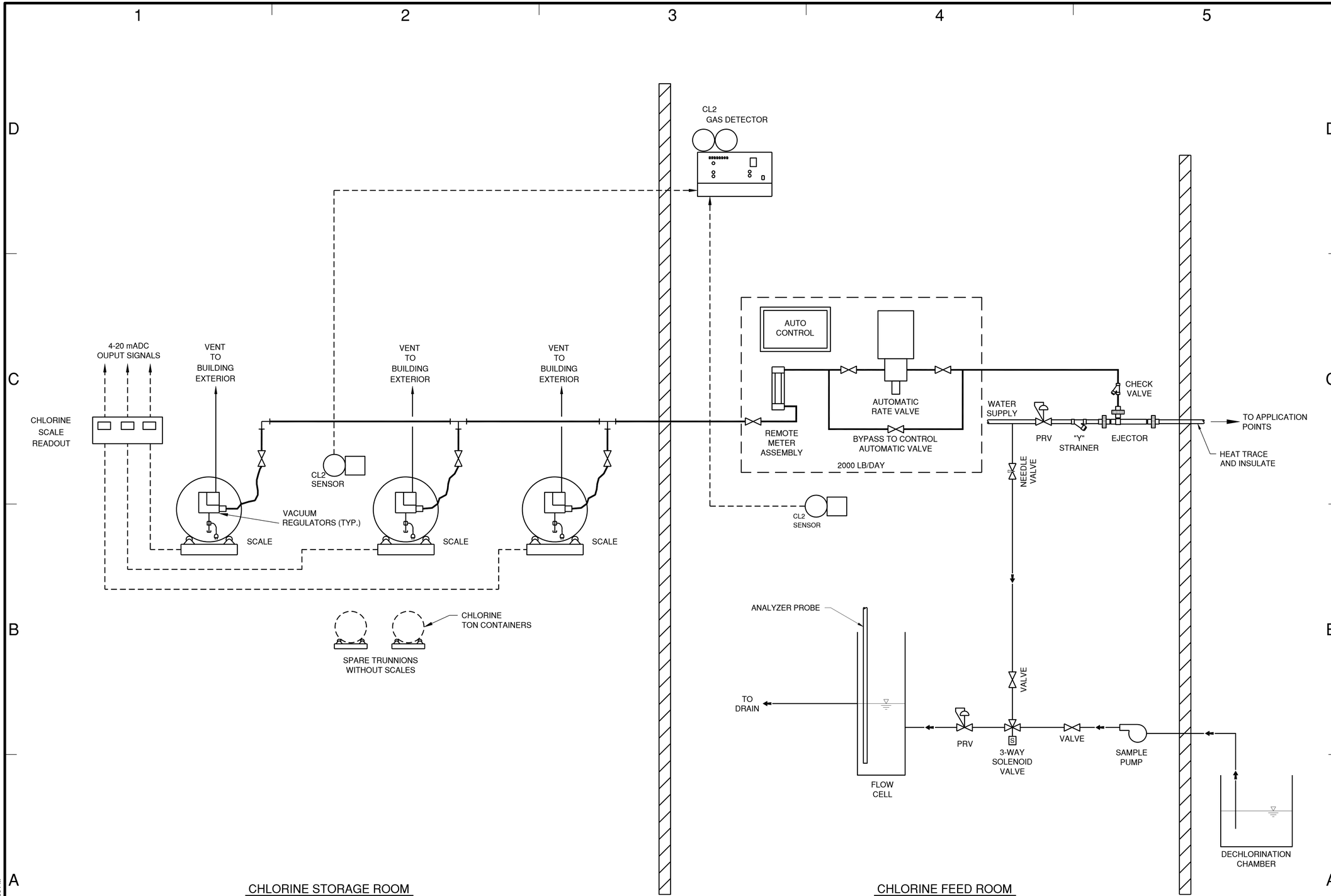

A1 CHLORINE SYSTEM SCHEMATIC
N.T.S.

CMT

License No. 184-000613

CONSULTANTS

MAY 2015

CSO SATELLITE
TREATMENT FACILITY
CONTRACT NO. 1

OWNER

MATTOON
MATTOON, ILLINOIS: *Working Together to Build the Future*

CITY OF MATTOON

MATTOON, ILLINOIS

MARK	DATE	DESCRIPTION

PROJECT NO:	12078-03-00
CAD DWG FILE:	120780300-D-661.DWG
DESIGNED BY:	RD
DRAWN BY:	DLB
CHECKED BY:	SJB
APPROVED BY:	

COPYRIGHT: CRAWFORD, MURPHY & TILLY, INC. 2015

SHEET TITLE

CHLORINE SYSTEM
SCHEMATICS

D-661

SHEET 98 OF 128

Path: J:\Mattoon\12078-03\Draw\Sheets\1-CSO Satellite Treatment\120780300-D-661.dwg
Date: Wednesday, June 17, 2015 12:01:36 PM

SYMBOLS

- AIR FILTER
- BALL VALVE
- CW — COLD WATER
- D — DRAIN
- DN — DUCT DOWN
- DUCTED AIRFLOW
- EXHAUST FAN
- FAN
- FD FD — FIRE DAMPER
- FLEXIBLE DUCT CONNECTION
- FS — FREEZE STAT
- GATE VALVE
- GLOBE VALVE
- MD MD — MANUAL DAMPER
- MOTOR STARTER
- M — MOTORIZED OPERATOR
- OPPOSED BLADE DAMPER
- PARALLEL BLADE DAMPER
- PIPE SLEEVE
- P — PRESSURE GAGE
- PRESSURE RELIEF VALVE
- REDUCER OR INCREASER - CONCENTRIC OR ECCENTRIC
- RETURN OR EXHAUST RISER
- SPLITTER DAMPER
- SUPPLY RISER
- T — THERMOSTAT
- TURNING VANES
- UNDUCTED AIRFLOW
- UNION
- V — VENT
- VD — VOLUME DAMPER

ABBREVAITIONS

ACCU	AIR COOLED CONDENSING UNIT
AFF	ABOVE FINISHED FLOOR
BDD	BACKDRAFT DAMPER
BOD	BOTTOM OF DUCT
BTU	BRITISH THERMAL UNIT PER HOUR
CD	CEILING DIFFUSER
CLG	CEILING
CFM	CUBIC FEET PER MINUTE
DH	DUCT HEATER
DIA	DIAMETER
DIFF	DIFFUSER
DWH	DOMESTIC WATER HEATER
DW	DOUBLE WALLED
DN	DOWN
EL./ELEV.	ELEVATION
EG	EXHAUST GRILLE
EF	EXHAUST FAN
EA	EXHAUST AIR
EAL	EXHAUST AIR LOUVER
E	EXHAUST
ESP	EXTERNAL STATIC PRESSURE
FCU	FAN COIL UNIT
FE	FIRE DAMPER
FD	FUME HOOD EXHAUST
FLEX	FLEXIBLE
GA	GAGE OR GAUGE
GPM	GALLONS PER MINUTE
GR	GRILLE
HP	HEAT PUMP
HW	HOT WATER
HVAC	HEATING VENTILATION AND AIR COND. UNIT
ID	INSIDE DIAMETER
INSUL.	INSULATION
L	LOUVER
MD	MANUAL DAMPER
MAT	MIXED AIR TEMPERATURE
NK	NECK
NO	NORMALLY OPEN
NC	NORMALLY CLOSED
OAL	OUTSIDE AIR LOUVER
OAI	OUTSIDE AIR INTAKE
OA	OUTSIDE AIR
POC	POINT OF CONNECTION
PBD	PARALLEL BLADE DAMPER
REQD	REQUIRED
RH	RADIANT HEATER
RE	RETURN/EXHAUST
RA	RETURN AIR
RO	ROOF OPENING
RR	RETURN REGISTER
RPM	ROTATIONS PER MINUTE
RTU	ROOF TOP HVAC UNIT
SD	SPLITTER DAMPER
S	SUPPLY
SA	SUPPLY AIR
SF	SUPPLY FAN
MBH	THOUSAND BRITISH THERMAL UNITS PER HOUR
TE	TOILET EXHAUST FAN
TS	TIP SPEED
TSP	TOTAL STATIC PRESSURE
TYP	TYPICAL
UD	UNDERCUT DOOR
UH	UNIT HEATER
VTR	VENT THRU ROOF
VIB	ISOL VIBRATION ISOLATOR
VD	VOLUME DAMPER
WP	WEATHER PROOF

GENERAL NOTES

1. WORK SHALL BE PERFORMED IN STRICT ACCORDANCE WITH THE LATEST CODES AND INDUSTRY STANDARDS, AS WELL AS THE LATEST OSHA, STATE OF ILLINOIS REQUIREMENTS, CITY OF MATTOON CODES, AND CITY OF MATTOON, ILLINOIS REQUIREMENTS.
2. CONTRACTOR SHALL COORDINATE WORK WITH OTHER TRADES AND INSTALL ALL EQUIPMENT, DUCTWORK, AND PIPING TO AVOID INTERFERENCE WITH STRUCTURAL MEMBERS AND EQUIPMENT.
3. DRAWINGS ARE TO BE USED IN CONJUNCTION WITH THE PROJECT SPECIFICATIONS AND OTHER RELATED DRAWINGS.
4. PIPING AND DUCT LAYOUT ARE APPROXIMATE AND SHOULD BE COORDINATED TO AVOID FIELD INTERFERENCES.
5. DUCTWORK AND PIPING SHALL BE INSTALLED IN A NEAT WORKMANLIKE MANNER, AND RUN PARALLEL OR PERPENDICULAR TO WALLS, CEILINGS, AND FLOORS.
6. DUCTWORK SIZES MAY BE MODIFIED TO SUIT SITE CONDITIONS AS LONG AS DUCT CROSS SECTIONAL AREA IS NOT REDUCED. ALL OFFSETS AND TRANSITIONS REQUIRED TO AVOID INTERFERENCES SHALL MAINTAIN SAME DUCT CROSS SECTIONAL AREAS AS INLET.
7. DUCT DIMENSIONS SHOWN ON DRAWINGS ARE INTERNAL DIMENSIONS REPRESENTING THE DUCT FREE AREA DIMENSIONS.
8. REFER TO ARCHITECTURAL DRAWINGS AND/OR CONSULT ARCHITECT/ ENGINEER PRIOR TO ROUGH-IN FOR MECHANICAL WORK TO AVOID FIELD CONFLICTS.
9. MATERIALS AND EQUIPMENT USED ON THIS PROJECT SHALL BE NEW. NEW EQUIPMENT SHALL BE U.L. APPROVED AS APPLICABLE.
10. HVAC DUCTWORK AND ACCESSORIES SHALL BE DESIGNED AND INSTALLED IN ACCORDANCE WITH SMACNA HVAC DUCT CONSTRUCTION STANDARDS AND APPLICABLE SPECIFICATION SECTIONS.
11. HVAC DUCTWORK, ACCESSORIES AND MATERIALS SHALL BE INSTALLED IN ACCORDANCE WITH THE APPLICABLE SPECIFICATION SECTIONS AND MANUFACTURERS RECOMMENDATIONS.
12. HVAC DUCTWORK SHALL BE INSULATED AS SPECIFIED IN ACCORDANCE WITH THE REQUIREMENTS OF SPECIFICATION SECTION 15082 AND AS OUTLINED BELOW:
    - A. INSULATE ALL OUTSIDE AIR INTAKE DUCTS.
    - B. PROVIDE DUCT LINER FOR EXPOSED AND CONCEALED, BUT ACCESSIBLE SUPPLY AND RETURN DUCTWORK INSIDE BUILDING, UNLESS NOTED OTHERWISE.
13. THERMOSTATS SHALL BE PROVIDED BY MECHANICAL CONTRACTOR, FIELD LOCATED, AND SHALL BE MOUNTED APPROXIMATELY 54" AFF.
14. DUCTWORK SHALL BE SHEET METAL, UNLESS NOTED OTHERWISE.
15. FLEXIBLE DUCTS SHALL NOT EXCEED 6' IN LENGTH.
16. PROVIDE TURNING VANES FOR ALL MITERED ELBOWS.
17. ALL OUTDOOR AIR INTAKE OPENINGS SHALL BE LOCATED MINIMUM 12' FROM EXHAUST AND VENT OPENINGS.

CMT

License No. 184-000613

CONSULTANTS

MAY 2015

CSO SATELLITE TREATMENT FACILITY CONTRACT NO. 1

OWNER

MATTOON

MATTOON, ILLINOIS: *Working Together to Build the Future*

CITY OF MATTOON

MATTOON, ILLINOIS

MARK	DATE	DESCRIPTION

PROJECT NO:	12078-03-00
CAD DWG FILE:	120780300-M-001.DWG
DESIGNED BY:	HEC
DRAWN BY:	DLB
CHECKED BY:	
APPROVED BY:	

COPYRIGHT: CRAWFORD, MURPHY & TILLY, INC. 2015

SHEET TITLE

HVAC ABBREVIATIONS, LEGEND AND NOTES

M-001

Path: J:\Mattoon\12078-03\Draw\Sheets\1-CSO Satellite Treatment\120780300-M-001.dwg
Date: Wednesday, June 17, 2015 12:02:15 PM

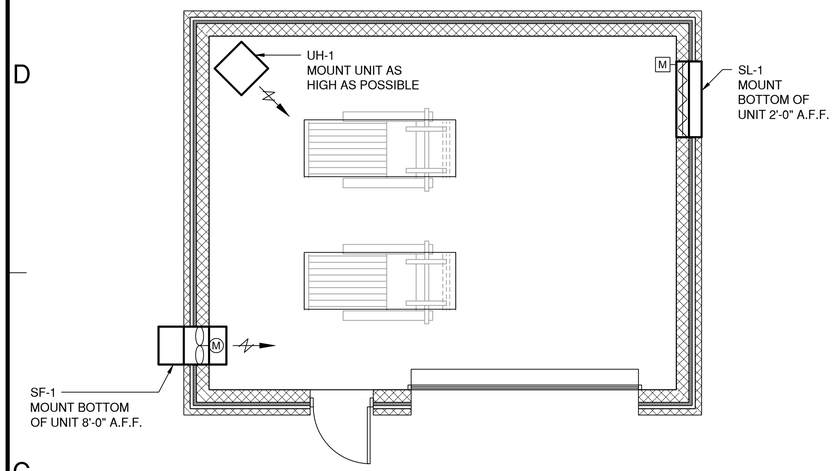

C1 PLAN VIEW
1/4"=1-0"

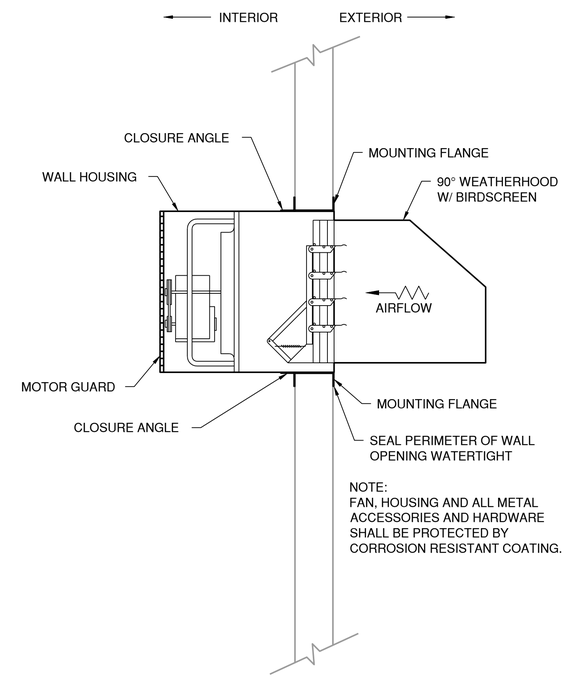

NOTE:
FAN, HOUSING AND ALL METAL ACCESSORIES AND HARDWARE SHALL BE PROTECTED BY CORROSION RESISTANT COATING.

D4 EXHAUST DETAIL
N.T.S.

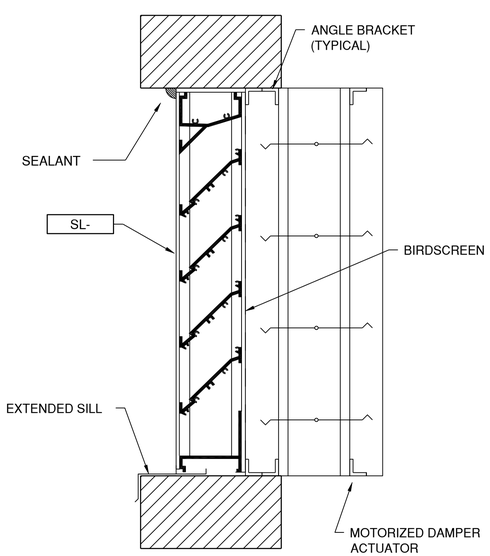

A1 STATIONARY LOUVER DETAIL WITH MOTORIZED DAMPER
N.T.S.

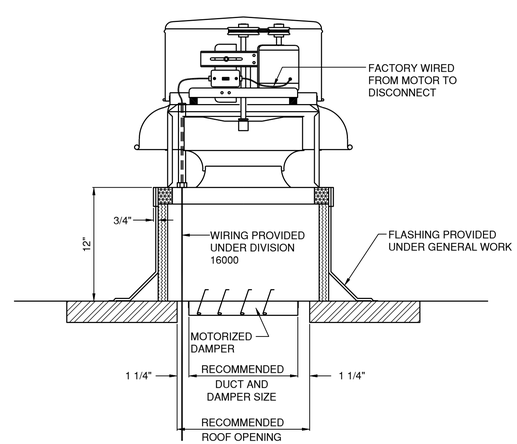

A3 STATIONARY LOUVER DETAIL WITH MOTORIZED DAMPER
N.T.S.

CMT
License No. 184-000613
CONSULTANTS

MAY 2015

CSO SATELLITE
TREATMENT FACILITY
CONTRACT NO. 1

OWNER

MATTOON
MATTOON, ILLINOIS: *Working Together to Build the Future*

CITY OF MATTOON

MATTOON, ILLINOIS

MARK	DATE	DESCRIPTION

PROJECT NO:	12078-03-00
CAD DWG FILE:	120780300-M-111.DWG
DESIGNED BY:	HEC
DRAWN BY:	DLB
CHECKED BY:	HEC
APPROVED BY:	TKB

COPYRIGHT: CRAWFORD, MURPHY & TILLY, INC. 2015

SHEET TITLE
SCREEN BUILDING
HVAC PLAN AND
DETAILS

M-111
SHEET 100 OF 128

Path: J:\Mattoon\12078-03\Draw\Sheets\1-CSO Satellite Treatment\120780300-M-111.dwg
Date: Wednesday, June 17, 2015 12:02:30 PM

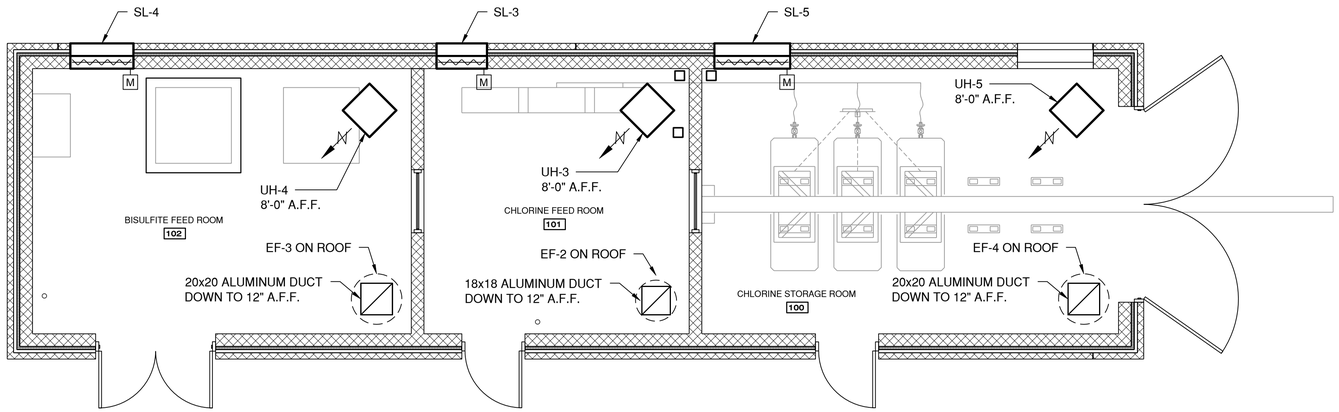

C1 CHEMICAL FEED BUILDING - PLAN VIEW

1/4"=1'-0"

N

0 2' 4' 8'

CMT

License No. 184-000613

CONSULTANTS

MAY 2015

CSO SATELLITE
TREATMENT FACILITY
CONTRACT NO. 1

OWNER

MATTOON

MATTOON, ILLINOIS: *Working Together to Build the Future*

CITY OF MATTOON

MATTOON, ILLINOIS

MARK	DATE	DESCRIPTION

PROJECT NO:	12078-03-00
CAD DWG FILE:	120780300-M-161.DWG
DESIGNED BY:	HEC
DRAWN BY:	DLB
CHECKED BY:	
APPROVED BY:	

COPYRIGHT: CRAWFORD, MURPHY & TILLY, INC. 2015

SHEET TITLE

CHEMICAL FEED
BUILDING PLAN

M-161

SHEET 101 OF 128

Path: J:\Mattoon\12078-03\Draw\Sheets\1-CSO Satellite Treatment\120780300-M-161.dwg
Date: Wednesday, June 17, 2015 12:02:43 PM

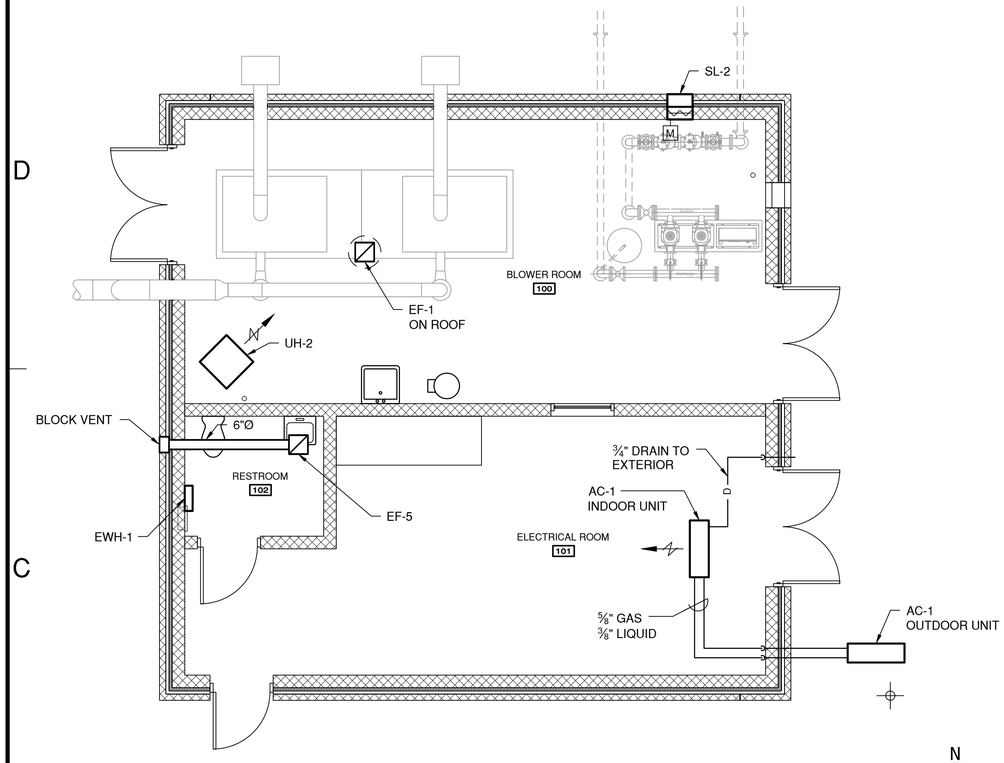

C1 PLAN VIEW
1/4"=1'-0"

N

0 2' 4' 8'

ELECTRIC UNIT HEATER SCHEDULE

MARK		UH-1	UH-2	UH-3	UH-4	UH-5	EWH-1
SERVICE		SCREEN BLDG.	BLOWER ROOM	CHLORINE ROOM	BISULFITE ROOM	CHLORINE STORAGE	TOILET
LOCATION		-	BLOWER BLDG.	CHEM. FEED BLDG.	CHEM. FEED BLDG.	CHEM. FEED BLDG.	BLOWER BLDG.
TYPE		EXPLOSION PROOF	HORIZONTAL	HORIZONTAL	HORIZONTAL	HORIZONTAL	CABINET
INPUT KW		10	10	5	5	10	1.5
FAN CFM		840	850	380	380	850	160
ELECT.	VOLT	460	460	460	460	460	120
	PHASE	3	3	3	3	3	1
ACCESSORIES		SEE NOTES 1,2,4,5,6	SEE NOTES 1,2,3	SEE NOTES 1,2,3	SEE NOTES 1,2,3	SEE NOTES 1,2,3	SEE NOTES 2,3
REMARKS		BOTOM OF UNIT 8'-0" A.F.F.	BOTOM OF UNIT 8'-0" A.F.F.	BOTOM OF UNIT 8'-0" A.F.F.	BOTOM OF UNIT 8'-0" A.F.F.	BOTOM OF UNIT 8'-0" A.F.F.	SURFACE MOUNT

NOTES:
1. WALL MOUNTING KIT
2. INTEGRAL THERMOSTAT
3. DISCONNECT SWITCH
4. CORROSION RESISTANT EPOXY COATING
5. EXPLOSION PROOF DISCONNECT SWITCH
6. UL LISTING FOR CONTINUOUS USE IN CLASS 1, DIV. 1, GROUP D HAZARDOUS AREAS

STATIONARY LOUVER SCHEDULE

MARK		SL-1	SL-2	SL-3	SL-4	SL-5
SERVICE		SCREEN BLDG.	BLOWER ROOM	CHLORINE ROOM	BISULFITE ROOM	CHLORING STOR.
LOCATION		-	BLOWER BLDG.	CHEM. FEED	CHEM. FEED	CHEM. FEED
TYPE		DRAINABLE	DRAINABLE	DRAINABLE	DRAINABLE	DRAINABLE
CFM		4375	500	2550	3650	4000
MAX. Δ S.P. (IN)		0.1	0.1	0.1	0.1	0.1
NOM. SIZE	WIDTH	48"	16"	32"	40"	48"
	HEIGHT	32"	16"	24"	32"	32"
	DEPTH	4"	4"	4"	4"	4"
AREA (SQ. FT.)	NET	10.67	1.78	5.33	8.89	10.67
	FREE	5.54	0.69	2.62	4.57	5.54
FRAME		MASONRY	MASONRY	MASONRY	MASONRY	MASONRY
MATERIAL		ALUMINUM	ALUMINUM	ALUMINUM	ALUMINUM	ALUMINUM
FINISH		KYNAR	KYNAR	KYNAR	KYNAR	KYNAR
ACCESSORIES		SEE NOTES 1,2,3,5	SEE NOTES 1,2,3,4	SEE NOTES 1,2,3,4	SEE NOTES 1,2,3,4	SEE NOTES 1,2,3,4
REMARKS		INTERLOCK W/ SF-1 MOUNT UNIT 2'-0"	INTERLOCK W/ EF-1 MOUNT UNIT 2'-0"AFF	INTERLOCK W/ EF-2 MOUNT UNIT 2'-0" AFF	INTERLOCK W/ EF-3 MOUNT UNIT 2'-0" AFF	INTERLOCK W/ EF-4 MOUNT UNIT 2'-0" AFF

NOTES:
1. COLOR TO BE SELECTED BY ARCHITECT
2. BIRD SCREEN
3. EXTENDED SILL
4. MOTORIZED DAMPER WITH 115 VOLT DAMPER
5. MOTORIZED DAMPER WITH 115 VOLT EXPLOSION PROOF DAMPER

FAN SCHEDULE

MARK		SF-1	EF-1	EF-2	EF-3	EF-4	EF-5
SERVICE		SCREEN ROOM	BLOWER ROOM	CHLORINE	BISULFITE	CHLORINE STOR.	TOILET
LOCATION		-	BLOWER BLDG.	CHEM. FEED	CHEM. FEED	CHEM. FEED	BLOWER BUILDING
TYPE		SIDEWALL	ROOFTOP CENT.	UPBLAST CENT.	UPBLAST CENT.	UPBLAST CENT.	CABINET
CFM		500	500	2,550	3,650	4000	100
S.P.		0.25	0.25	0.333	0.333	0.333	0.25
FAN RPM		1634	1634	1024	1063	835	950
MOTOR	HP	1/6	1/6	1/2	3/4	3/4	100 W
	VOLT	115	115	115	115	115	115
	PHASE	1	1	1	1	1	1
	RPM	1725	1725	1725	1725	1725	1725
ACCESSORIES		SEE NOTES 1,2,3,4,5,6,7,8,14	SEE NOTES 1,9,10,11,13	SEE NOTES 1,2,9,10,11,14	SEE NOTES 1,2,9,10,11,14	SEE NOTES 1,2,9,10,11,14	SEE NOTES 12,14,15,16,17,18
REMARKS		BOTTOM OF UNIT 8'-0" A.F.F.					

NOTES:
1. ALUMINUM BIRDSCREEN
2. CHEMICAL RESISTANT, BAKED ENAMEL FINISH
3. EXPLOSION PROOF MOTOR
4. NON-SPARKING BLADES
5. EXPLOSION PROOF DISCONNECT
6. UL LISTING FOR CONTINUOUS USE IN CLASS 1, DIV. 1, GROUP D HAZARDOUS AREAS
7. EXPLOSION PROOF MOTORIZED DAMPER WITH 115 V ACTUATOR AND TRANSFORMER AS REQUIRED
8. WALL HOUSING WITH WEATHER HOOD AND MOTOR GUARD
9. 12" HIGH ALUMINUM ROOF CURB
10. WEATHER TIGHT DISCONNECT SWITCH
11. MOTORIZED DAMPER WITH 115 V ACTUATOR AND CONTOL TRANSFORMER AS REQUIRED
12. DISCONNECT SWITCH
13. THERMOSTAT CONTROL WITH HAND-OFF-AUTO SWITCH
14. CONTROLLED WITH LIGHTS SO UNIT IS ON WHEN OCCUPIED
15. VIBRATION ISOLATORS
16. COUNTER BALANCED GRAVITY BACKDRAFT DAMPER
17. WALL CAP WITH BIRDSCREEN
18. ALUMINUM GRILLE

DUCTLESS SPLIT AIR CONDITIONER SCHEDULE

MARK		AC-1
SERVICE		ELECTRICAL ROOM
LOCATION		BLOWER BLDG.
TOTAL COOLING BTUH		34,200
HEATING BTUH		25,000
SEER		14
REFRIGERANT TYPE		R-410A
HSPF		9.3
INDOOR UNIT	CFM (LO-HIGH)	705-920
	MCA	1
	FAN MOTOR FLA	0
	AUX. HEATER KW / AMPS	0.57
OUTDOOR UNIT	V/PH/HZ	208/230-1-60
	MOCP	40
	MCA	25
	FAN MOTOR FLA	0.75
	COMPRESSOR RLA	12
	COMPRESSOR LRA	17.5
ACCESSORIES		SEE NOTES: 1,2,3,4,5
REMARKS		5/8" SUCTION LINE 3/8" DISCHARGE LINE

NOTES:
1. MOUNT CONDENSING UNIT ON GRADE.
2. WIRELESS THERMOSTAT
3. CEILING SUSPENDED
4. CONDENSATE PUMP
5. LOW AMBIENT CONTROLS DOWN TO 0°F

CMT

License No. 184-000613

CONSULTANTS

MAY 2015

CSO SATELLITE TREATMENT FACILITY CONTRACT NO. 1

OWNER

MATTOON
MATTOON, ILLINOIS: *Working Together to Build the Future*

CITY OF MATTOON

MATTOON, ILLINOIS

MARK	DATE	DESCRIPTION

PROJECT NO:	12078-03-00
CAD DWG FILE:	120780300-M-171.DWG
DESIGNED BY:	HEC
DRAWN BY:	DLB
CHECKED BY:	
APPROVED BY:	

COPYRIGHT: CRAWFORD, MURPHY & TILLY, INC. 2015

SHEET TITLE

BLOWER AND ELECTRICAL BUILDING PLAN

M-171

SHEET 102 OF 128

Path: J:\Mattoon\12078-03\Draw\Sheets\1-CSO Satellite Treatment\120780300-M-171.dwg
Date: Wednesday, June 17, 2015 12:03:12 PM

POWER & LIGHTING LEGEND

- $ — SINGLE POLE SWITCH
- $2 — TWO POLE SWITCH
- $3 — THREE WAY SWITCH
- $4 — FOUR WAY SWITCH
- $ — FRACTIONAL H.P. MANUAL STARTER
- $MC — MOMENTARY CONTACT SINGLE POLE DOUBLE THROW SWITCH
- $K — KEY-OPERATED SWITCH
- $P — SWITCH AND PILOT LAMP
- SIMPLEX RECEPTACLE
- DUPLEX RECEPTACLE
- DUPLEX FLOOR OUTLET
- QUADRUPLEX RECEPTACLE
- SPECIAL PURPOSE OUTLET (IDENTIFIED ON DRAWINGS)
- DATA/PHONE JACK WITH 2-4 PR. CAT6 IN 3/4"C. TO POE
- J — JUNCTION BOX (LINE GOES TO BOX)
- F# — LIGHT FIXTURE. # = TYPE
- FL — FLUORESCENT LIGHT FIXTURE. # = TYPE
- EL — EMERGENCY FLUORESCENT LIGHT FIXTURE. # = TYPE
- EXIT SIGN - SHADED AREA DENOTES VIEWED FACE

NEUTRAL / HOT — # 12 THWN UNLESS OTHERWISE SPECIFIED. LONG AND SHORT HASH LINES DENOTE NUMBER OF CURRENT CARRYING WIRES. G = SEPARATE GROUND WIRE.

- U — INDICATES ONE WIRE IN CONDUIT IS AN UNSWITCHED HOT LEG (FOR EMERGENCY LIGHTING)
- LP# — LIGHTING PANEL
- PP# — POWER PANEL
- T — THERMOSTAT
- S — SOLVENOID VALVE
- M — MOTORIZED VALVE
- RTU 1 — MECHANICAL EQUIPMENT DESIGNATION (SEE SCHEDULES)
- GROUND ROD
- EXPLOSION PROOF CONDUIT SEAL

ENCLOSED SWITCHES - PLAN

- DISCONNECT SWITCH
- MANUAL MOTOR DISCONNECT
- P — DECONTACTOR DISCONNECT

NOTES

1. ALL ELECTRICAL EQUIPMENT SHALL BE INSTALLED IN CONFORMANCE WITH NFPA 70 (CURRENT LOCAL VERSION IN FORCE), THE RESPECTIVE EQUIPMENT MANUFACTURER'S DIRECTIONS AND ALL OTHER APPLICABLE LOCAL CODES, LAWS, ORDINANCES AND REQUIREMENTS IN FORCE. ANY INSTALLATIONS WHICH VOID THE U.L. LISTINGS (OR THIRD PARTY LISTING) AND/OR THE MANUFACTURER'S WARRANTY OF A DEVICE SHALL NOT BE PERMITTED.

SCHEMATIC LEGEND

- NORMALLY OPEN (N.O.) CONTACT.
- NORMALLY CLOSED (N.C.) CONTACT.
- S* — STARTER COIL. * = STARTER NUMBER
- OL — OVERLOAD RELAY CONTACT
- CR* — CONTROL RELAY. * = CONTROL RELAY NUMBER
- TD* — TIME DELAY RELAY. * - DEVICE NUMBER. ** - TIME SETTING.
- CLOSED SWITCH WITH TIME DELAY OPENING
- OPEN SWITCH WITH TIME DELAY CLOSING
- CLOSED SWITCH WITH TIME DELAY CLOSING
- OPEN SWITCH WITH TIME DELAY OPENING
- PT* — PERCENTAGE TIMER. * = PERCENTAGE TIMER NUMBER
- P — PILOT LIGHT. (P)=LETTER DENOTING COLOR, E.G. R=RED, G=GREEN, A=AMBER
- HORN
- SV* — SOLENOID VALVE. * = SOLENOID VALVE NUMBER
- O H A — 3-POSITION SELECTOR SWITCH (H-O-A SHOWN)
- ON OFF — 2-POSITION SELECTOR SWITCH
- N.C. (STOP), N.O. (START) — PUSHBUTTONS
- N.C., N.O. — PRESSURE SWITCHES
- N.C., N.O. — LEVEL SWITCHES
- N.C., N.O. — THERMAL SWITCHES
- N.C., N.O. — FLOW SWITCHES
- N.C., N.O. — LIMIT SWITCHES
- N.C., N.O. — PROXIMITY SWITCHES
- CONNECTOR, DISCONNECTING DEVICE
- TIME CLOCK
- PHOTOCELL
- * — TERMINAL BLOCK. * = TERMINAL NUMBER
- * — DEVICE TERMINAL. * = DEVICE TERMINAL NUMBER
- RTM — RUN TIME METER, HOUR METER
- EXISTING INTERNAL PANEL WIRING OR DEVICES
- PROPOSED INTERNAL PANEL WIRING OR DEVICES
- EXISTING FIELD WIRING OR DEVICES
- PROPOSED FIELD WIRING OR DEVICES

ABBREVIATIONS

A/C	AIR CONDITIONER
A/E	ARCHITECT/ENGINEER
A.F.F.	ABOVE FINISHED FLOOR
AC	ABOVE COUNTER
ADA	AMERICAN DISABILITIES ACT
AHU	AIR HANDLING UNIT
ASC	ABOVE SUSPENDED CEILING
AUX	AUXILIARY
AWG	AMERICAN WIRE GAGE
C	CONDUIT
CAT.	CATALOG
CB	CIRCUIT BREAKER
CIRC. BRKR.	CIRCUIT BREAKER
CKT	CIRCUIT
CPT	CONTROL POWER TRANSFORMER
CT	CURRENT TRANSFORMER
DPDT	DOUBLE POLE DOUBLE THROW
DPST	DOUBLE POLE SINGLE THROW
E.C.	ELECTRICAL CONTRACTOR
EMT	ELECTRICAL METALLIC TUBING
EP	EXPLOSION PROOF
EWC	ELECTRIC WATER COOLER
EXH	EXHAUST
G	GROUND
GFCI	GROUND FAULT CIRCUIT INTERRUPTER
GFI	GROUND FAULT INTERRUPTER
GND	GROUND
GRSC	GALVANIZED RIGID STEEL CONDUIT
HH	HANDHOLE
HOA	HAND OFF AUTO
HP	HORSEPOWER
HZ	HERTZ (CYCLE)
JB	JUNCTION BOX
KVA	KILOVOLT AMPERE
KW	KILOWATT
LC	LIGHTING CONTACTOR
MC	MOMENTARY CONTACT
MCA	MINIMUM CIRCUIT AMPS
MCC	MOTOR CONTROL CENTER
MCP	MOTOR CIRCUIT PROTECTOR
MECH	MECHANICAL
MFR	MANUFACTURER
MH	MANHOLE
MH	MOUNTING HEIGHT
MLO	MAIN LUGS ONLY
NEC	NATIONAL ELECTRIC CODE
NF	NON-FUSED
NIC	NOT IN CONTRACT
NO.	NUMBER
OL	OVERLOAD
OS	OCCUPANCY SENSOR
PB	PULL BOX OR PUSHBUTTON
PLC	PROGRAMMABLE LOGIC CONTROLLER
PNL	PANELBOARD
PF	POWER FACTOR
PT	POTENTIAL TRANSFORMER
RECEPT	RECEPTACLE
RM	ROOM
RTU	REMOTE TERMINAL UNIT
RTU	ROOF TOP UNIT
SPDT	SINGLE POLE DOUBLE THROW
SPST	SINGLE POLE SINGLE THROW
SWGR	SWITCHGEAR
TTB	TELEPHONE TERMINAL BOARD
TVSS	TRANSIENT VOLTAGE SURGE SUPPRESSOR
TYP.	TYPICAL
UH	UNIT HEATER
VFD	VARIABLE FREQUENCY DRIVE
WP	WEATHERPROOF
XFMR	TRANSFORMER

ONE-LINE LEGEND

- GROUND - CHASSIS, BUS, OR AT EARTH POTENTIAL
- 1Ø 3Ø MOTOR
- CIRCUIT BREAKER (MAGNETIC ONLY)
- CIRCUIT BREAKER (THERMAL MAGNETIC)
- FUSE
- LIGHTNING ARRESTOR
- REMOTE CONTROL STATION. (3-DEVICE STA. SHOWN)
- CAPACITOR
- CURRENT TRANSFORMER
- POTENTIAL TRANSFORMER
- A — AMMETER
- V — VOLTMETER
- G — GENERATOR
- AS — AMMETER SWITCH
- VS — VOLTMETER SWITCH
- SIZE # — COMBINATION CIRCUIT BREAKER/STARTER WITH OVERLOAD PROTECTION. # = NEMA SIZE NO.
- TRANSFORMER

ENCLOSED SWITCHES

- DISCONNECT SWITCH
- MANUAL MOTOR DISCONNECT
- DECONTACTOR DISCONNECT

SITE PLAN LEGEND

- T — PAD MOUNTED TRANSFORMER
- POWER POLE
- OHE — EXISTING OVERHEAD ELECTRIC
- UGE C — EXISTING UNDERGROUND ELECTRIC
- UGE C — PROPOSED UNDERGROUND ELECTRIC
- E — EXISTING ELECTRIC MANHOLE
- E — PROPOSED ELECTRIC MANHOLE
- E — PROPOSED ELECTRIC HANDHOLE - PRIMARY
- H — PROPOSED ELECTRIC HANDHOLE
- R — EXISTING LIGHT FIXTURE R-INDICATES TO BE REMOVED
- PROPOSED LIGHT FIXTURE POLE MOUNTED ARROWS INDICATES LUMINAIRE ORIENTATION

CMT

License No. 184-000613

CONSULTANTS

MAY 2015

CSO SATELLITE TREATMENT FACILITY CONTRACT NO. 1

OWNER

MATTOON

MATTOON, ILLINOIS: *Working Together to Build the Future*

CITY OF MATTOON

MATTOON, ILLINOIS

MARK	DATE	DESCRIPTION

PROJECT NO:	12078-03-00
CAD DWG FILE:	120780300-E-001.DWG
DESIGNED BY:	LDW
DRAWN BY:	DLB
CHECKED BY:	DJW
APPROVED BY:	TJB

COPYRIGHT: CRAWFORD, MURPHY & TILLY, INC. 2015

SHEET TITLE

STANDARD LEGEND AND ABBREVIATIONS

E-001

Path: J:\Mattoon\12078-03\Draw\Sheets\1-CSO Satellite Treatment\120780300-E-001.dwg
Date: Wednesday, June 17, 2015 12:03:51 PM

GENERAL CONDUIT & DUCT BANK NOTES

1. MINIMUM CONDUIT SIZE SHALL BE ¾" IN DIAMETER UNLESS OTHERWISE NOTED ON THE DRAWINGS.
2. ALL CONDUIT INSTALLED ABOVE GRADE, BOTH INTERIOR AND EXTERIOR, SHALL BE RIGID ALUMINUM UNLESS OTHERWISE NOTED ON THE DRAWINGS.
3. ALL CONDUIT INSTALLED BELOW GRADE SHALL BE CONCRETE-ENCASED SCHEDULE 40 PVC DUCT BANK UNLESS OTHERWISE NOTED ON THE DRAWINGS.
4. ALL DUCT BANK BELOW PAVED SURFACES EXPOSED TO VEHICULAR TRAFFIC SHALL BE REINFORCED TO MINIMUM OF 5'-0" BEYOND EDGE OF PAVEMENT AS DETAILED ON THE DRAWINGS.
5. ALL TRANSITIONS FROM BELOW GRADE CONCRETE-ENCASED SCHEDULE 40 PVC DUCT BANK TO RIGID METAL CONDUIT SHALL BE MADE WITHIN THE CONCRETE ENCASEMENT AS DETAILED ON THE DRAWINGS.
6. CONDUIT INSTALLED BETWEEN CONCRETE-ENCASED BELOW-GRADE DUCT BANK AND 6" (MINIMUM) ABOVE FINISH GRADE MAY BE ANY OF THE FOLLOWING AT THE CONTRACTOR'S OPTION:
   a. TAR-COATED RIGID ALUMINUM
   b. TAR-COATED GALVANIZED RIGID STEEL
   c. PVC-COATED GALVANIZED RIGID STEEL
7. WHERE TAR-COATING OF CONDUIT IS UTILIZED IN NOTE #6a, ALL METAL CONDUIT SURFACES IN DIRECT CONTACT WITH EARTH OR CONCRETE SHALL RECEIVE ONE COAT, MINIMUM 8 DRY MILS, OF COAL-TAR EPOXY OR EQUIVALENT. APPLY COATINGS IN CONFORMANCE WITH MANUFACTURER'S DIRECTIONS AND RECOMMENDATIONS. PROTECT ADJACENT CONCRETE AND STEEL SURFACES DURING INSTALLTION TO PREVENT OVERSPRAY AND DRIPS.
8. ALL CONDUIT SIZE AND FILL REQUIREMENTS SHALL COMPLY WITH CHAPTER 9 AND ANNEX "C" OF THE LATEST EDITION OF THE NEC. CONDUITS FOUND TO BE FILLED BEYOND THAT ALLOWED BY NEC SHALL BE REMOVED AND REPLACED WITH SUITABLY SIZED CONDUITS AT THE CONTRACTOR'S EXPENSE.
9. IN NON-HAZARDOUS (NON-CLASSIFIED) LOCATIONS, CONDUIT RUNS EMBEDDED IN STRUCTURE WALLS, EMBEDDED WITHIN CONCRETE FLOOR SLABS, OR INSTALLED BELOW CONCRETE FLOOR SLABS MAY BE EITHER SCHEDULE 40 PVC OR GALVANIZED RIGID STEEL. INSTALL THE TRANSITION COUPLING TO RIGID ALUMINUM CONDUIT APPROXIMATELY 6" ABOVE INTERIOR FLOOR GRADE.
10. IN HAZARDOUS (CLASSIFIED) LOCATIONS, ALL CONDUIT RUNS ABOVE GRADE SHALL BE RIGID ALUMINUM. CLASSIFIED LOCATION CONDUITS EMBEDDED IN STRUCTURE WALLS, EMBEDDED WITHIN CONCRETE FLOOR SLABS, OR IN CONTACT WITH EARTH BELOW CONCRETE FLOOR SLABS SHALL BE GALVANIZED RIGID STEEL. WHETHER OR NOT SPECIFICALLY NOTED ON THE DRAWINGS, FURNISH CONDUIT SEALS FOR ALL CONDUITS ENTERING OR LEAVING A HAZARDOUS (CLASSIFIED) LOCATION WITHIN 18" OF CLASSIFIED LOCATION "ENVELOPE" BARRIER. NO ADDITIONAL CONDUIT FITTINGS (EXCEPT CONDUIT REDUCERS) WILL BE ALLOWED BETWEEN THE FINAL CONDUIT SEAL AND THE LIMITS OF THE CLASSIFIED AREA. ALL CONDUIT SEALS REQUIRED TO COMPLY WITH ARTICLE 500 OF THE NEC ARE CONSIDERED INCIDENTAL TO THIS ITEM, WHETHER OR NOT SPECIFICALLY SHOWN.
11. CONDUIT SEAL CONDUCTOR CROSS SECTIONAL AREA SHALL NOT EXCEED 25% FILL UNLESS DEVICE IS THIRD PARTY LISTED FOR HIGHER FILL PERCENTAGE PER NEC ARTICLE 501.15C6. CONDUIT SEAL BARRIER MATERIAL SHALL NOT BE DISTURBED AFTER INSTALLATION. SHOULD CONDUCTORS REQUIRE REMOVAL, THE ENTIRE CONDUIT SEAL SHALL BE DISCARDED AND A NEW UNIT INSTALLED IN ITS PLACE.
12. IN ORDER TO MAINTAIN NEC RATINGS AND CLASSIFICATIONS OF CABLES, DO NOT COMBINE POWER WIRING OR MODIFY CONDUIT MATERIALS OF CONSTRUCTION. THIS APPLIES TO ALL 3-PHASE CIRCUITS REGARDLESS OF OPERATING VOLTAGE.
13. LIGHTING CIRCUITS (120 VAC ONLY) AND RECEPTACLE CIRCUITS (120 VAC ONLY) MAY BE COMBINED. CONTRACTOR SHALL BE SOLELY RESPONSIBLE FOR ADEQUATELY INCREASING CONDUIT SIZES SHOWN ON PROJECT DOCUMENTS TO MEET NEC CONDUIT-FILL REQUIREMENTS. DO NOT COMBINE WITH CONTROL CIRCUIT WIRING.
14. CONTROL CIRCUITS (120 VAC ONLY) MAY BE COMBINED IF NOT INDICATED OTHERWISE ON PLANS. CONTRACTOR SHALL BE SOLELY RESPONSIBLE FOR ADEQUATELY INCREASING CONDUIT SIZES SHOWN ON PROJECT DOCUMENTS TO MEET NEC CONDUIT-FILL REQUIREMENTS. DO NOT COMBINE WITH LIGHTING AND RECEPTACLE CIRCUIT WIRING.
15. SHIELDED CABLES FOR ANALOG CIRCUIT WIRING (4-20 MA DC SHIELDED CABLES) MAY BE COMBINED WITH OTHER SHIELDED CABLES USED SOLELY FOR ANALOG WIRING. DO NOT COMBINE SHIELDED CABLES WITH ANY OTHER POWER, CONTROL OR SIGNAL CONDUCTORS. CONTRACTOR SHALL BE SOLELY RESPONSIBLE FOR ADEQUATELY INCREASING CONDUIT SIZES SHOWN ON PROJECT DOCUMENTS TO MEET NEC CONDUIT-FILL REQUIREMENTS.
16. LIQUID-TIGHT FLEXIBLE METAL CONDUIT SHALL BE PROVIDED AS A CONNECTION BETWEEN EACH MOTOR/TRANSFORMER JUNCTION BOX (OR ANY PIECE OF EQUIPMENT SUBJECT TO MINOR MOVEMENT OR VIBRATION) AND THE BALANCE OF THE CONDUIT SYSTEM. LIQUID-TIGHT FLEXIBLE METAL CONDUIT SHALL NOT EXCEED 3' IN LENGTH AND SHALL BE OZ-GEDNEY TYPE UAG, OR EQUIVALENT.
17. DUE TO THE CORROSIVE ATMOSPHERE AT WASTE-WATER TREATMENT FACILITIES, ALL EXPLOSION-PROOF FLEXIBLE METAL CONDUIT INSTALLED IN HAZARDOUS (CLASSIFIED) LOCATIONS SHALL BE CONSTRUCTED WITH STAINLESS-STEEL EXTERIOR BRAID SUCH AS CROUSE-HINDS ECGJH####-S516 or ECLK####-S516, OR EQUIVALENT. BRASS-BRAID EXPLOSION PROOF FLEXIBLE METAL CONDUIT WILL BE REJECTED AND WILL REQUIRE REPLACEMENT AT THE CONTRACTOR'S EXPENSE.
18. ALL MOUNTING HARDWARE AND FASTENERS FOR CONDUITS SHALL BE STAINLESS-STEEL.

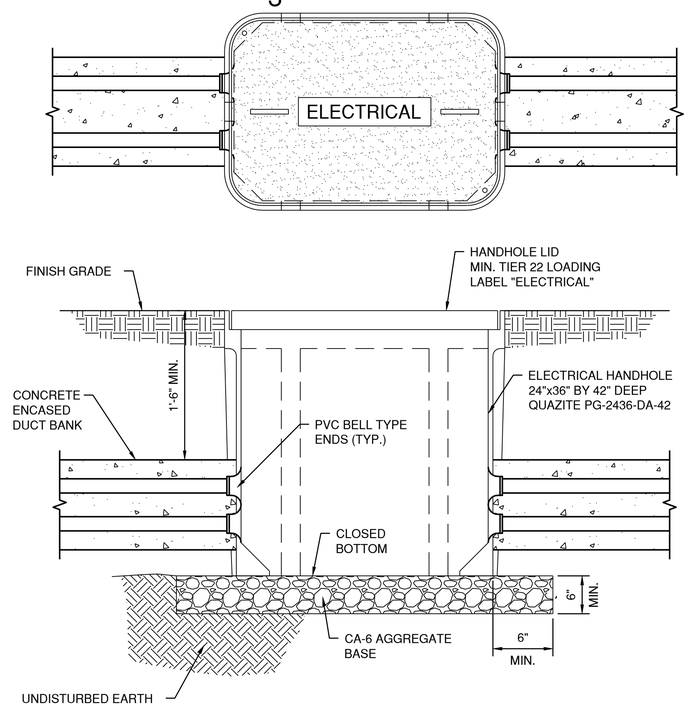

ELECTRICAL HANDHOLE DETAIL

C3 N.T.S.

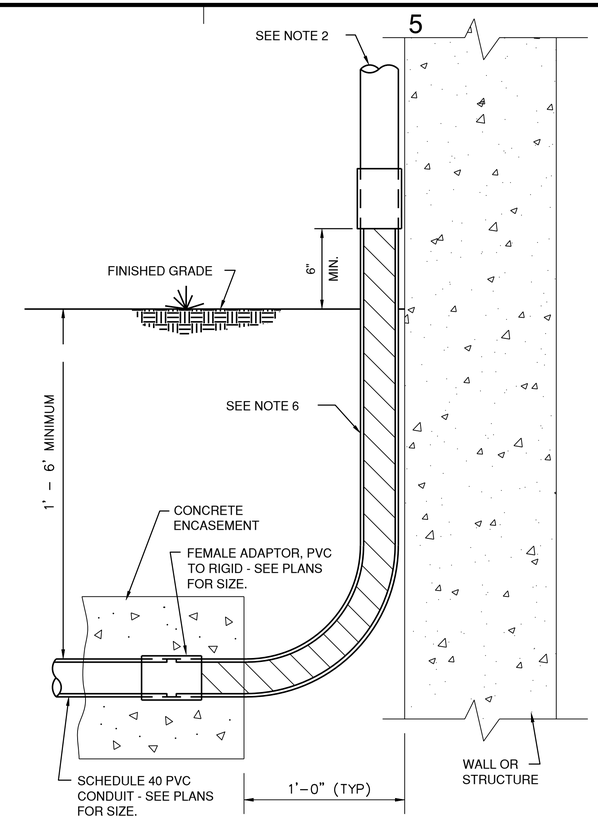

EXTERIOR DUCTBANK UNDERGROUND TRANSITION

C4 N.T.S.

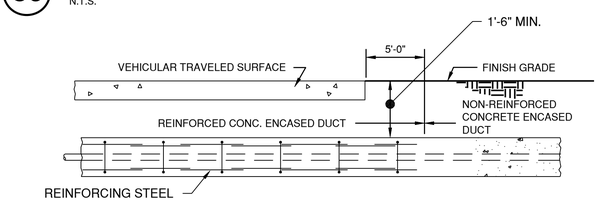

REINFORCED DUCT INSTALLATION

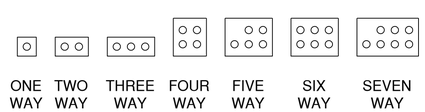

TYPICAL DUCT BANK CONFIGURATIONS

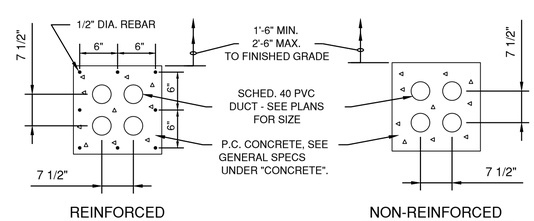

NOTES

1.) ALL DIMENSIONS ARE MINIMUM.

2.) REINFORCED STEEL TO BE MIN. #4 REBAR, MIN. 18" LAP.

CONCRETE ENCASED DUCT DETAILS (4-WAY SHOWN)

A3 N.T.S.

HANDHOLE WIRING NOTES

1. ALL WIRING IN HANDHOLES SHALL BE LABELED. LABELING MATERIALS SHALL BE SUITABLE FOR USE IN THE ENVIRONMENT AND SHALL BE WATERPROOF. LABELS SHALL IDENTIFY EACH 480V, 240V AND 120V AND MONITOR CIRCUIT PER MASTER CIRCUIT LABELING SCHEDULE DEVELOPED BY ELECTRICAL CONTRACTOR.
2. WHEREVER POSSIBLE, WIRING TO INDIVIDUAL STRUCTURES AND PIECES OF EQUIPMENT SHALL BE GROUPED TOGETHER IN HANDHOLES (SEE NOTE #3, BELOW, FOR ADDITIONAL REQUIREMENTS). MULTIPLE CONDUCTORS OF INDIVIDUAL CIRCUITS SHALL BE TIE-WRAPPED TOGETHER AND LABELED.
3. WHEREVER POSSIBLE, 480V WIRING, 120V/240V WIRING AND MONITOR/ALARM WIRING SHALL BE SEPARATED FROM EACH OTHER IN HANDHOLES. MONITOR WIRING SHALL BE ROUTED ABOVE 120V/240V WIRING WHICH, IN TURN, SHALL BE ROUTED ABOVE 480V WIRING.

CLASSIFIED LOCATIONS AND LIMITS ON PROJECT

(PROJECT LOCATIONS OR STRUCTURES NOT LISTED BELOW ARE CONSIDERED "UNCLASSIFIED")

THE FOLLOWING LOCATIONS AND LIMITS ARE CONSIDERED CLASSIFIED (HAZARDOUS) LOCATIONS. ALL ELECTRICAL EQUIPMENT AND ELECTRICAL WIRING METHODS SHALL COMPLY WITH THE APPLICBLE SECTIONS OF THE NATIONAL ELECTRICAL CODE (NFPA-70) ARTICLES 500 AND 501 WHETHER OR NOT SPECIFICALLY NOTED ELSEWHERE.

LOCATION NAME	HAZARDOUS CLASSIFICATION			LIMITS OF CLASSIFIED (HAZARDOUS) RATING
	CLASS	DIVISION	GROUP	
SCREEN FACILITES	1	1	D	ENCLOSED SPACE
INFLUENT PUMP STATION WETWELL AND HEADBOX	1	1	D	ENCLOSED SPACE
FIRST FLUSH TANK	1	2	D	FROM WATER TO 18" ABOVE WALL AND 18" ENVELOPE FROM SIDE WALL EXTENDED TEN FEET HORIZONTALLY FROM WALL
FOUL PUMPING STATION AND ASSOCIATED HEADBOX	1	1	D	ENCLOSED SPACE
RIELEY CREEK PUMP STATION WET WELL	1	1	D	ENCLOSED SPACE
EXISTING SCREEN BUILDING	1	1	D	ENCLOSED SPACE

CMT

License No. 184-000613

CONSULTANTS

MAY 2015

CSO SATELLITE TREATMENT FACILITY CONTRACT NO. 1

OWNER

MATTOON

MATTOON, ILLINOIS: *Working Together to Build the Future*

CITY OF MATTOON

MATTOON, ILLINOIS

MARK	DATE	DESCRIPTION

PROJECT NO:	12078-03-00
CAD DWG FILE:	120780300-E-002.DWG
DESIGNED BY:	LDW
DRAWN BY:	DLB
CHECKED BY:	DJW
APPROVED BY:	TKB

COPYRIGHT: CRAWFORD, MURPHY & TILLY, INC. 2015

SHEET TITLE

ELECTRICAL STANDARD DETAILS AND NOTES

E-002

SHEET 104 OF 128

Path: J:\Mattoon\12078-03\Draw\Sheets\1-CSO Satellite Treatment\120780300-E-002.dwg
Date: Wednesday, June 17, 2015 12:04:02 PM

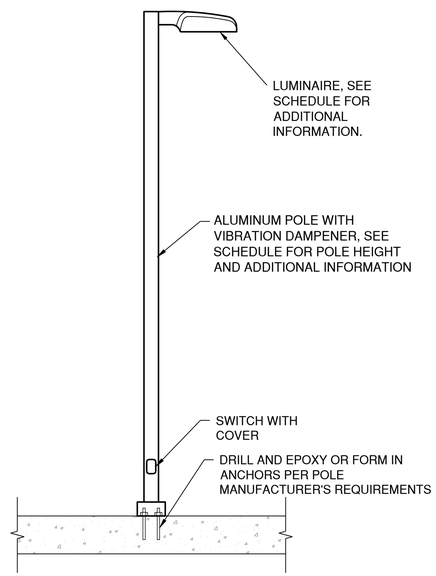

C1 FIXTURE DETAIL

N.T.S.

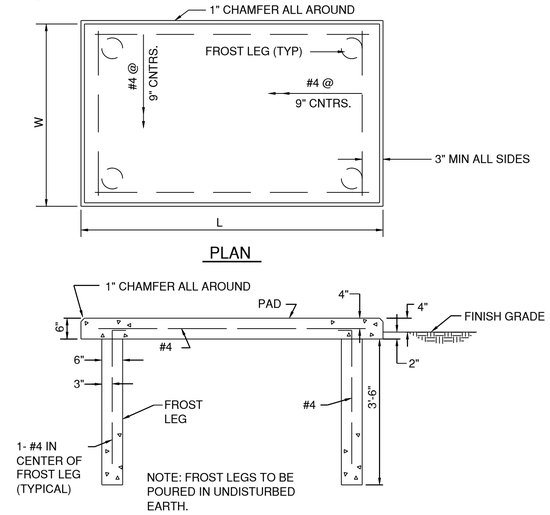

NOTES:

1. PAD MOUNTING BOLTS BY CONTRACTOR ACCORDING TO MANUFACTURERS RECOMMENDATIONS FOR ITS ENCLOSURE OR HOUSING.
2. MINIMUM CONCRETE COVERAGE OVER REBAR TO BE 3" UNLESS OTHERWISE NOTED.
3. PAD SHALL HAVE A 1'-0" MINIMUM PERIMETER AROUND THE GENERATOR SET BASE.
4. CONTRACTOR SHALL COORDINATE THE INSTALLATION OF CONDUITS IN THE PAD AS REQUIRED.
5. COORDINATE AND ADJUST GENERATOR PAD DIMENSIONS WITH EQUIPMENT SUPPLIER AS REQUIRED TO MAINTAIN PERIMETER MARGIN.

C3 GENERATOR SET/TRANSFORMER PAD DETAIL

N.T.S.

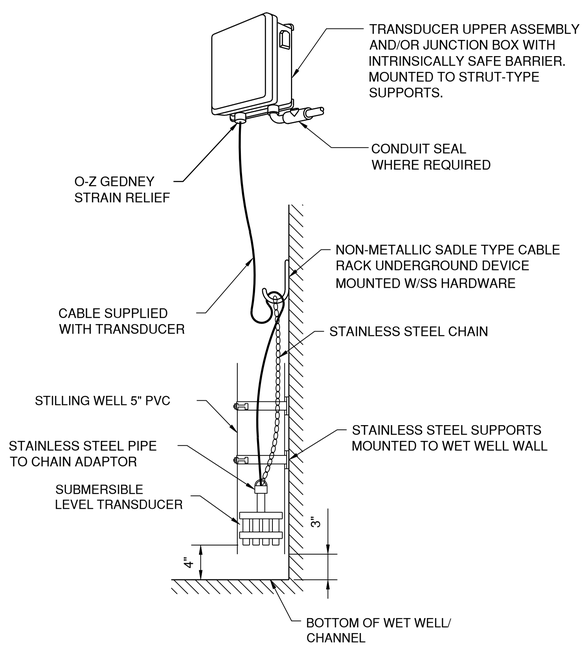

A1 SUBMERSIBLE LEVEL TRANSDUCER DETAIL

N.T.S.

CMT

License No. 184-000613

CONSULTANTS

MAY 2015

CSO SATELLITE TREATMENT FACILITY CONTRACT NO. 1

OWNER

MATTOON

MATTOON, ILLINOIS: *Working Together to Build the Future*

CITY OF MATTOON

MATTOON, ILLINOIS

MARK	DATE	DESCRIPTION

PROJECT NO:	12078-03-00
CAD DWG FILE:	120780300-E-003.DWG
DESIGNED BY:	LDW
DRAWN BY:	DLB
CHECKED BY:	DJW
APPROVED BY:	TJS

COPYRIGHT: CRAWFORD, MURPHY & TILLY, INC. 2015

SHEET TITLE

ELECTRICAL STANDARD DETAILS AND NOTES

E-003

SHEET 105 OF 128

Path: J:\Mattoon\12078-03\Draw\Sheets\1-CSO Satellite Treatment\120780300-E-003.dwg
Date: Wednesday, June 17, 2015 12:04:11 PM

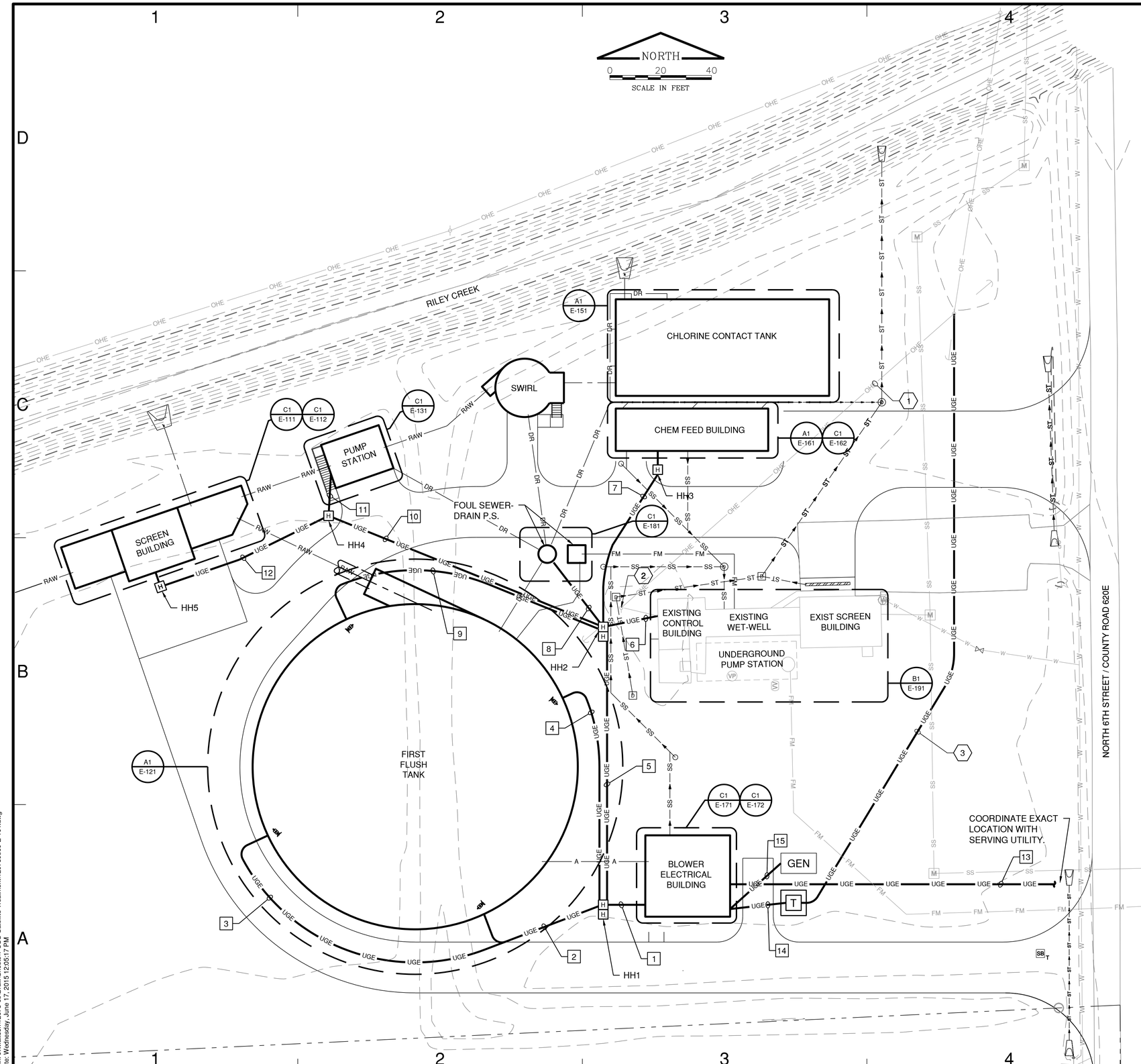

GENERAL NOTES

1. DUCT BANK ROUTINGS SHOWN ARE FOR INFORMATION ONLY. CONTRACTOR SHALL INSTALL DUCT BANKS TO AVOID EXISTING AND PROPOSED PIPING AND UTILITIES. SEE INDIVIDUAL STRUCTURES AND EQUIPMENT FOR INFORMATION ON SIZE OF CONDUITS, NUMBER OF CONDUITS AND CONDUIT CONTENTS IN EACH DUCT BANK.

2. UNLESS SPECIFICALLY NOTED OTHERWISE IN DRAWINGS, CIRCUITS POWERING DIFFERENT PIECES OF EQUIPMENT SHALL NOT BE COMBINED INTO ONE CONDUIT - EACH CIRCUIT SHALL BE INSTALLED IN INDIVIDUAL CONDUIT FROM EQUIPMENT TO SOURCE OF POWER. THIS INCLUDES ALL CONDUITS INSTALLED IN DUCT BANKS.

3. PER NEC, NO CONDUIT OR DUCT BANK RUN SHALL HAVE ANY MORE THAN 360 DEGREES OF TOTAL BENDS BETWEEN HANDHOLES. CONTRACTOR SHALL INSTALL ADDITIONAL HANDHOLES AS NECESSARY TO COMPLY WITH THESE REQUIREMENTS

4. THE LOCATION, SIZE AND TYPE OF MATERIAL OF EXISTING UNDERGROUND UTILITIES INDICATED ON THE PLANS IS NOT REPRESENTED AS BEING ACCURATE, SUFFICIENT OR COMPLETE. IT SHALL BE THE CONTRACTOR'S RESPONSIBILITY TO DETERMINE THE ACTUAL LOCATION OF ALL SUCH FACILITIES, INCLUDING SERVICE CONNECTIONS TO UNDERGROUND UTILITIES PRIOR TO CONSTRUCTION. THE CONTRACTOR SHALL NOTIFY THE UTILITY COMPANIES OF HIS OPERATIONAL PLANS AND SHALL OBTAIN FROM THE RESPECTIVE UTILITY COMPANIES DETAILED INFORMATION AND ASSISTANCE RELATIVE TO THE LOCATION OF THEIR FACILITIES AND THE WORKING SCHEDULE OF THE COMPANIES FOR REMOVAL OR ADJUSTMENT WHERE REQUIRED. IN THE EVENT AN UNEXPECTED UTILITY INTERFERENCE IS ENCOUNTERED DURING CONSTRUCTION, THE CONTRACTOR SHALL IMMEDIATELY NOTIFY THE UTILITY COMPANY OF JURISDICTION. THE OWNER AND ENGINEER SHALL ALSO BE IMMEDIATELY NOTIFIED. ANY SUCH MAINS AND SERVICES SHALL BE RESTORED TO SERVICE AT ONCE AND PAID FOR BY THE CONTRACTOR AT NO ADDITIONAL COST TO THE CONTRACT.

5. FOR THE "SQUARE" KEYED NOTES SEE ELECTRICAL SITE PLAN EXTERIOR DUCT BANK SCHEDULES FOR FURTHER INFORMATION.

KEYED NOTES

1. EXISTING OVERHEAD LINES TO BE REMOVED BY AMEREN.

2. EXISTING UTILITY POLE WITH 3-100 KVA TRANSFORMERS TO BE REMOVED BY AMEREN. CONTRACTOR TO REMOVE SECONDARY CABLES CT/PT CABINET AND METER.

3. 4" CONDUIT WITH PULL STRING, BURY 32" BELOW GRADE AND CONCRETE ENCASE FOR SERVING UTILITY PRIMARY VOLTAGE CABLE.

CMT

License No. 184-000613

CONSULTANTS

MAY 2015

CSO SATELLITE TREATMENT FACILITY CONTRACT NO. 1

OWNER

MATTOON

MATTOON, ILLINOIS: *Working Together to Build the Future*

CITY OF MATTOON

MATTOON, ILLINOIS

MARK	DATE	DESCRIPTION

PROJECT NO:	12078-03-00
CAD DWG FILE:	120780300-E-101.DWG
DESIGNED BY:	LDW
DRAWN BY:	DLB
CHECKED BY:	DJW
APPROVED BY:	TKB

COPYRIGHT: CRAWFORD, MURPHY & TILLY, INC. 2015

SHEET TITLE

ELECTRICAL SITE PLAN

E-101

SHEET 106 OF 128

Path: J:\Mattoon\12078-03\Draw\Sheets\1-CSO Satellite Treatment\120780300-E-101.dwg
Date: Wednesday, June 17, 2015 12:05:17 PM

EXTERIOR DUCT BANK SCHEDULE

RUN NO.	FROM	TO	CONDUIT SIZE	WIRE QTY	WIRE SIZE	WIRE TYPE	REMARKS
1	E BLDG	HH-1	1	3	#8	THWN	MIXER NO. 1 POWER FROM MCC
				1	#8	GND	
			1	2	#12	TWHN	MIXER NO. 1 THERMAL
				1	#12	GND	
			1	3	#8	THWN	MIXER NO. 4 POWER FROM MCC
				1	#8	GND	
			1	2	#12	TWHN	MIXER NO. 4 THERMAL
				1	#12	GND	
			1	3	#8	THWN	MIXER NO. 3 POWER FROM MCC
				1	#8	GND	
			1	2	#12	TWHN	MIXER NO. 3 THERMAL
				1	#12	GND	
			1	1	2/16	TSP	LIT-201 LEVEL SENSOR
			3	4	350KCMIL	THWN	480 VAC POWER FROM MDS PARALLEL FEED
				1	#1	GND	
			3	4	350KCMIL	THWN	480 VAC POWER FROM MDS PARALLEL FEED
				1	#1	GND	
			2	2	6 PAIR	FO	PLC FIBER OPTIC LOOP
			2 1/2	4	4/0	THWN	PP-2 FEEDER FROM MDS
				1	#4	GND	
			1	3	#8	THWN	FOUL SEWER PUMP NO. 1
				1	#8	GND	
			1	3	#8	THWN	FOUL SEWER PUMP NO. 2
				1	#8	GND	
			1	2	#12	THWN	PUMP 1 LEAK/OVERTEMP
				2	#12	THWN	PUMP 2 LEAK/OVERTEMP
				1	#12	GND	
			1	1	2/16	TSP	LIT-801 LEVEL SENSOR TO PLC-100
			1	2	#12	THWN	120 VAC CIR FOR FOUL PUMP STA
				1	#12	GND	LIT-301 AND LIGHT/RECEPTACLE
			2	2	#12	THWN	CV-801 MONITOR RELAY
				2	#12	THWN	CV-801 OPEN
				2	#12	THWN	CV-801 CLOSE
				2	#12	TSP	CV-801 OPENNED
				2	#12	THWN	CV-801 CLOSED
				2	#12	THWN	CV-801 ALARM
				2	#12	THWN	CV-802 MONITOR RELAY
				2	#12	THWN	CV-802 OPEN
				2	#12	THWN	CV-802 CLOSE
				2	#12	TSP	CV-802 OPENNED
				2	#12	THWN	CV-802 CLOSED
				2	#12	THWN	CV-802 ALARM
				2	#12	THWN	G-801 MONITOR RELAY
				2	#12	THWN	G-801 OPEN
				2	#12	THWN	G-801 CLOSE
				2	#12	TSP	G-801 OPENNED
				2	#12	THWN	G-801 CLOSED
				2	#12	THWN	G-801 ALARM
				2	#10	THWN	208VAC POWER
				1	#10	GND	
			1	3	#8	THWN	MIXER NO. 2 POWER FROM MCC
				1	#8	GND	
			1	2	#12	TWHN	MIXER NO. 2 THERMAL
				1	#12	GND	
			1	3	#8	THWN	INFLUENT PUMP NO. 1 POWER TO MCC
				1	#8	GND	
			1	3	#8	THWN	INFLUENT PUMP NO. 2 POWER TO MCC
				1	#8	GND	
			1	3	#8	THWN	INFLUENT PUMP NO. 3 POWER TO MCC
				1	#8	GND	
			1	3	#8	THWN	INFLUENT PUMP NO. 4 POWER TO MCC
				1	#8	GND	
			1	2	#12	TWHN	INFL PUMP NO 1 THERMAL TO MCC
				2	#12	TWHN	INFL PUMP NO 2 THERMAL TO MCC
				2	#12	TWHN	INFL PUMP NO 3 THERMAL TO MCC
				2	#12	TWHN	INFL PUMP NO 4 THERMAL TO MCC
				1	#12	GND	
			1	1	2/16	TSP	LIT-301 LEVEL SENSOR TO PLC-100
			1	2	#12	THWN	120 VAC CIR FOR PUMP STA
				1	#12	GND	LIT-301 AND LIGHT
			1	3	#10	THWN	SCREEN CONTROL PANEL POWER
				1	#10	GND	
			1	3	#10	THWN	SCREEN BLDG UH-1 POWER
				1	#10	GND	
			1	3	#8	THWN	MPC-1 POWER
				1	#8	GND	
			2			STRING	SPARE
			2			STRING	SPARE
			2			STRING	SPARE
			2			STRING	SPARE

EXTERIOR DUCT BANK SCHEDULE

RUN NO.	FROM	TO	CONDUIT SIZE	WIRE QTY	WIRE SIZE	WIRE TYPE	REMARKS
2	HH-1	M-204	1	3	#8	THWN	MIXER NO. 1 POWER FROM MCC
				1	#8	GND	
			1	2	#12	TWHN	MIXER NO. 1 THERMAL
				1	#12	GND	
			1	3	#8	THWN	MIXER NO. 4 POWER FROM MCC
				1	#8	GND	
			1	2	#12	TWHN	MIXER NO. 4 THERMAL
				1	#12	GND	
3	M-204	M-201	1	3	#8	THWN	MIXER NO. 1 POWER FROM MCC
				1	#8	GND	
			1	2	#12	TWHN	MIXER NO. 1 THERMAL
				1	#12	GND	
4	HH-1	M-203	1	3	#8	THWN	MIXER NO. 3 POWER FROM MCC
				1	#8	GND	
			1	2	#12	TWHN	MIXER NO. 3 THERMAL
				1	#12	GND	
			1	1	2/16	TSP	LIT-201 LEVEL SENSOR
5	HH-1	HH-2	3	4	350KCMIL	THWN	480 VAC POWER FROM MDP PARALLEL FEED
				1	#1	GND	
			3	4	350KCMIL	THWN	480 VAC POWER FROM MDP PARALLEL FEED
				1	#1	GND	
			2	2	6 PAIR	FO	PLC FIBER OPTIC LOOP
			2 1/2	4	4/0	THWN	PP-2 FEEDER FROM MDS
				1	#4	GND	
			1	3	#8	THWN	FOUL SEWER PUMP NO. 1
				1	#8	GND	
			1	3	#8	THWN	FOUL SEWER PUMP NO. 2
				1	#8	GND	
			1	2	#12	THWN	PUMP 1 LEAK/OVERTEMP
				2	#12	THWN	PUMP 2 LEAK/OVERTEMP
				1	#12	GND	
			1	1	2/16	TSP	LIT-801 LEVEL SENSOR TO PLC-100
			1	2	#12	THWN	120 VAC CIR FOR FOUL PUMP STA
				1	#12	GND	LIT-301 AND LIGHT/RECEPTACLE
			2	2	#12	THWN	CV-801 MONITOR RELAY
				2	#12	THWN	CV-801 OPEN
				2	#12	THWN	CV-801 CLOSE
				2	#12	TSP	CV-801 OPENNED
				2	#12	THWN	CV-801 CLOSED
				2	#12	THWN	CV-801 ALARM
				2	#12	THWN	CV-802 MONITOR RELAY
				2	#12	THWN	CV-802 OPEN
				2	#12	THWN	CV-802 CLOSE
				2	#12	TSP	CV-802 OPENNED
				2	#12	THWN	CV-802 CLOSED
				2	#12	THWN	CV-802 ALARM
				2	#12	THWN	G-801 MONITOR RELAY
				2	#12	THWN	G-801 OPEN
				2	#12	THWN	G-801 CLOSE
				2	#12	TSP	G-801 OPENNED
				2	#12	THWN	G-801 CLOSED
				2	#12	THWN	G-801 ALARM
				2	#10	THWN	208VAC POWER
				1	#10	GND	
			1	3	#8	THWN	MIXER NO. 2 POWER FROM MCC
				1	#8	GND	
			1	2	#12	TWHN	MIXER NO. 2 THERMAL
				1	#12	GND	
			1	3	#8	THWN	INFLUENT PUMP NO. 1 POWER TO MCC
				1	#8	GND	
			1	3	#8	THWN	INFLUENT PUMP NO. 2 POWER TO MCC
				1	#8	GND	
			1	3	#8	THWN	INFLUENT PUMP NO. 3 POWER TO MCC
				1	#8	GND	
			1	3	#8	THWN	INFLUENT PUMP NO. 4 POWER TO MCC
				1	#8	GND	
			1	2	#12	TWHN	INFL PUMP NO 1 THERMAL TO MCC
				2	#12	TWHN	INFL PUMP NO 2 THERMAL TO MCC
				2	#12	TWHN	INFL PUMP NO 3 THERMAL TO MCC
				2	#12	TWHN	INFL PUMP NO 4 THERMAL TO MCC
				1	#12	GND	
			1	1	2/16	TSP	LIT-301 LEVEL SENSOR TO PLC-100
			1	2	#12	THWN	120 VAC CIR FOR PUMP STA
				1	#12	GND	LIT-301 AND LIGHT
			1	3	#10	THWN	SCREEN CONTROL PANEL POWER
				1	#10	GND	
			1	3	#10	THWN	SCREEN BLDG UH-1 POWER
				1	#10	GND	
			1	3	#8	THWN	MPC-1 POWER
				1	#8	GND	
			2			STRING	SPARE
			2			STRING	SPARE
			2			STRING	SPARE
			2			STRING	SPARE

CMT

License No. 184-000613

CONSULTANTS

MAY 2015

CSO SATELLITE TREATMENT FACILITY CONTRACT NO. 1

OWNER

MATTOON

MATTOON, ILLINOIS: *Working Together to Build the Future*

CITY OF MATTOON

MATTOON, ILLINOIS

MARK	DATE	DESCRIPTION

PROJECT NO:	12078-03-00
CAD DWG FILE:	120780300-E-102.DWG
DESIGNED BY:	LDW
DRAWN BY:	DLB
CHECKED BY:	
APPROVED BY:	

COPYRIGHT: CRAWFORD, MURPHY & TILLY, INC. 2015

SHEET TITLE

ELECTRICAL SITE PLAN EXTERIOR DUCT BANK SCHEDULE

E-102

Path: J:\Mattoon\12078-03\Draw\Sheets\1-CSO Satellite Treatment\120780300-E-102.dwg
Date: Wednesday, June 17, 2015 12:05:31 PM

EXTERIOR DUCT BANK SCHEDULE

RUN NO.	FROM	TO	CONDUIT SIZE	WIRE QTY	WIRE SIZE	WIRE TYPE	REMARKS
6	HH-2	RCPS	3	4	350KCMIL	THWN	480 VAC POWER FROM MDP PARALLEL FEED
				1	#1	GND	
			3	4	350KCMIL	THWN	480 VAC POWER FROM MDP PARALLEL FEED
				1	#1	GND	
			2	2	6 PAIR	FO	PLC FIBER OPTIC LOOP
			2			STRING	SPARE
			2			STRING	SPARE
7	HH-2	HH-3	2 1/2	4	4/0	THWN	PP-2 FEEDER FROM MDP
				1	#4	GND	
			2	2	6 PAIR	FO	PLC FIBER OPTIC LOOP
			2			STRING	SPARE
			2			STRING	SPARE
8	HH-2	FOUL SEW	1	3	#8	THWN	FOUL SEWER PUMP NO. 1
				1	#8	GND	
			1	3	#8	THWN	FOUL SEWER PUMP NO. 2
				1	#8	GND	
			1	2	#12	THWN	PUMP 1 LEAK/OVERTEMP
				2	#12	THWN	PUMP 2 LEAK/OVERTEMP
				1	#12	GND	
			1	1	2/16	TSP	LIT-801 LEVEL SENSOR TO PLC-100
			1	2	#12	THWN	120 VAC CIR FOR FOUL PUMP STA
				1	#12	GND	LIT-801 AND LIGHT
			2	2	#12	THWN	CV-801 MONITOR RELAY
				2	#12	THWN	CV-801 OPEN
				2	#12	THWN	CV-801 CLOSE
				2	#12	TSP	CV-801 OPENNED
				2	#12	THWN	CV-801 CLOSED
				2	#12	THWN	CV-801 ALARM
				2	#12	THWN	CV-802 MONITOR RELAY
				2	#12	THWN	CV-802 OPEN
				2	#12	THWN	CV-802 CLOSE
				2	#12	TSP	CV-802 OPENNED
				2	#12	THWN	CV-802 CLOSED
				2	#12	THWN	CV-802 ALARM
				2	#12	THWN	G-801 MONITOR RELAY
				2	#12	THWN	G-801 OPEN
				2	#12	THWN	G-801 CLOSE
				2	#12	TSP	G-801 OPENNED
				2	#12	THWN	G-801 CLOSED
				2	#12	THWN	G-801 ALARM
				2	#10	THWN	208VAC POWER
				1	#10	GND	
9	HH-2	M-202	1	3	#8	THWN	MIXER NO. 2 POWER FROM MCC
				1	#8	GND	
			1	2	#12	TWHN	MIXER NO. 2 THERMAL
				1	#12	GND	
10	HH-2	HH-4	1	3	#8	THWN	INFLUENT PUMP NO. 1 POWER TO MCC
				1	#8	GND	
			1	3	#8	THWN	INFLUENT PUMP NO. 2 POWER TO MCC
				1	#8	GND	
			1	3	#8	THWN	INFLUENT PUMP NO. 3 POWER TO MCC
				1	#8	GND	
			1	3	#8	THWN	INFLUENT PUMP NO. 4 POWER TO MCC
				1	#8	GND	
			1	2	#12	TWHN	INFL PUMP NO 1 THERMAL TO MCC
				2	#12	TWHN	INFL PUMP NO 2 THERMAL TO MCC
				2	#12	TWHN	INFL PUMP NO 3 THERMAL TO MCC
				2	#12	TWHN	INFL PUMP NO 4 THERMAL TO MCC
				1	#12	GND	
			1	1	2/16	TSP	LIT-301 LEVEL SENSOR TO PLC-100
			1	2	#12	THWN	120 VAC CIR FOR PUMP STA
				1	#12	GND	LIT-301 AND LIGHT/RECEPTACLE
			1	3	#10	THWN	SCREEN CONTROL PANEL POWER
				1	#10	GND	
			1	3	#10	THWN	SCREEN BLDG UH-1 POWER
				1	#10	GND	
			2	2	6 PAIR	FO	PLC FIBER OPTIC LOOP
			1	3	#8	THWN	MPC-1 POWER
				1	#8	GND	
			2			STRING	SPARE
			2			STRING	SPARE
			2			STRING	SPARE
			2			STRING	SPARE

EXTERIOR DUCT BANK SCHEDULE

RUN NO.	FROM	TO	CONDUIT SIZE	WIRE QTY	WIRE SIZE	WIRE TYPE	REMARKS
11	HH4	PUMP STA	1	3	#8	THWN	INFLUENT PUMP NO. 1 POWER TO MCC
				1	#8	GND	
			1	3	#8	THWN	INFLUENT PUMP NO. 2 POWER TO MCC
				1	#8	GND	
			1	3	#8	THWN	INFLUENT PUMP NO. 3 POWER TO MCC
				1	#8	GND	
			1	3	#8	THWN	INFLUENT PUMP NO. 4 POWER TO MCC
				1	#8	GND	
			1	2	#12	TWHN	INFL PUMP NO 1 THERMAL TO MCC
				2	#12	TWHN	INFL PUMP NO 2 THERMAL TO MCC
				2	#12	TWHN	INFL PUMP NO 3 THERMAL TO MCC
				2	#12	TWHN	INFL PUMP NO 4 THERMAL TO MCC
				1	#12	GND	
			1	1	2/16	TSP	LIT-301 LEVEL SENSOR TO PLC-100
			1	2	#12	THWN	120 VAC CIR FOR PUMP STA
				1	#12	GND	LIT-301 AND LIGHT/RECEPTACLE
			1 1/2	2	#12	THWN	CV-301 MONITOR RELAY
				2	#12	THWN	CV-301 OPEN
				2	#12	THWN	CV-301 CLOSE
				2	#12	TSP	CV-301 OPENNED
				2	#12	THWN	CV-301 CLOSED
				2	#12	THWN	CV-301 ALARM
				2	#10	THWN	208VAC POWER
				1	#10	GND	
12	HH4	HH5	1	3	#10	THWN	SCREEN CONTROL PANEL POWER
				1	#10	GND	
			1	3	#10	THWN	SCREEN BLDG UH-1 POWER
				1	#10	GND	
			2	2	6 PAIR	FO	PLC FIBER OPTIC LOOP
			1	3	#8	THWN	MPC-1 POWER
				1	#8	GND	
			1 1/2	2	#12	THWN	CV-301 MONITOR RELAY
				2	#12	THWN	CV-301 OPEN
				2	#12	THWN	CV-301 CLOSE
				2	#12	TSP	CV-301 OPENNED
				2	#12	THWN	CV-301 CLOSED
				2	#12	THWN	CV-301 ALARM
				2	#10	THWN	208VAC POWER
				1	#10	GND	
			2			STRING	SPARE
			2			STRING	SPARE
13	ELEC BLD	ROW	2			STRING	INTERNET ACCESS
14	UTIL TRANS	ELECT BLD	3	4	350KCMIL	THWN	PARALLEL POWER
			3	4	350KCMIL	THWN	PARALLEL POWER
			3	4	350KCMIL	THWN	PARALLEL POWER
			3	4	350KCMIL	THWN	PARALLEL POWER
15	GEN SET	ELECT BLD	3	4	350KCMIL	THWN	PARALLEL POWER
					#3/0	GND	
			3	4	350KCMIL	THWN	PARALLEL POWER
					#3/0	GND	
			3	4	350KCMIL	THWN	PARALLEL POWER
					#3/0	GND	
			3	4	350KCMIL	THWN	PARALLEL POWER
					#3/0	GND	
			1	2	#10	THWN	GEN HOUSE POWER
				1	#10	GND	
			1	2	#12	THWN	ATS START SIGNAL
				2	#12	THWN	SPARE
				1	#12	GND	
			1	1	MNFR CABLE		REMOTE ANNUNCIATION

CMT

License No. 184-000613

CONSULTANTS

MAY 2015

CSO SATELLITE TREATMENT FACILITY CONTRACT NO. 1

OWNER

MATTOON

MATTOON, ILLINOIS: *Working Together to Build the Future*

CITY OF MATTOON

MATTOON, ILLINOIS

MARK	DATE	DESCRIPTION

PROJECT NO: 12078-03-00

CAD DWG FILE: 120780300-E-102.DWG

DESIGNED BY: LDW

DRAWN BY: DLB

CHECKED BY: DJW

APPROVED BY: TJB

COPYRIGHT: CRAWFORD, MURPHY & TILLY, INC. 2015

SHEET TITLE

ELECTRICAL SITE PLAN EXTERIOR DUCT BANK SCHEDULE

E-103

SHEET 108 OF 128

Path: J:\Mattoon\12078-03\Draw\Sheets\1-CSO Satellite Treatment\120780300-E-102.dwg
Date: Wednesday, June 17, 2015 12:05:32 PM

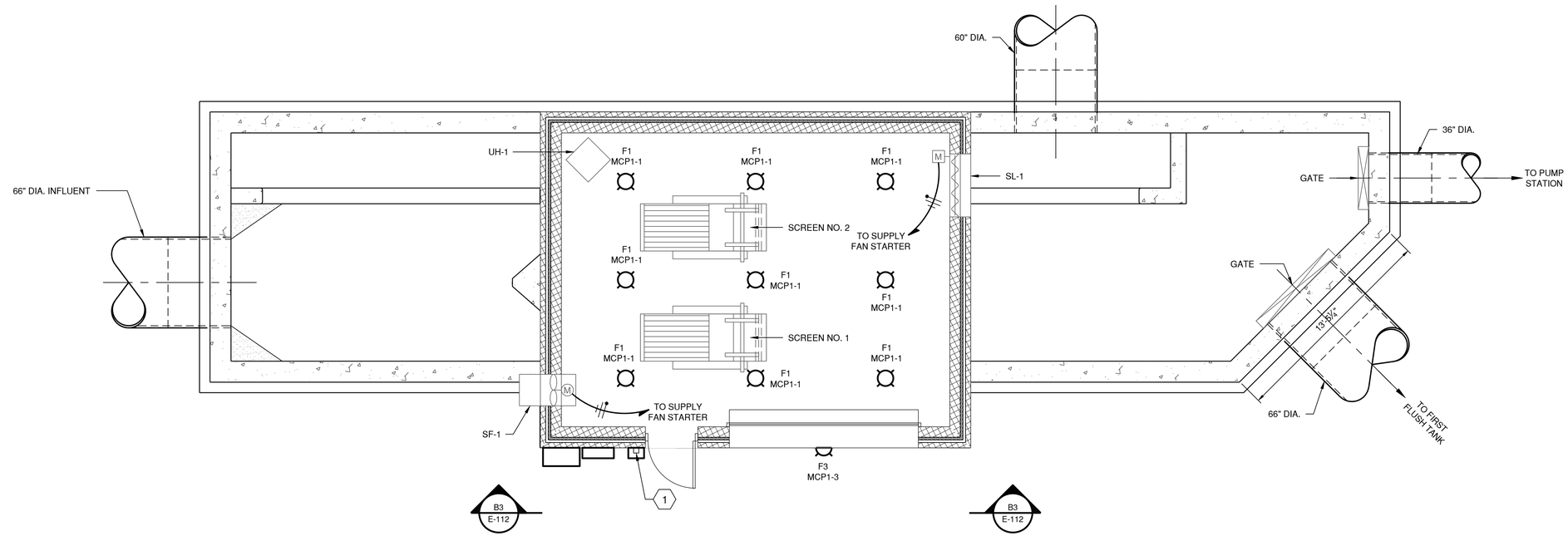

C1 LIGHTING PLAN VIEW

1/4"=1-0"

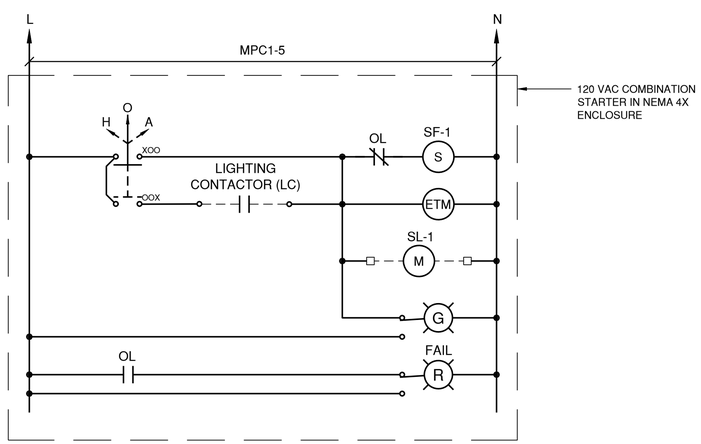

A1 SUPPLY FAN STARTER SCHEMATIC

N.T.S.

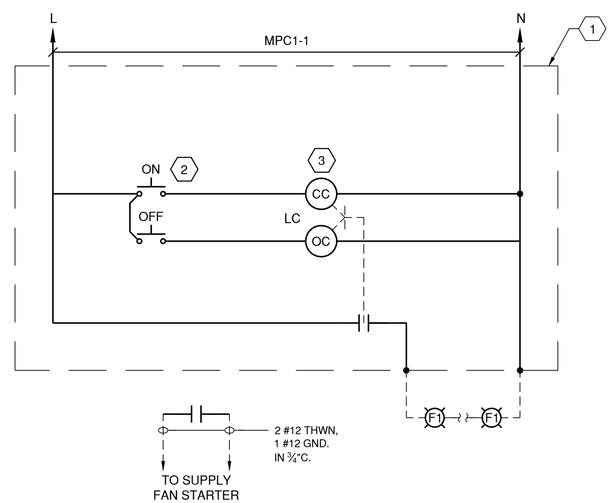

A3 LIGHTING CONTROL STATION SCHEMATIC

N.T.S.

GENERAL NOTES

1. THE INTERIOR OF THE SCREEN BUILDING IS CLASSIFIED AS CLASS 1 DIVISION 1 GROUP D HAZARDOUS LOCATION. ALL ELECTRICAL INSTALLATIONS IN THIS AREA SHALL BE RATED FOR THIS ENVIRONMENT AND INSTALLED IN ACCORDANCE WITH THE NEC.
2. LIGHTING SHALL BE INSTALLED IS SUCH A FASHION AS TO OPTIMIZE LIGHTING OUTPUT.
3. ALL LIGHTING CONDUIT AND WIRING SHALL BE 2 #12 THWN, 1 #12 GND. IN ¾"C.

KEYED NOTES

1. NEMA 4X ENCLOSURE MOUNTED EXTERIOR OF BUILDING BY THE MAN DOOR. LABEL "TURN ON LIGHTS/FAN PRIOR TO ENTERING BUILDING"
2. NEMA 4X MOMENTARY CONTACT PUSHBUTTON UNITS, NON ILLUMINATED ALLEN BRADLEY 800H SERIES OR EQUAL MOUNTED ON EXTERIOR OF ENCLOSURE. LABEL "ON" AND "OFF" RESPECTIVELY.
3. MECHANICALLY HELD CONTACTOR 30 AMP, 4 POLE, 120 VAC SQUARE D LXO40 OR EQUAL.

CMT

License No. 184-000613

CONSULTANTS

MAY 2015

CSO SATELLITE TREATMENT FACILITY CONTRACT NO. 1

OWNER

MATTOON

MATTOON, ILLINOIS: *Working Together to Build the Future*

CITY OF MATTOON

MATTOON, ILLINOIS

MARK	DATE	DESCRIPTION

PROJECT NO:	12078-03-00
CAD DWG FILE:	120780300-E-111.DWG
DESIGNED BY:	LDW
DRAWN BY:	DLB
CHECKED BY:	DJW
APPROVED BY:	TJS

COPYRIGHT: CRAWFORD, MURPHY & TILLY, INC. 2015

SHEET TITLE

SCREEN BUILDING LIGHTING PLAN

E-111

SHEET 109 OF 128

Path: J:\Mattoon\12078-03\Draw\Sheets\1-CSO Satellite Treatment\120780300-E-111.dwg
Date: Wednesday, June 17, 2015 12:05:48 PM

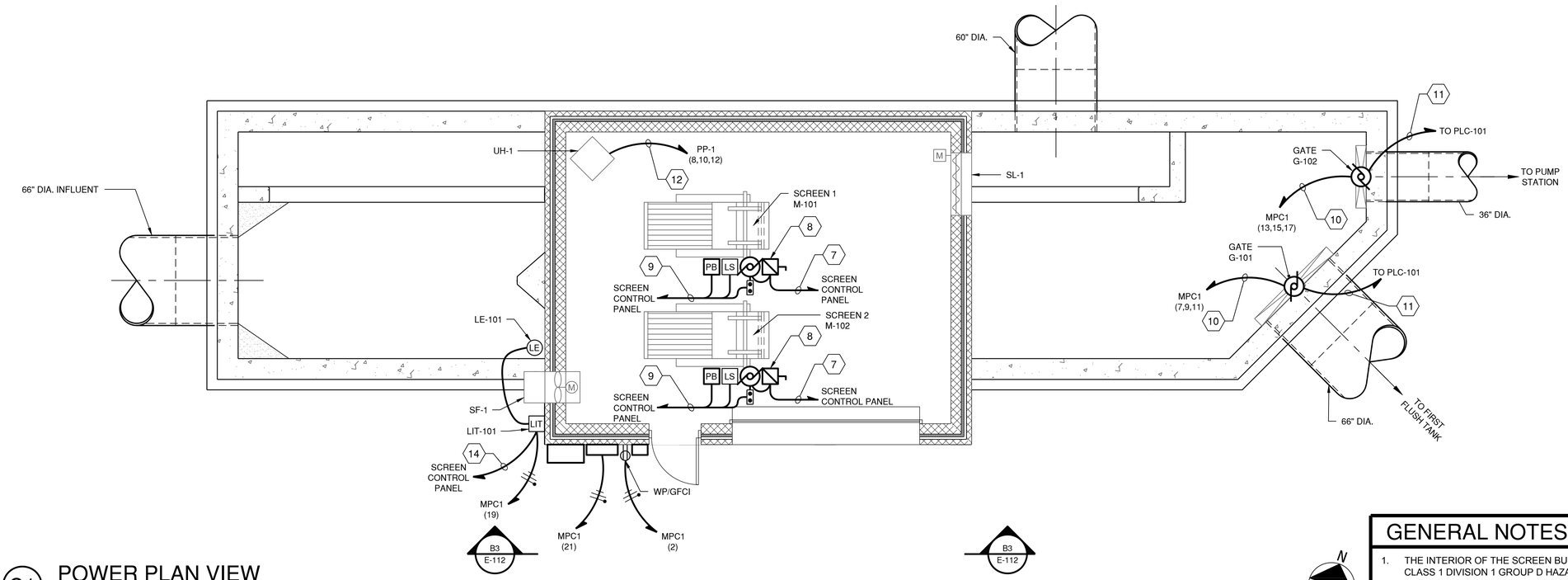

C1 POWER PLAN VIEW

1/4"=1-0"

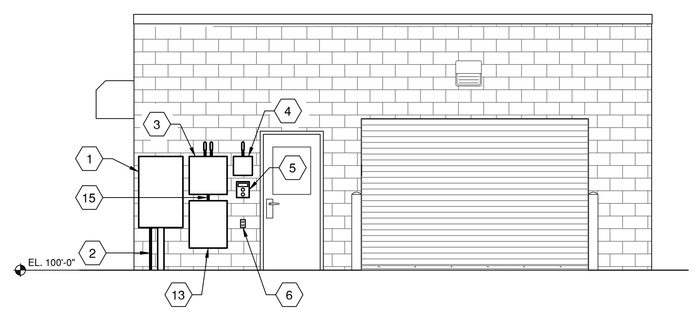

B3 ELEVATION

1/4"=1-0"

GENERAL NOTES

1. THE INTERIOR OF THE SCREEN BUILDING IS CLASSIFIED AS CLASS 1 DIVISION 1 GROUP D HAZARDOUS LOCATION. ALL ELECTRICAL INSTALLATIONS IN THIS AREA SHALL BE RATED FOR THIS ENVIRONMENT AND INSTALLED IN ACCORDANCE WITH THE NEC.
2. PROVIDE EXPLOSION PROOF FLEXIBLE CONDUIT 18" MINIMUM FOR EACH SCREEN MOTOR. NOT ALL WIRING IS SHOWN FOR CLARITY. SEE CONTROL SCHEMATICS FOR FURTHER INFORMATION.

KEYED NOTES

1. MINI POWER CENTER NUMBER 1 (MPC1), 15KVA, 480 VAC PRIMARY, 208Y/120VAC, 3 PHASE, 24 POLE IN NEMA 3R RATED ENCLOSURE.
2. #8 THWN GREEN ELECTRODE GROUND CONDUCTOR IN 3/4IN SCHEDULE 40 PVC CONDUIT TO 12IN BELOW GRADE. PROVIDE 10' BY 3/4IN COPPER CLAD STEEL GROUND ROD BURIED 12IN BELOW GRADE IN UNDISTURBED DIRT AND EXOTHERMIC WELD THE GROUND CONNECTION.
3. SCREEN CONTROL PANEL IN NEMA 4X ENCLOSURE.
4. SUPPLY FAN ENCLOSED FULL VOLTAGE MAGNETIC COMBINATION MOTOR STARTER 120 VAC, SIZE 0, IN NEMA 4X ENCLOSURE. SEE STARTER SCHEMATIC FOR FURTHER DETAILS.
5. LIGHTING CONTROL STATION RATED NEMA 4X
6. RECEPTACLE, GFCI AND WEATHER PROOF WHILE IN USE COVER.
7. 3 #12 THWN (480 VAC) 1 #12 GND IN 3/4" CONDUIT TO SCREEN CONTROL PANEL
8. MANUAL MOTOR SWITCH, STANDARD 3 POLE, IN NEMA 7 ENCLOSURE WITH PADLOCKING PROVISIONS, SQUARE D KR2 OR EQUAL.
9. 2 #12 THWN (LOCAL MOTOR CONTROL), 2 #12 THWN (SHEER PIN), 2 #12 THWN (EMERGENCY STOP PUSHBUTTON), 4 #12 SPARE, 1 #12 GND IN 1" CONDUIT TO SCREEN CONTROL PANEL.
10. 3 #10 THWN (208 VAC POWER), 1 #10 GND IN 1" CONDUIT TO MPC1.
11. 2 #10 THWN (GATE CLOSED LIMIT), 2 #10 THWN (GATE OPEN LIMIT), 2 #10 (GATE ENABLE), 2 #10 SPARE, 2/C #16 SHIELDED TWISTED PAIR (STP) (OPEN/CLOSE), 2/C #16 STP (GATE POSITION), 1 #10 GND IN 1-1/2" C TO PLC-101.
12. 3 #10THWN (480VAC), 1 #10 GND IN 1" CONDUIT TO PP-1.
13. PLC-101 (HEADWORKS) IN NEMA 4X ENCLOSURE.
14. 1-2/C #16 TWISTED SHIELDED PAIR IN ¾"C.
15. 12 #14 THWN, 3 #12 THWN SPARE, 1 #14 GND. IN ¾"C.

CMT

License No. 184-000613

CONSULTANTS

MAY 2015

CSO SATELLITE TREATMENT FACILITY CONTRACT NO. 1

OWNER

MATTOON

MATTOON, ILLINOIS: *Working Together to Build the Future*

CITY OF MATTOON

MATTOON, ILLINOIS

MARK	DATE	DESCRIPTION

PROJECT NO:	12078-03-00
CAD DWG FILE:	120780300-E-112.DWG
DESIGNED BY:	LDW
DRAWN BY:	DLB
CHECKED BY:	DJW
APPROVED BY:	TFK

COPYRIGHT: CRAWFORD, MURPHY & TILLY, INC. 2015

SHEET TITLE

SCREEN BUILDING POWER PLAN

E-112

SHEET 110 OF 128

Path: J:\Mattoon\12078-03\Draw\Sheets\1-CSO Satellite Treatment\120780300-E-112.dwg
Date: Wednesday, June 17, 2015 12:06:03 PM

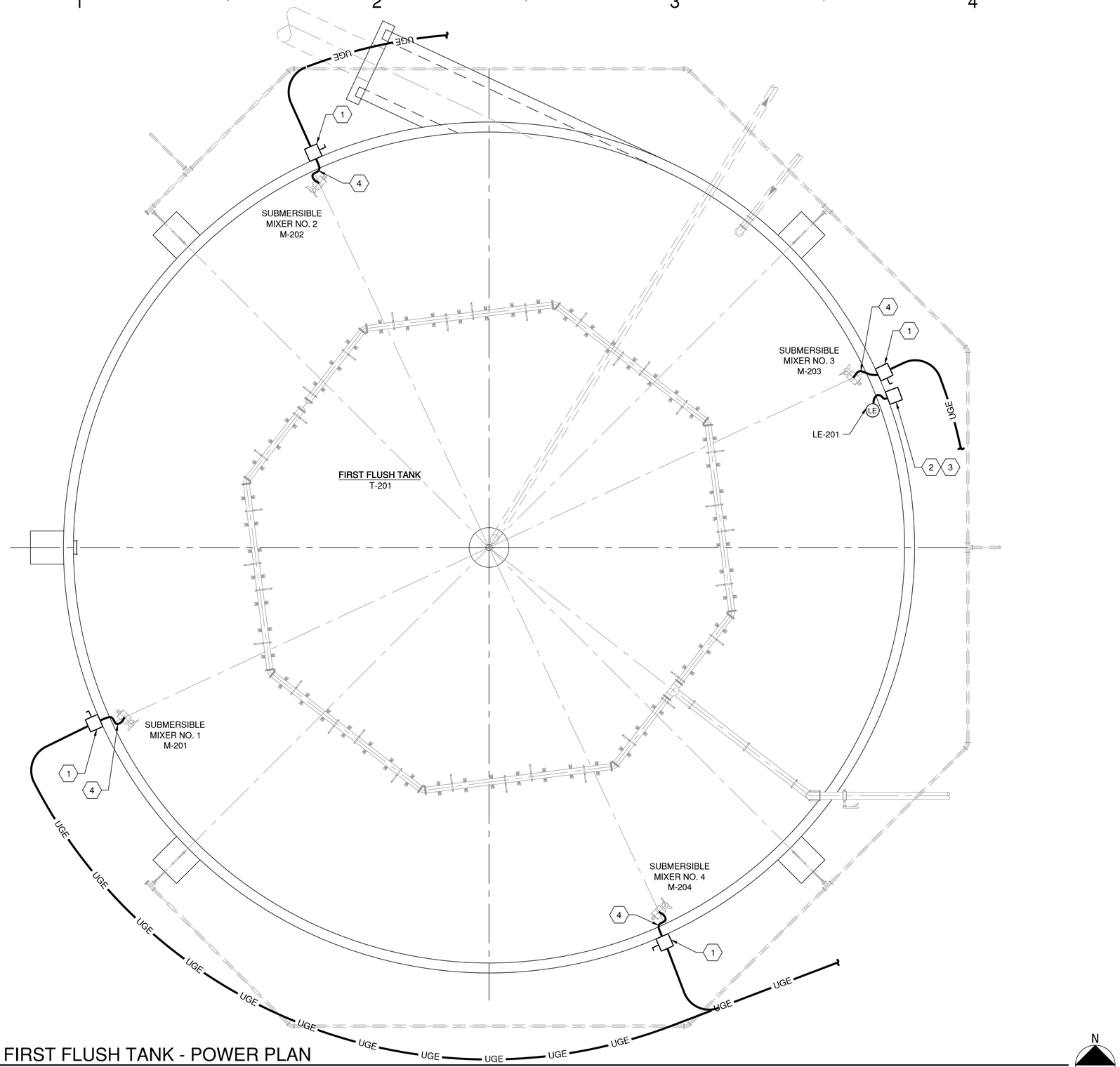

A1 FIRST FLUSH TANK - POWER PLAN

1/8"=1'-0"

KEYED NOTES

1. 60 AMP, 600 VAC, 3 POLE, NON-FUSED, HEAVY DUTY SAFETY SWITCH IN NEMA 4X ENCLOSURE. MOUNT 5'-0" A.F.G.
2. INTRINSICALLY SAFE BARRIER IN NEMA 4X JUNCTION BOX MOUNTED 18" MINIMUM ABOVE TANK WALL.
3. LEVEL INDICATING DISPLAY MOUNTED ABOVE JUNCTION BOX APPROXIMATELY 5'-0" ABOVE FINISHED GRADE. INCLUDE SUN SHIELD.
4. SUBMERSIBLE MIXER MANUFACTURERS "SO" CABLE. PROVIDE GLAND AT SAFETY SWITCH TO MAINTAIN THE SAFETY SWITCH NEMA 4X RATING AND CABLE STRAIN RELIEF.

GENERAL NOTES

1. FIRST FLUSH TANK HAS A CLASS 1, DIVISION 2, GROUP D CLASSIFIED AREA ABOVE THE WATER TO 18" ABOVE THE TOP OF THE WALL, 18" OUT FROM WALL AND 18" OUT 10 FEET FROM WALL.
2. THE LEVEL ELEMENT (PRESSURE TRANSDUCER) SHALL BE INSTALLED IN A STILLING WELL. SEE SUBMERSIBLE LEVEL TRANSDUCER DETAIL FOR FURTHER INFORMATION.

CMT

License No. 184-000613

CONSULTANTS

MAY 2015

CSO SATELLITE
TREATMENT FACILITY
CONTRACT NO. 1

OWNER

MATTOON

MATTOON, ILLINOIS: *Working Together to Build the Future*

CITY OF MATTOON

MATTOON, ILLINOIS

MARK	DATE	DESCRIPTION

PROJECT NO:	12078-03-00
CAD DWG FILE:	120780300-E-121.DWG
DESIGNED BY:	LDW
DRAWN BY:	DLB
CHECKED BY:	LDW
APPROVED BY:	TKB

COPYRIGHT: CRAWFORD, MURPHY & TILLY, INC. 2015

SHEET TITLE

FIRST FLUSH TANK
PROCESS POWER
PLAN

E-121

SHEET 111 OF 128

Path: J:\Mattoon\12078-03\Draw\Sheets\1-CSO Satellite Treatment\120780300-E-121.dwg
Date: Wednesday, June 17, 2015 12:06:18 PM

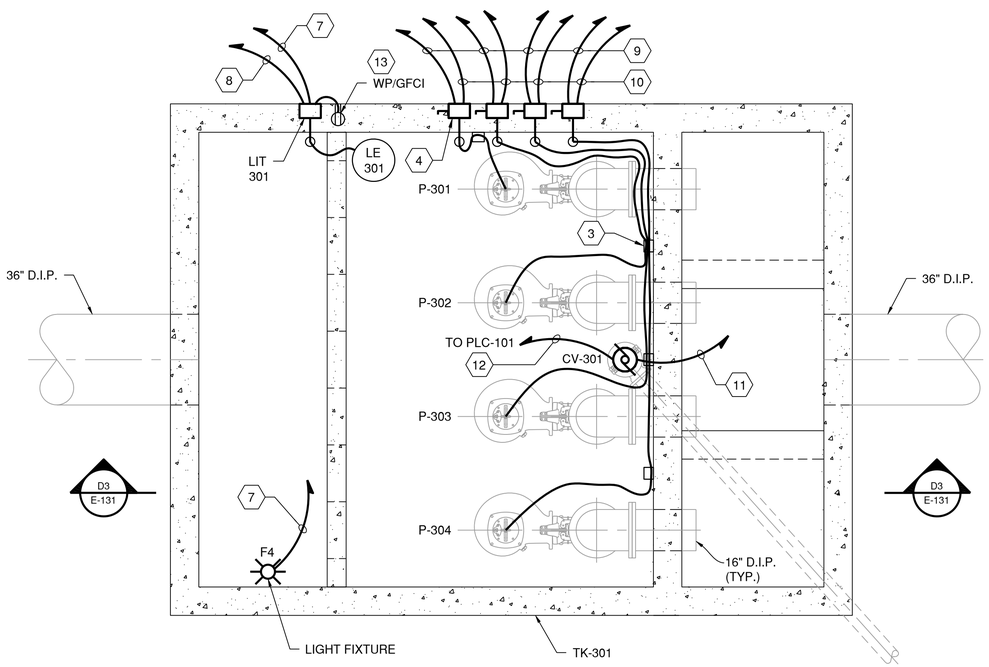

C1 INFLUENT PUMP STATION - POWER PLAN VIEW

3/8"=1'-0"

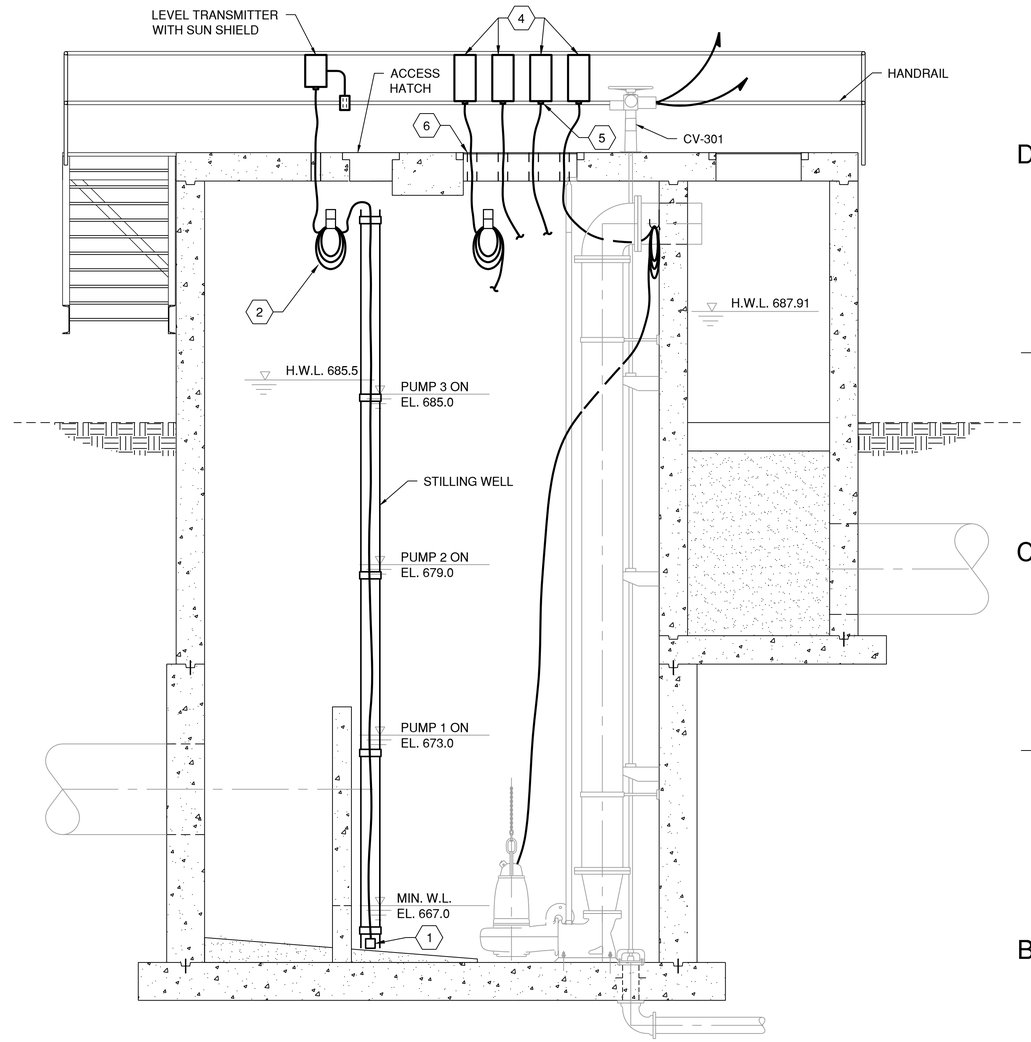

B3 INFLUENT PUMP STATION - SECTION

3/8"=1'-0"

GENERAL NOTES

1. THE INTERIOR OF THE INFLUENT PUMP STATION IS CLASSIFIED AS CLASS 1 DIVISION 1 GROUP D HAZARDOUS LOCATION. ALL ELECTRICAL INSTALLATIONS IN THIS AREA SHALL BE RATED FOR THIS ENVIRONMENT AND INSTALLED IN ACCORDANCE WITH THE NEC.

KEYED NOTES

1. LEVEL TRANSDUCER. SEE SUBMERSIBLE LEVEL TRANSDUCER DETAIL FOR FURTHER INFORMATION.
2. MANUFACTURERS CABLE (TYPICAL).
3. NON METALLIC SADDLE TYPE CABLE RACK (TYPICAL).
4. 60AMP, 600 VAC, 3 POLE, NON-FUSED HEAVY DUTY SAFETY SWITCH IN NEMA 4X ENCLOSURE (TYPICAL FOR EACH PUMP)
5. PROVIDE CABLE GLAND FOR PUMP POWER AND CONTROL CABLES. COORDIANTE CABLE GLAND SIZING WITH CHOSEN PUMP MANUFACTURE TO MAINTAIN THE ENCLOSURES NEMA 4X RATING (TYPICAL FOR EACH PUMP)
6. CORE DRILL TOP OF SLAB TO ALLOW MANUFACTURERS CABLE TO EXIT THE WET WELL. VAPOR SEAL OPENING UPON COMPLETION OF STARTUP AND TESTING (TYPICAL).
7. 2 #12 THWN (120VAC), 1 #12 GND IN 1" CONDUIT TO LP-1 AT ELECT BUILDING.
8. 2/C #16 TWISTED SHIELDED PAIR IN 1" C FROM LEVEL TRANSMITTER TO PLC-100.
9. 3 #8 THWN (480VAC), 1 #8 GND IN 1" CONDUIT TO MCC-1 IN BLOWER/ELECTRICAL BUILDING.
10. 2 #12 THWN (SEAL LEAK AND OVERTEMP), 1 #12 GND IN 1" CONDUIT TO MCC-1.
11. 2 #10 THWN (208VAC POWER), 1 #10 GND IN 1" CONDUIT TO MPC-1 AT SCREEN BLDG.
12. 2 #12 THWN (VALVE ENABLE), 2 #12 THWN (VALVE OPEN), 2 #12 THWN (VALVE CLOSE), 2 #12 THWN (VALVE OPENED), 2 #12 THWN (VALVE CLOSED) 2 #12 THWN (ALARM), 1 #12 GND IN 1-1/2" CONDUIT TO PLC-101.
13. RECEPTACLE, GFCI WITH WEATHER PROOF WHILE IN USE COVER.

CMT

License No. 184-000613

CONSULTANTS

MAY 2015

CSO SATELLITE TREATMENT FACILITY CONTRACT NO. 1

OWNER

MATTOON

MATTOON, ILLINOIS: *Working Together to Build the Future*

CITY OF MATTOON

MATTOON, ILLINOIS

MARK	DATE	DESCRIPTION

PROJECT NO:	12078-03-00
CAD DWG FILE:	120780300-E-131.DWG
DESIGNED BY:	LDW
DRAWN BY:	DLB
CHECKED BY:	DW
APPROVED BY:	TKB

COPYRIGHT: CRAWFORD, MURPHY & TILLY, INC. 2015

SHEET TITLE

INFLUENT PUMP STATION POWER PLAN

E-131

SHEET 112 OF 128

Path: J:\Mattoon\12078-03\Draw\Sheets\1-CSO Satellite Treatment\120780300-E-131.dwg
Date: Wednesday, June 17, 2015 12:06:33 PM

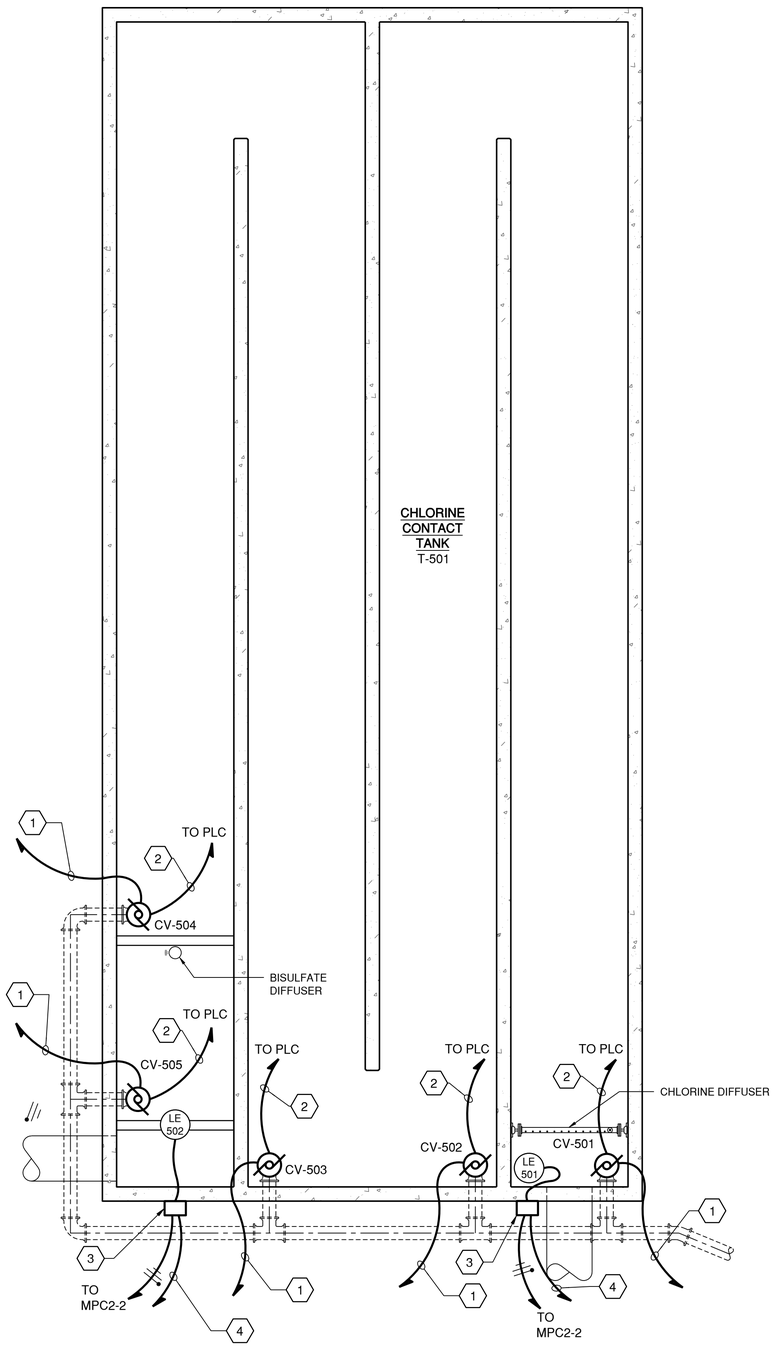

A1 CHLORINE CONTACT TANK - POWER PLAN

3/16"=1'-0"

0 1' 2' 3'

N

GENERAL NOTES

1. 120 VAC POWER TO LE-501, LE-502 AND MAY BE ONE HOME RUN.
2. CONTROL CONDUCTORS MAY BE COMBINED INTO ONE CONDUIT TO PLC-102.
3. THE LEVEL ELEMENT (PRESSURE TRANSDUCER) SHALL BE INSTALLED IN A STILLING WELL. SEE SUBMERSIBLE LEVEL TRANSDUCER DETAIL FOR FURTHER INFORMATION.

KEYED NOTES

1. 2 - #10 THWN (208VAC POWER), 1 #10 GND IN 1" CONDUIT TO MPC-2 AT CHLORINE BLDG.
2. 2 #12 THWN (VALVE ENABLE), 2 #12 THWN (VALVE OPEN), 2 #12 THWN (VALVE CLOSE), 2 #12 THWN (VALVE OPENED), 2 #12 THWN (VALVE CLOSED) 2 #12 THWN (ALARM), 1 #12 GND IN 1-1/2" CONDUIT TO PLC-102.
3. LEVEL INDICATING TRANSMITTER MOUNT ON TANK WALL ABOUT 4'-0" ABOVE FINISHED GRADE.
4. 2/C #16 SHIELDED TWISTED PAIR IN 1" CONDUIT TO PLC-102.

CMT

License No. 184-000613

CONSULTANTS

MAY 2015

CSO SATELLITE
TREATMENT FACILITY
CONTRACT NO. 1

OWNER

MATTOON

MATTOON, ILLINOIS: *Working Together to Build the Future*

CITY OF MATTOON

MATTOON, ILLINOIS

MARK	DATE	DESCRIPTION

PROJECT NO:	12078-03-00
CAD DWG FILE:	120780300-E-151.DWG
DESIGNED BY:	LDW
DRAWN BY:	DLB
CHECKED BY:	DW
APPROVED BY:	TAB

COPYRIGHT: CRAWFORD, MURPHY & TILLY, INC. 2015

SHEET TITLE

CHLORINE CONTACT
TANK POWER PLAN

E-151

SHEET 113 OF 128

Path: J:\Mattoon\12078-03\Draw\Sheets\1-CSO Satellite Treatment\120780300-E-151.dwg
Date: Wednesday, June 17, 2015 12:06:46 PM

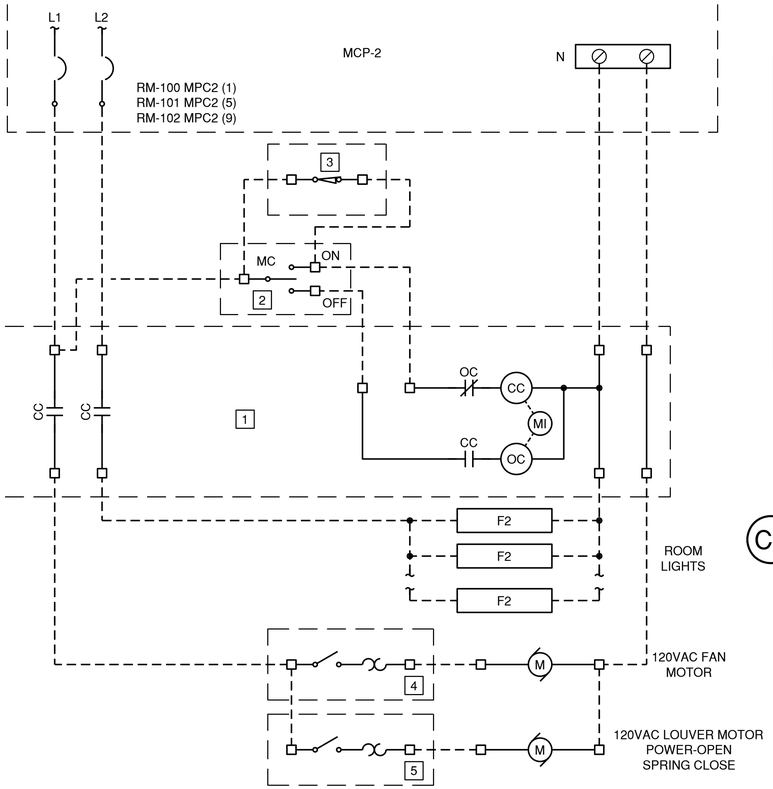

NOMENCLATURE

1. 2-POLE, 30 AMP, MECHANICALLY-HELD CONTACTOR, 120 VAC COILS, IN NEMA 4X NON-METALLIC ENCLOSURE, SQUARE D CLASS 8903 TYPE LXWW20-V02. (LOCATED BY ROOM'S 100, 101 & 102).
2. MOMENTARY CONTACT/SINGLE-POLE, DOUBLE-THROW, SPRING-RETURN TO CENTER TOGGLE-SWITCH IN WEATHERPROOF ENCLOSURE.
3. 120 VAC CAPACITIVE PROXIMITY LIMIT-SWITCH MOUNTED AT CHLORINE & BIOSULFITE FEED ROOM DOORS. WIRE FOR N.C. CONTACT WHEN DOOR IS OPEN. SEE SPECIFICATIONS 16902.
4. FRACTIONAL H.P. MANUAL MOTOR STARTERS IN NEMA 4 ENCLOSURE. MOUNT 5'-0" AFF NEAR FAN & LOUVER.
5. FRACTIONAL H.P. MANUAL MOTOR STARTERS IN NEMA 4 ENCLOSURE. INTEGRAL TO EXHAUST FAN.

FAN/LIGHT CONTROL SCHEMATIC
CHLOR STORAGE RM 100 - EF-4 & SL-5
CHLOR FEED RM 101 - EF-2 & SL-3
BISULFATE RM 102 - EF-3 & SL-4

A1

N.T.S.

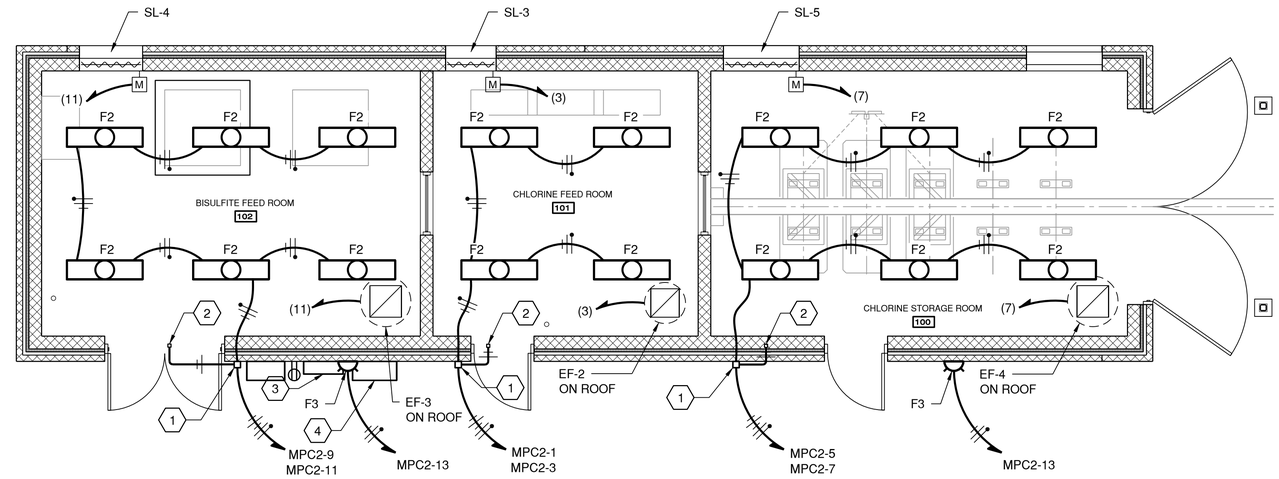

C3 CHEMICAL FEED BUILDING - LIGHTING PLAN VIEW

1/4"=1'-0"

N

0 2' 4' 8'

GENERAL NOTES

1. THE INTERIOR OF THE BISULFATE ROOM 102, CHLORINE FEED ROOM 101 AND CHLORINE STORAGE ROOM 100 IS A CORROSIVE ENVIRONMENT, THEREFOR ALL ABOVE GRADE CONDUIT IN THIS AREA SHALL BE SCHEDULE 40 PVC OR PVC COATED LIQUID TIGHT FLEXIBLE METAL CONDUIT.
2. FIXTURES SHALL BE MOUNTED IN A WAY AS TO NOT TO INTERFERE WITH HOIST SYSTEM.

KEYED NOTES

1. FAN/LIGHTS CONTROL PANEL. SEE FAN/LIGHTS CONTROL PANEL SCHEMATIC FOR FURTHER INFORMATION.
2. 120V CAPACITIVE PROXIMITY SENSOR MOUNTED AT ROOM DOOR SEE SPECIFICATIONS 16902.
3. POWER PANEL 1 (PP-1) 480Y/277 VAC, 3 PHASE 4 WIRE, SEE SCHEDULE
4. MINI POWER CENTER 2 (MPC-2) 15KVA, 208Y/120VAC, 3 PHASE, 4 WIRE, SEE SCHEDULE.

CMT

License No. 184-000613

CONSULTANTS

MAY 2015

CSO SATELLITE TREATMENT FACILITY CONTRACT NO. 1

OWNER

MATTOON

MATTOON, ILLINOIS: *Working Together to Build the Future*

CITY OF MATTOON

MATTOON, ILLINOIS

MARK	DATE	DESCRIPTION

PROJECT NO:	12078-03-00
CAD DWG FILE:	120780300-E-161.DWG
DESIGNED BY:	LDW
DRAWN BY:	DLB
CHECKED BY:	DW
APPROVED BY:	TFK

COPYRIGHT: CRAWFORD, MURPHY & TILLY, INC. 2015

SHEET TITLE

CHEMICAL FEED BUILDING LIGHTING PLAN

E-161

SHEET 114 OF 128

Path: J:\Mattoon\12078-03\Draw\Sheets\1-CSO Satellite Treatment\120780300-E-161.dwg
Date: Wednesday, June 17, 2015 12:07:02 PM

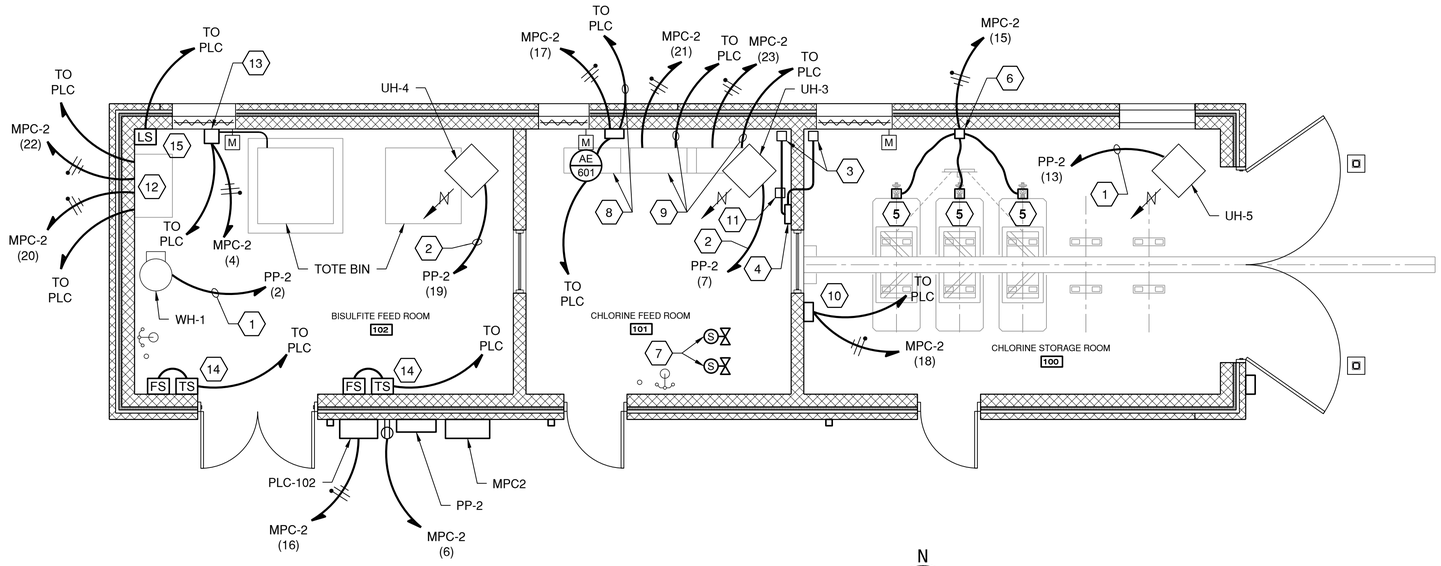

C1 CHEMICAL FEED BUILDING - POWER PLAN VIEW

1/4"=1'-0"

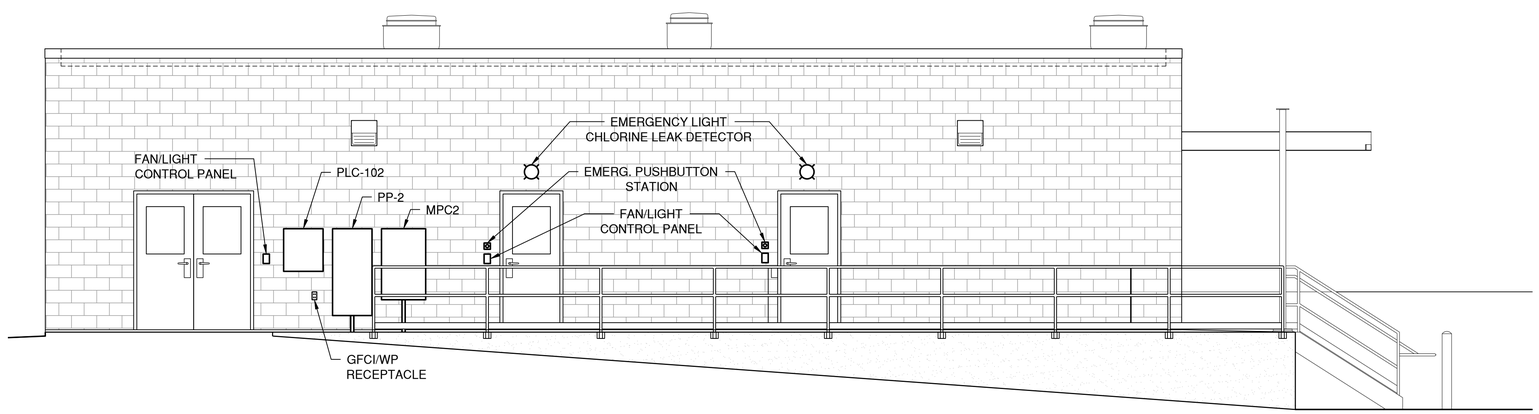

C1 CHEMICAL FEED BUILDING - ELEVATION

1/4"=1'-0"

GENERAL NOTES

1. THE INTERIOR OF THE BISULFATE ROOM 102, CHLORINE FEED ROOM 101 DAN CHLORINE STORAGE ROOM 100 IS A CORROSIVE ENVIRONMENT. THEREFOR ALL ABOVE GRADE CONDUIT IN THIS AREA SHALL BE SCHEDULE 40 PVC OR PVC COATED LIQUID TIGHT FLEXIBLE METAL CONDUIT.
2. PP-1 SHALL BE INSTALLED IN A NEMA 4X ENCLOSURE.
3. FOR CLARITY NOT ALL THE POWER AND CONTROL CONDUIT RUNS ARE SHOWN WITH EACH DEVICE. REFER TO KEYED NOTES FOR ADDITIONAL WIRING.
4. ALTHOUGH SHOWN AS INDIVIDUAL HOME RUNS CONTROL WIRING MAY BE COMBINED TOGETHER IN CONDUITS. SIZED PER NEC. 120VAC POWER MAY BE COMBINED TOGETHER IN CONDUITS.

KEYED NOTES

1. 3 #10 THWN, 1 #10 GND TO PP-2
2. 3 #12 THWN, 1 #12 GND TO PP-2
3. CHLORINE SENSOR ELEMENT MOUNTED 12" A.F.F.
4. CHLORINE SENSOR CONTROL PANEL. PROVIDE 2 #12 THWN (120VAC), 1 #12 GND IN C AND 2 #12 THWN(ALARM), 1 #12 GND IN C TO PLC. ALSO PROVIDE CIRCUITS TO EMERGENCY LIGHTS EXTERIOR OF BLDG.
5. VACUUM REGULATOR WITH 120 VAC HEATER. PROVIDE FLEX CONDUIT TO J-BOX.
6. VACUUM HEATER AND EMERGENCY SHUT OFF PANEL. PROVIDE 2 #12 THWN IN 3/4" C TO EMERGENCY PUSH BUTTON STATIONS AT EXTERIOR DOORS
7. PLANT WATER CONTROL VALVES. PROVIDE 120VAC WITH ISOLATION RELAY AND CONTROL FROM PLC.
8. CHLORINE ANALYZER AND WALL MOUNTED SAMPLE PUMP. PROVIDE 2/C #16 TSP (CHLORINE RESIDUAL), 2-2/C #16 TSP AND 6 #14 THWN (PUMP CONTROL) TO PLC.
9. TWO CHLORINATORS EACH WITH SEPARATE 120VAC AND THEN PROVIDE EACH WITH 2/C #16 TSP (CHLORINATION RATE) TO PLC.
10. CHLORINE CYLINDER WEIGHT TRANSDUCER. PROVIDE 3-2/C #16 TSP TO PLC.
11. VACUUM SWITCH. PROVIDE 120VAC POWER AND 2 #12 THWN (LOW VACUUM), 2 12 THWN (HIGH VACUUM), 1 #12 GND TO PLC.
12. TWO CHEMICAL FEED PUMPS EACH WITH INDIVIDUAL 120VAC POWER AND EACH WITH 2-2/C #16 TSP AND 6 #14 THWN (PUMP CONTROL) TO PLC.
13. TOTE WEIGHT TRANSMITTER WITH 120VAC POWER AND 2/C #16 TSP IN CONDUIT TO PLC.
14. FLOW SWITCH AND TAMPER SWITCHES IN FIRE SPRINKLER PIPING. PROVIDE 2 #12 THWN FOR EACH SWITCH AND INCLUDE 1 #12GND FOR EACH CONDUIT. SIGNALS MAY BE COMBINED IN SAME CONDUIT.
15. LEVEL SWITCH, GEMS MODEL LS-270 OR EQUAL MOUNTED 1/2 " ABOVE FLOOR CONTAINMENT ABOUT 6' BELOW GRATING. FURNISH A "C" CONDUIT BODY AND CORD GRIP OR FS JUNCTION BOX AND CORD GRIP 12" ABOVE SWITCH. PROVIDE 2 #12 THWN, 1 #12 GND IN 3/4 " CONDUIT TO PLC

CMT

License No. 184-000613

CONSULTANTS

MAY 2015

CSO SATELLITE TREATMENT FACILITY CONTRACT NO. 1

OWNER

MATTOON

MATTOON, ILLINOIS: *Working Together to Build the Future*

CITY OF MATTOON

MATTOON, ILLINOIS

MARK	DATE	DESCRIPTION

PROJECT NO:	12078-03-00
CAD DWG FILE:	120780300-E-162.DWG
DESIGNED BY:	LDW
DRAWN BY:	DLB
CHECKED BY:	DW
APPROVED BY:	

COPYRIGHT: CRAWFORD, MURPHY & TILLY, INC. 2015

SHEET TITLE

CHEMICAL FEED BUILDING POWER PLAN

E-162

SHEET 115 OF 128

Path: J:\Mattoon\12078-03\Draw\Sheets\1-CSO Satellite Treatment\120780300-E-162.dwg
Date: Wednesday, June 17, 2015 12:07:18 PM

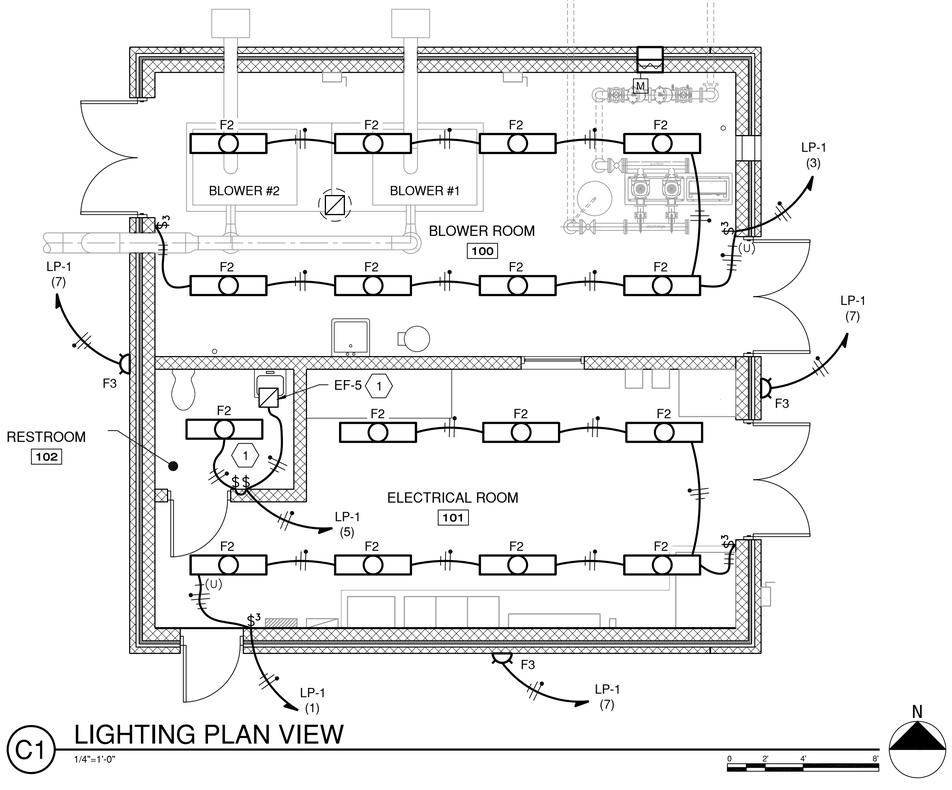

C1 LIGHTING PLAN VIEW

1/4"=1'-0"

NOMENCLATURE

1. CONDUIT SHALL BE EMBEDDED IN THE WALLS FOR REST ROOM 102 AND FROM THE RESTROOM WALL TO THE WINDOW FOR THE COUNTER AREA.

GENERAL NOTES

1. LIGHT FIXTURE SHALL BE PLACED IN A MANNER AS TO OPTIMIZE THE LIGHT OUTPUT.

CMT

License No. 184-000613

CONSULTANTS

MAY 2015

CSO SATELLITE TREATMENT FACILITY CONTRACT NO. 1

OWNER

MATTOON

MATTOON, ILLINOIS: *Working Together to Build the Future*

CITY OF MATTOON

MATTOON, ILLINOIS

MARK	DATE	DESCRIPTION

PROJECT NO:	12078-03-00
CAD DWG FILE:	120780300-E-171.DWG
DESIGNED BY:	LDW
DRAWN BY:	DLB
CHECKED BY:	DJW
APPROVED BY:	TKB

COPYRIGHT: CRAWFORD, MURPHY & TILLY, INC. 2015

SHEET TITLE

BLOWER AND ELECTRICAL BUILDING LIGHTING PLAN

E-171

SHEET 116 OF 128

Path: J:\Mattoon\12078-03\Draw\Sheets\1-CSO Satellite Treatment\120780300-E-171.dwg
Date: Wednesday, June 17, 2015 12:07:30 PM

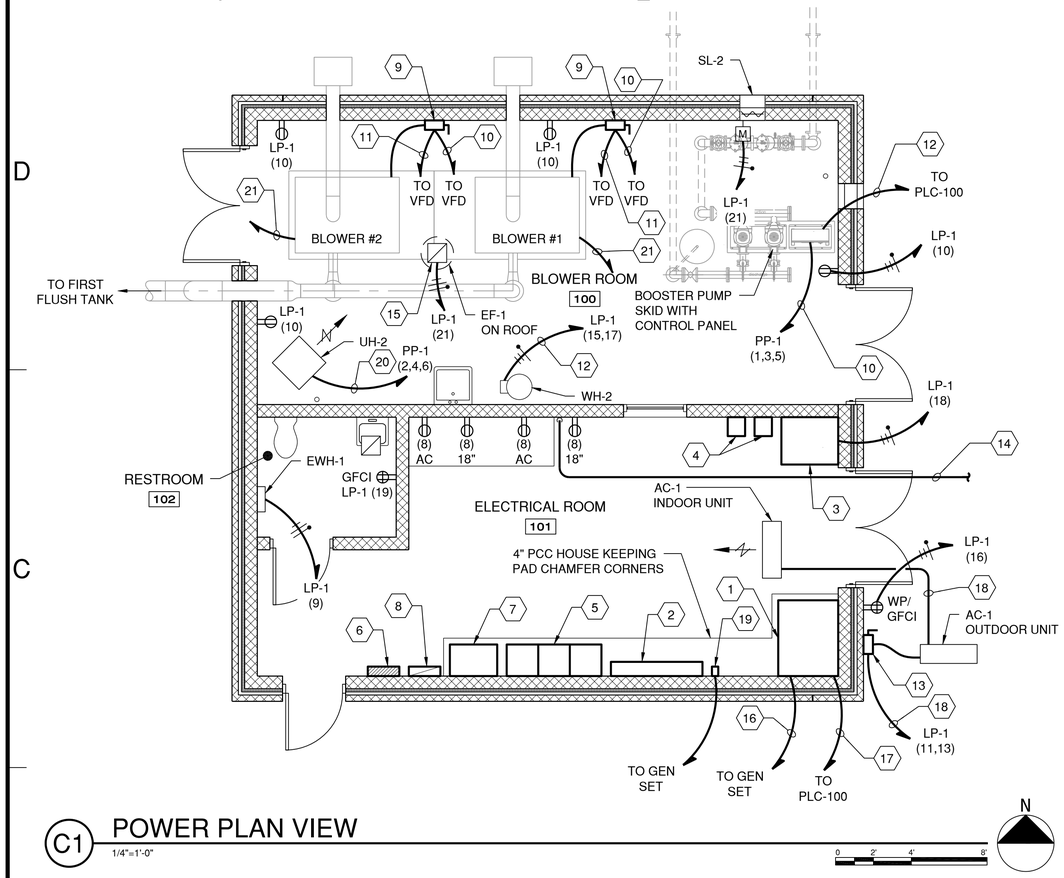

C1 POWER PLAN VIEW

1/4"=1'-0"

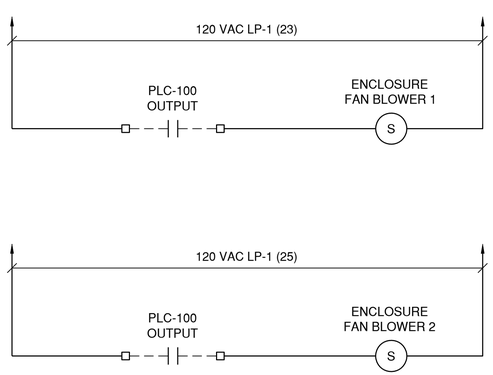

A1 BLOWER FAN SCHEMATIC

N.T.S.

NOMENCLATURE

1. 1200 AMP, 600 VAC, 3 PHASE SERVICE ENTRANCE RATED AUTOMATIC TRANSFER SWITCH (ATS).
2. 1200 AMP, 480Y/277 VAC, 3 PHASE, 4 WIRE, MAIN DISTRIBUTION PANEL (MDS) SEE ELEVATION FOR FURTHER INFORMATION
3. PROGRAMMABLE LOGIC CONTROLLER WITH TOUCHSCREEN (PLC-100)
4. VARIABLE FREQUENCY DRIVE (VFD) 480VAC RATED 75 HP.
5. MOTOR CONTROL CENTER (MCC). SEE ELEVATION FOR FURTHER INFORMATION.
6. 250AMP, 480Y/277 VAC, 3 PHASE, 4 WIRE POWER PANEL 1 (PP-1) SEE PANELBOARD SCHEDULE FOR FURTHER INFORMATION.
7. 75 KVA TRANSFORMER, 480VAC PRIMARY, 208Y/120 VAC, 3 PHASE SECONDARY.
8. 225AMP, 208Y/120 VAC, 3 PHASE, 4 WIRE, 42 POLE, LIGHTING PANELBOARD (LP-1)
9. 200 AMP, 600 VAC, 3 POLE, NON-FUSED HEAVY DUTY SAFETY SWITCH IN NEMA 4X ENCLOSURE.
10. 3-#1/0 THWN, 1-#6 GND IN 1-1/2" C.
11. 2 #12 THWN (THERMAL), 1 #12 GND IN 3/4" C.
12. 2 #12 THWN (ALARM), 1 #12 GND IN 3/4" C.
13. 30AMP, 2 POLE, NON-FUSED, HEAVY DUTY SAFETY SWITCH IN NEMA 4X ENCLOSURE.
14. 2" CONDUIT FOR INTERNET SERVICE TO THE BUILDING.
15. EXHAUST FAN EF-1 IS INTERLOCKED WITH 120 VAC CIRCUIT TO STATIONARY LOUVER SL-2 AND IS THERMOSTAT CONTROLLED.
16. 2 #12 THWN (GEN START), 2 #12 THWN (SPARE), 1 #12 GND. IN 1"C.
17. 2 #12 THWN (ATS IN NORMAL POWER) 2 #12 THWN (ATS IN EMERG. POWER) 1 #12 GND. IN 3/4"C.
18. 2 #10 THWN (208 VAC), 1 #10 GND. IN 3/4"C.
19. GENERATAOR REMOTE ANNUNCIATOR AND MANUFACTURERS CABLE IN 1"C.
20. 3 #10 THWN, 1 #10 GND. IN 3/4"C.
21. 120 VAC CONTROL WIRING IN 3/4"C. TO PLC AND TO LP-1 TO CONTROL RESPECTIVE BLOWER ENCLOSURE FAN.

GENERAL NOTES

1. CONDUIT SHALL BE EMBEDDED IN THE WALLS FOR REST ROOM 102 AND FROM RESTROOM WALL TO WINDOW FOR COUNTER AREA.
2. "AC" BY RECEPTACLE INDICATES ABOVE COUNTER.
3. SEE ELECTRICAL ONE-LINE DIAGRAM FOR ADDITIONAL CONDUIT AND WIRING.
4. ALL RECEPTACLE WIRING SHALL BE 2 #12 THWN, 1 #12 GND. IN ¾"C.

CMT

License No. 184-000613

CONSULTANTS

MAY 2015

CSO SATELLITE TREATMENT FACILITY CONTRACT NO. 1

OWNER

MATTOON

MATTOON, ILLINOIS: *Working Together to Build the Future*

CITY OF MATTOON

MATTOON, ILLINOIS

MARK	DATE	DESCRIPTION

PROJECT NO:	12078-03-00
CAD DWG FILE:	120780300-E-172.DWG
DESIGNED BY:	LDW
DRAWN BY:	DLB
CHECKED BY:	DJW
APPROVED BY:	TEB

COPYRIGHT: CRAWFORD, MURPHY & TILLY, INC. 2015

SHEET TITLE

BLOWER AND ELECTRICAL BUILDING POWER PLAN

E-172

Path: J:\Mattoon\12078-03\Draw\Sheets\1-CSO Satellite Treatment\120780300-E-172.dwg
Date: Wednesday, June 17, 2015 12:07:42 PM

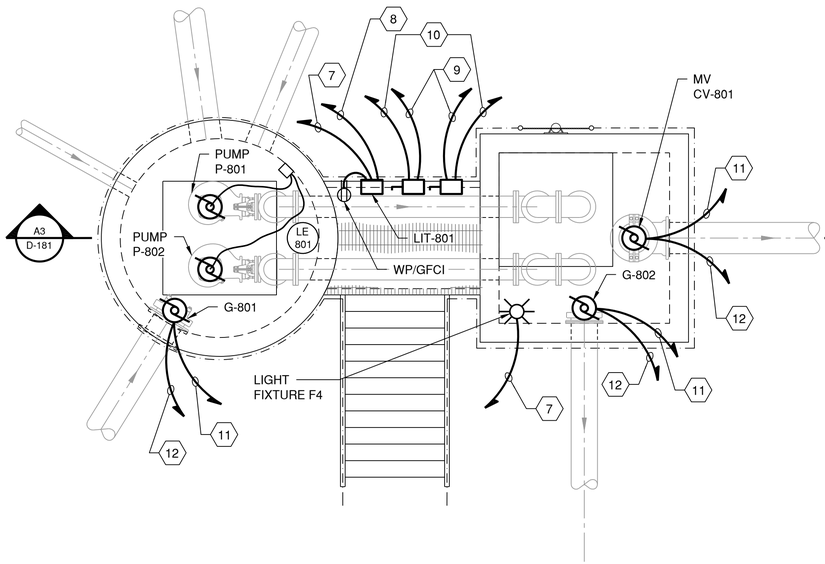

C1 FOUL SEWER-DRAIN PUMP STATION - POWER PLAN

3/8"=1'-0"

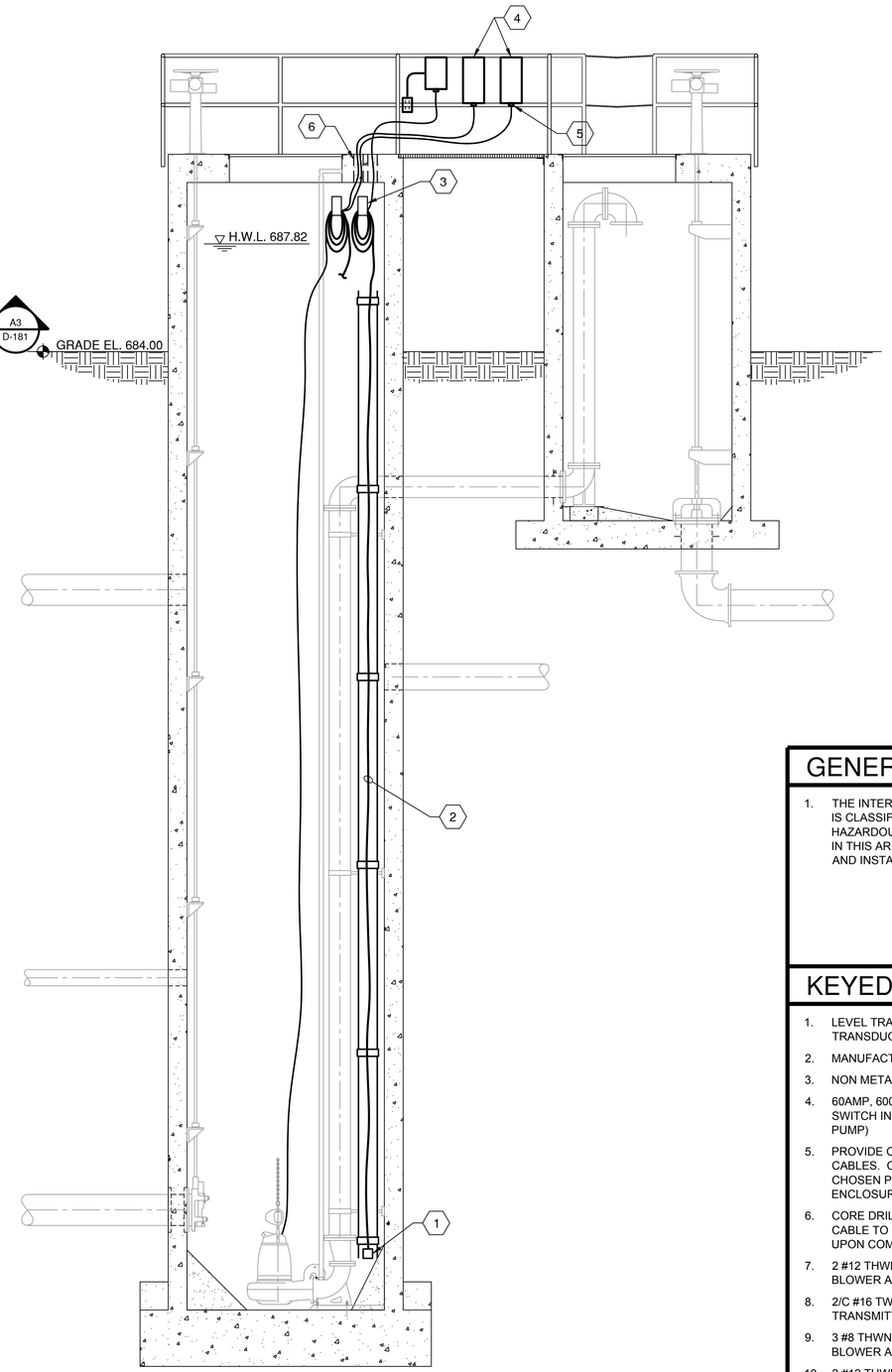

A3 FOUL SEWER-DRAIN PUMP STATION - SECTION

3/8"=1'-0"

GENERAL NOTES

1. THE INTERIOR OF THE FOUL SEWER - DRAIN PUMP STATION IS CLASSIFIED AS CLASS 1 DIVISION 1 GROUP D HAZARDOUS LOCATION. ALL ELECTRICAL INSTALLATIONS IN THIS AREA SHALL BE RATED FOR THIS ENVIRONMENT AND INSTALLED IN ACCORDANCE WITH THE NEC.

KEYED NOTES

1. LEVEL TRANSDUCER. SEE SUBMERSIBLE LEVEL TRANSDUCER DETAIL FOR FURTHER INFORMATION.
2. MANUFACTURERS CABLE TYPICAL.
3. NON METALLIC SADDLE TYPE CABLE RACK TYPICAL
4. 60AMP, 600 VAC, 3 POLE, NON-FUSED, HEAVY DUTY SAFETY SWITCH IN NEMA 4X ENCLOSURE (TYPICAL FOR EACH PUMP)
5. PROVIDE CABLE GLAND FOR PUMP POWER AND CONTROL CABLES. COORDINATE CABLE GLAND SIZING WITH CHOSEN PUMP MANUFACTURE TO MAINTAIN THE ENCLOSURES NEMA 4X RATING (TYPICAL FOR EACH PUMP).
6. CORE DRILL TOP OF SLAB TO ALLOW MANUFACTURERS CABLE TO EXIT THE WET WELL. VAPOR SEAL OPENING UPON COMPLETION OF STARTUP AND TESTING.
7. 2 #12 THWN (120VAC), 1 #12 GND IN 1" CONDUIT TO LP-1 AT BLOWER AND ELECTRICAL BUILDING.
8. 2/C #16 TWISTED SHIELDED PAIR FROM LEVEL TRANSMITTER TO PLC-100.
9. 3 #8 THWN (480VAC), 1 #8 GND IN 1" CONDUIT TO MCC-1 IN BLOWER AND ELECTRICAL BUILDING.
10. 2 #12 THWN (SEAL LEAK AND OVERTEMP), 1 #12 GND IN 1" CONDUIT TO MCC-1.
11. 2 #10 THWN (208VAC POWER), 1 #10 GND IN 1" CONDUIT TO LP-1 AT ELECTRICAL BLDG.
12. 2 #12 THWN (VALVE ENABLE), 2 #12 THWN (VALVE OPEN), 2 #12 THWN (VALVE CLOSE), 2 #12 THWN (VALVE OPENED), 2 #12 THWN (VALVE CLOSED) 2 #10 THWN (ALARM), 1 #12 GND IN 1-1/2" CONDUIT TO PLC-100.

CMT

License No. 184-000613

CONSULTANTS

MAY 2015

CSO SATELLITE
TREATMENT FACILITY
CONTRACT NO. 1

OWNER

MATTOON

MATTOON, ILLINOIS: *Working Together to Build the Future*

CITY OF MATTOON

MATTOON, ILLINOIS

MARK	DATE	DESCRIPTION

PROJECT NO:	12078-03-00
CAD DWG FILE:	120780300-E-181.DWG
DESIGNED BY:	LDW
DRAWN BY:	DLB
CHECKED BY:	DJW
APPROVED BY:	TJK

COPYRIGHT: CRAWFORD, MURPHY & TILLY, INC. 2015

SHEET TITLE

FOUL SEWER-DRAIN PUMP STATION POWER PLAN

E-181

SHEET 118 OF 128

Path: J:\Mattoon\12078-03\Draw\Sheets\1-CSO Satellite Treatment\120780300-E-181.dwg
Date: Wednesday, June 17, 2015 12:07:56 PM

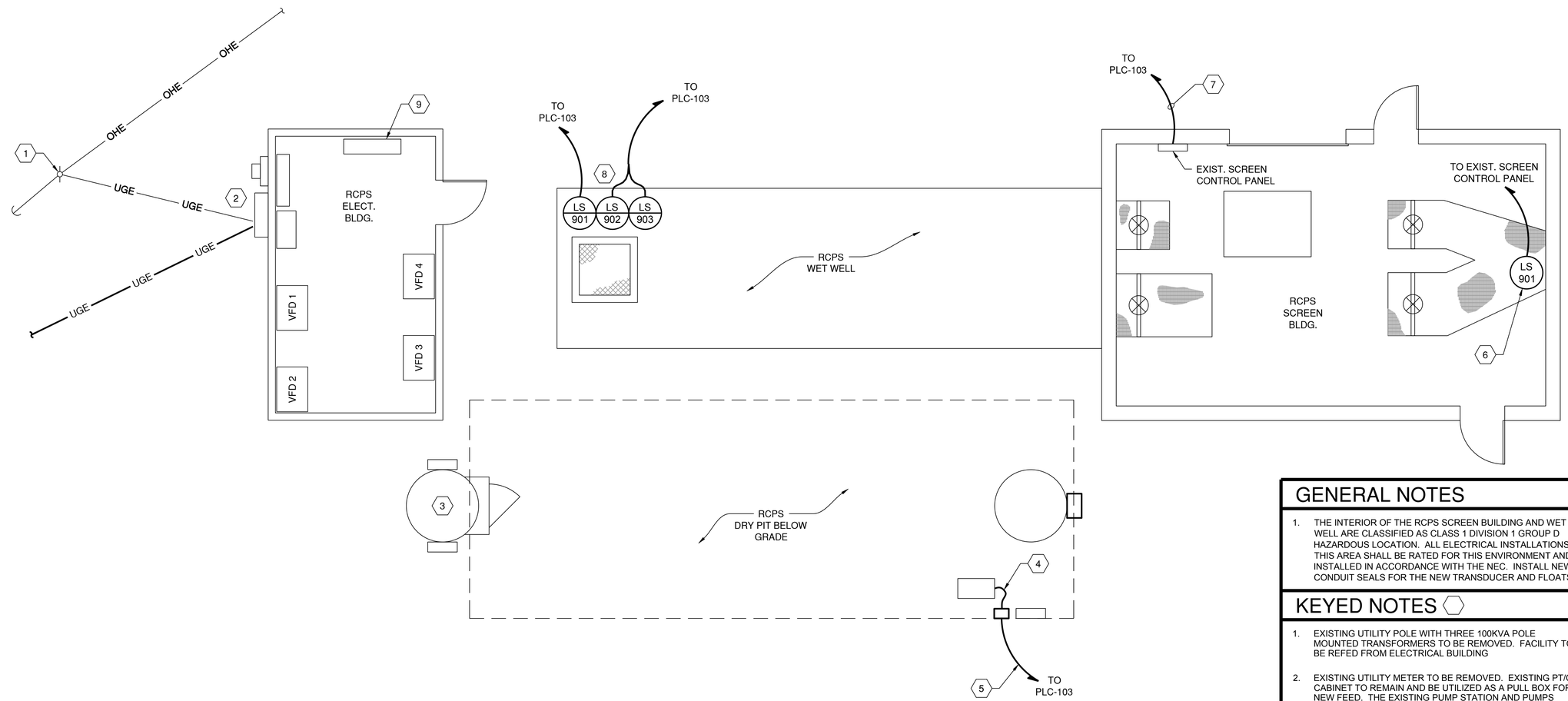

B1 RILEY CREEK PUMP STATION AND SCREENINGS

1/4"=1'-0"

N

0 2' 4' 8'

GENERAL NOTES

1. THE INTERIOR OF THE RCPS SCREEN BUILDING AND WET WELL ARE CLASSIFIED AS CLASS 1 DIVISION 1 GROUP D HAZARDOUS LOCATION. ALL ELECTRICAL INSTALLATIONS IN THIS AREA SHALL BE RATED FOR THIS ENVIRONMENT AND INSTALLED IN ACCORDANCE WITH THE NEC. INSTALL NEW CONDUIT SEALS FOR THE NEW TRANSDUCER AND FLOATS.

KEYED NOTES

1. EXISTING UTILITY POLE WITH THREE 100KVA POLE MOUNTED TRANSFORMERS TO BE REMOVED. FACILITY TO BE REFED FROM ELECTRICAL BUILDING
2. EXISTING UTILITY METER TO BE REMOVED. EXISTING PT/CT CABINET TO REMAIN AND BE UTILIZED AS A PULL BOX FOR NEW FEED. THE EXISTING PUMP STATION AND PUMPS SHALL REMAIN OPERATIONAL DURING CONSTRUCTION. COORDINATE CUTOVER FROM EXISTING SERVICE TO NEW FEED WITH OWNER AND AMEREN.
3. EXISTING MANWAY ELEVATOR FOR ACCESS TO DRY PIT.
4. EXISTING 16 INCH FLOW METER ON PIPE ABOUT 10' ABOVE FINISHED FLOOR. METER CURRENTLY PROVIDES 4-20MA SIGNAL TO FISCHER AND PORTER CIRCLE CHART RECORDER MOUNTED ON WALL ABOUT 5' ABOVE FLOOR. CONTRACTOR SHALL INTERCEPT SIGNAL CONDUCTORS, PROVIDE A 4-20MA SPLITTER (SINGLE INPUT/DUEL OUTPUT ACROMAG 653T OR EQUAL IN SUITABLY SIZED NEMA 4X ENCLOSURE MOUNTED NEXT TO RECORDER AND THEN RE-FEED RECORDER.
5. 2/C #16 SHIELDED TWISTED PAIR IN 1" CONDUIT TO PLC-103
6. NEW FLOAT TO REPLACE THE EXISTING FLOAT. NOTE THAT THE CONTRACTOR TO VERIFY LOCATION. THE CONTRACTOR MAY UTILIZE THE EXISTING CONDUIT TO PULL THE FLOAT CABLE BACK TO THE SCREEN CONTROL PANEL.
7. 2 #12THWN (High Level from Float), 2 #12 THWN (SCREEN RUNNING), 2 #12 THWN (SHEAR PIN FAIL), 1 #12 GND IN 3/4" C. IF AVAILABLE THE CONTRACTOR MAY UTILIZE THE EXISTING CONDUIT.
8. NEW PRESSURE TRANSDUCER AND ASSOCIATED NEW STILLING WELL AND TWO NEW FLOATS (HIGH LEVEL AND LOW LEVEL). UPON CONVERTING CONTROL OF THE PUMPING STATION TO THE NEW INSTRUMENTS DEMOLISH THE EXISTING TRANSDUCER AND FLOATS. THE MANUFACTURERS CABLE MAY BE ROUTED IN EXISTING CONDUITS.
9. NEW PLC-103 TO BE INSTALLED IN EXISTING PUMP CONTROL PANEL. RECONNECT THE EXISTING INPUT/OUTPUTS TO NEW PLC. NEW WIRING TO THE PUMP STATION DEVICES WILL NOT BE REQUIRED.

CMT

License No. 184-000613

CONSULTANTS

MAY 2015

CSO SATELLITE
TREATMENT FACILITY
CONTRACT NO. 1

OWNER

MATTOON

MATTOON, ILLINOIS: *Working Together to Build the Future*

CITY OF MATTOON

MATTOON, ILLINOIS

MARK	DATE	DESCRIPTION

PROJECT NO:	12078-03-00
CAD DWG FILE:	120780300-E-191.DWG
DESIGNED BY:	LDW
DRAWN BY:	DLB
CHECKED BY:	DW
APPROVED BY:	TGB

COPYRIGHT: CRAWFORD, MURPHY & TILLY, INC. 2015

SHEET TITLE

EXIST. RILEY CREEK
P.S. & SCREENINGS
ELECTRICAL

E-191

Path: J:\Mattoon\12078-03\Draw\Sheets\1-CSO Satellite Treatment\120780300-E-191.dwg
Date: Wednesday, June 17, 2015 12:08:08 PM

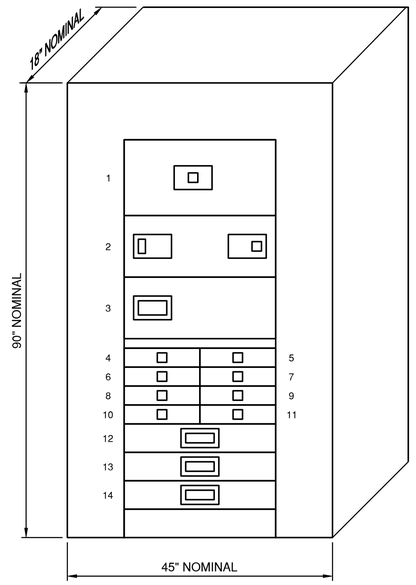

C2 MAIN DISTRIBUTION SWITCHBOARD - ELEVATION
N.T.S.

MAIN DIST. NOMENCLATURE

MDS GENERAL: 480Y/277 VAC, 3 PHASE, 4 WIRE, 1200 AMP BUS, 65K AMP INTERRUPTING RATING IN NEMA 1 ENCLOSURE.

1. MAIN CIRCUIT BREAKER: 1200 AMP, 3 POLE, 100% RATED WITH LSIG ADJUSTABLE TRIP
2. SURGE PROTECTION DEVICE MIN 240kA WITH SURGE COUNTER
3. METER: PANEL METER WITH ASSOCIATED CT/PT'S
4. PROVISIONS FOR FEEDER BREAKER: 225A FRAME
5. PROVISIONS FOR FEEDER BREAKER: 225A FRAME
6. PROVISIONS FOR FEEDER BREAKER: 225A FRAME
7. PROVISIONS FOR FEEDER BREAKER: 225A FRAME
8. 100 AMP, 3 POLE, FEEDER BREAKER: 75K TRANSFORMER
9. 225 AMP, 3 POLE, FEEDER BREAKER: POWER PANEL 2 (PP-2)
10. 150 AMP, 3 POLE, FEEDER BREAKER: BLOWER NO. 1 VFD.
11. 150 AMP, 3 POLE, FEEDER BREAKER: BLOWER NO. 2 VFD
12. 250 AMP, 3 POLE, FEEDER BREAKER: POWER PANEL 1 (PP-1)
13. 600 AMP, 3 POLE, FEEDER BREAKER: RILEY CREEK PUMP STATION.
14. 600 AMP, 3 POLE, FEEDER BREAKER: MCC-1

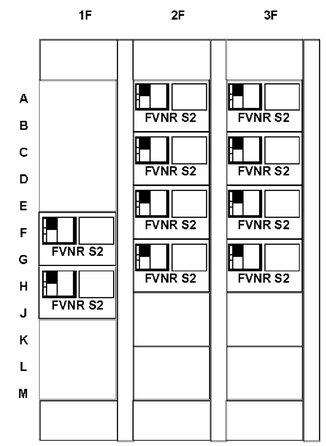

C4 MCC-1 - ELEVATION
N.T.S.

MCC-1 NOMNECLATURE

SECTION 1
1E MAIN LUGS ONLY
1G FVNR SIZE 2 STARTER: FOUL SEWER PUMP NO. 1 15HP
1J FVNR SIZE 2 STARTER: FOUL SEWER PUMP NO. 2 15HP
1M BLANK COVER

SECTION 2
2B FVNR SIZE 2 STARTER: INFLUENT PUMP NO. 1 25HP
2D FVNR SIZE 2 STARTER: INFLUENT PUMP NO. 2 25HP
2F FVNR SIZE 2 STARTER: INFLUENT PUMP NO. 3 25HP
2H FVNR SIZE 2 STARTER: INFLUENT PUMP NO. 4 25HP
2K BLANK COVER
2M BLANK COVER

SECTION 3
3B FVNR SIZE 2 STARTER: MIXER NO. 1 25HP
3D FVNR SIZE 2 STARTER: MIXER NO. 2 25HP
3F FVNR SIZE 2 STARTER: MIXER NO. 3 25HP
3H FVNR SIZE 2 STARTER: MIXER NO. 4 25HP
3K BLANK COVER
3M BLANK COVER

CMT
License No. 184-000613
CONSULTANTS

MAY 2015

CSO SATELLITE TREATMENT FACILITY CONTRACT NO. 1

OWNER

MATTOON
MATTOON, ILLINOIS: *Working Together to Build the Future*

CITY OF MATTOON

MATTOON, ILLINOIS

MARK	DATE	DESCRIPTION

PROJECT NO:	12078-03-00
CAD DWG FILE:	120780300-E-501.DWG
DESIGNED BY:	LDW
DRAWN BY:	DLB
CHECKED BY:	DJW
APPROVED BY:	TKS

COPYRIGHT: CRAWFORD, MURPHY & TILLY, INC. 2015

SHEET TITLE
MAIN DISTRIBUTION PANEL AND MCC-1

E-501
SHEET 120 OF 128

Path: J:\Mattoon\12078-03\Draw\Sheets\1-CSO Satellite Treatment\120780300-E-501.dwg
Date: Wednesday, June 17, 2015 12:08:19 PM

GENERAL NOTES

1. UPON REMOVAL OF THE UTILITY SERVICE REMOVE THE MAIN BONDING JUMPER OR ANY CONNECTION OF THE NEUTRAL AND THE GROUND.

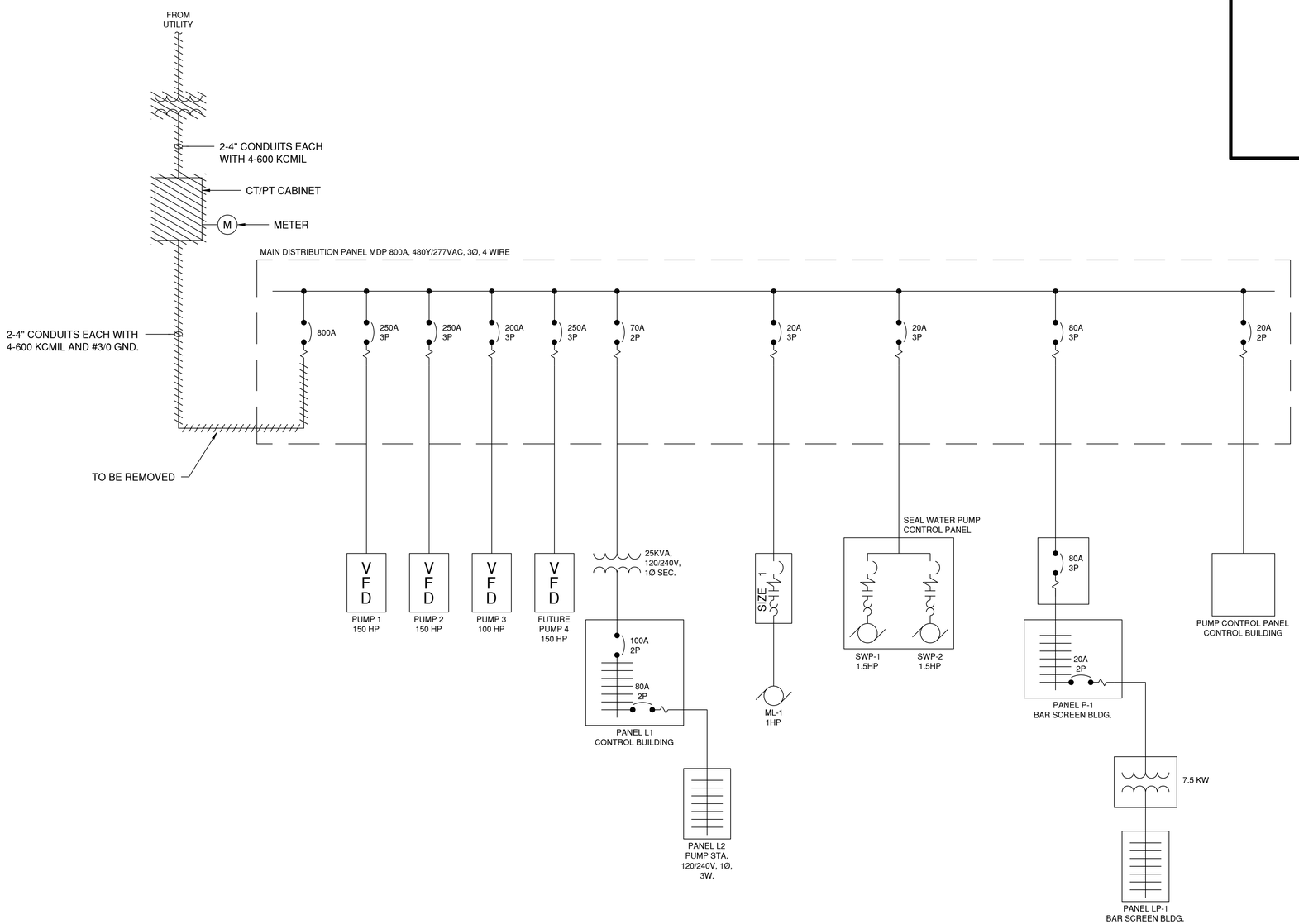

A1 EXISTING ELECTRICAL ONE-LINE DIAGRAM

N.T.S.

CMT

License No. 184-000613

CONSULTANTS

MAY 2015

CSO SATELLITE TREATMENT FACILITY CONTRACT NO. 1

OWNER

MATTOON

MATTOON, ILLINOIS: *Working Together to Build the Future*

CITY OF MATTOON

MATTOON, ILLINOIS

MARK	DATE	DESCRIPTION

PROJECT NO:	12078-03-00
CAD DWG FILE:	120780300-E-601.DWG
DESIGNED BY:	LDW
DRAWN BY:	DLB
CHECKED BY:	LDW
APPROVED BY:	TKB

COPYRIGHT: CRAWFORD, MURPHY & TILLY, INC. 2015

SHEET TITLE

EXISTING ELECTRICAL ONE-LINE DIAGRAM

E-601

Path: J:\Mattoon\12078-03\Draw\Sheets\1-CSO Satellite Treatment\120780300-E-601.dwg
Date: Wednesday, June 17, 2015 12:08:30 PM

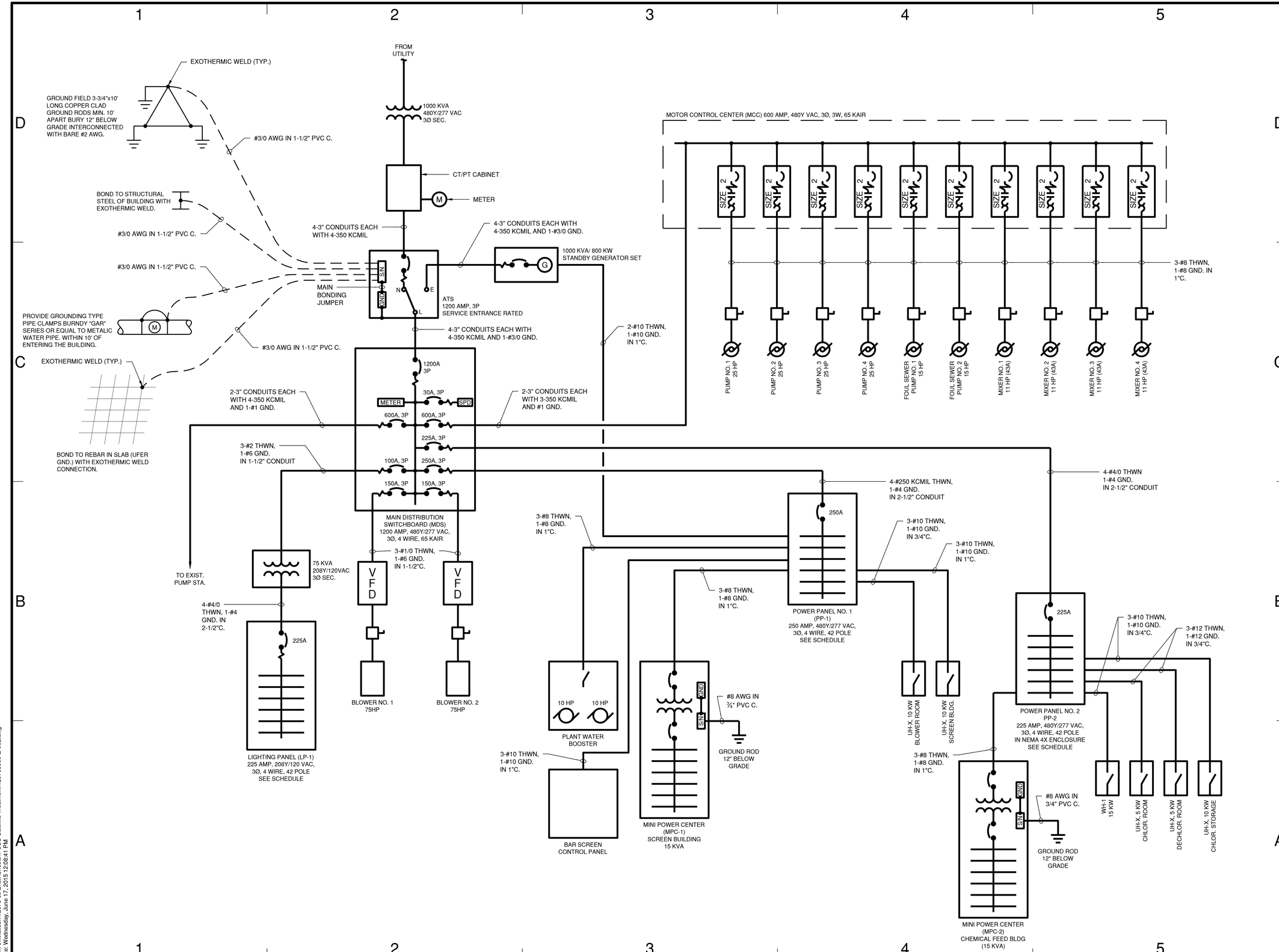

CMT

License No. 184-000613

CONSULTANTS

MAY 2015

CSO SATELLITE TREATMENT FACILITY CONTRACT NO. 1

OWNER

MATTOON

MATTOON, ILLINOIS: *Working Together to Build the Future*

CITY OF MATTOON

MATTOON, ILLINOIS

MARK	DATE	DESCRIPTION

PROJECT NO:	12078-03-00
CAD DWG FILE:	120780300-E-602.DWG
DESIGNED BY:	LDW
DRAWN BY:	DLB
CHECKED BY:	DJW
APPROVED BY:	TJK

COPYRIGHT: CRAWFORD, MURPHY & TILLY, INC. 2015

SHEET TITLE

PROPOSED ELECTRICAL ONE-LINE DIAGRAM

E-602

SHEET 122 OF 128

Path: J:\Mattoon\12078-03\Draw\Sheets\1-CSO Satellite Treatment\120780300-E-602.dwg
Date: Wednesday, June 17, 2015 12:08:41 PM

PANELBOARD SCHEDULE

PANEL DESIGNATION: **MPC-1**
LOCATION: **SCREEN BUILDING**

BOND NEUTRAL AND GROUND BAR: **YES**
NEUTRAL BUS RATING: **100%**
SERVICE ENTRANCE RATED: **NO**

POLE: **24**
SHORT CIRCUIT RATING: **10KA**
SERIES OR FULLY RATED: **FULLY**
TVSS & DISCONNECT REQUIRED: **YES**

VOLTS: **208Y/120V**
PHASE: **3**
WIRE: **4**

MOUNTING: **SURFACE**
ENCL RATING: **NEMA 1**

SIZE: **15KVA**
PROTECTION: **40A PRIMARY, 60A SECONDARY**
MAIN CIRCUIT BREAKER: AMP/POLE **60AMP/3 POLE**

CKT NO.	LOAD	BREAKER SIZE	LOAD AMPS	USAGE FACTOR	PHASE AMPS (USAGE) A	B	C	POLE NO.		PHASE AMPS (USAGE) A	B	C	USAGE FACTOR	LOAD AMPS	BREAKER SIZE	LOAD	CKT NO.
1	INTERIOR LIGHTS	20/1	3.4	1	3.4			1	2	1			1	1	20/1	EXTERIOR RECEPT	2
3	EXTERIOR LIGHTS	20/1	1.5	1		1.5		3	4		0			2	20/2	CV-301	4
5	SUPPLY FAN/LOUVER STARTER	20/1	14	1			14	5	6			0		2	----	----	6
7	GATE G-101	30/3	10	1	10			7	8	0					20/1	SPARE	8
9	----	----	10	1		10		9	10		0				20/1	SPARE	10
11	----	----	10	1			10	11	12			0			20/1	SPARE	12
13	GATE G-102	30/3	14	1	14			13	14	0					20/1	SPARE	14
15	----	----	14	1		14		15	16		0				20/1	SPARE	16
17	----	----	14	1			14	17	18			0			20/1	SPARE	18
19	LIT-101	20/1	1	1	1			19	20	0					20/1	SPARE	20
21	PLC-101	20/1	3	1		3		21	22		0				20/1	SPARE	22
23	SPARE	20/1					0	23	24			0			20/1	SPARE	24
	SECTION TOTAL:				28.4	28.5	38			1	0	0					

	A	B	C
PHASE TOTAL AMPS:	29.4	28.5	38
PHASE TOTAL VA:	3528	3420	4560

MINIMUM MAIN CIRCUIT BREAKER AMPS: 50

TOTAL USAGE LOAD: 11508 VA
MIN. XFMR VA: 14385 VA

NOTES:

PANELBOARD SCHEDULE

PANEL DESIGNATION: **MPC-2**
LOCATION: **CHLORINE BUILDING**

BOND NEUTRAL AND GROUND BAR: **YES**
NEUTRAL BUS RATING: **100%**
SERVICE ENTRANCE RATED: **NO**

POLE: **24**
SHORT CIRCUIT RATING: **10KA**
SERIES OR FULLY RATED: **FULLY**
TVSS & DISCONNECT REQUIRED: **YES**

VOLTS: **208Y/120V**
PHASE: **3**
WIRE: **4**

MOUNTING: **SURFACE**
ENCL RATING: **NEMA 1**

SIZE: **15KVA**
PROTECTION: **40A PRIMARY, 60A SECONDARY**
MAIN CIRCUIT BREAKER: AMP/POLE **60AMP/3 POLE**

CKT NO.	LOAD	BREAKER SIZE	LOAD AMPS	USAGE FACTOR	PHASE AMPS (USAGE) A	B	C	POLE NO.		PHASE AMPS (USAGE) A	B	C	USAGE FACTOR	LOAD AMPS	BREAKER SIZE	LOAD	CKT NO.
1	CHLOR FEED RM LIGHTS	20/1	6	1	6			1	2	2			1	2	20/1	LE-501, LE-502, AE-501	2
3	CHLOR FEED RM FANS	20/1	10	1		10		3	4		1		1	1	20/1	WE-604	4
5	CHLOR STORAGE RM LIGHTS	20/1	8	1			8	5	6			1	1	1	20/1	RECEPTACLE	6
7	CHLOR STORAGE RM FANS	20/1	14	1	14			7	8	0					20/2	CV-501, CV-502, CV-503	8
9	BISULFAFATE RM LIGHTS	20/1	8	1		8		9	10		0				----	----	10
11	BISULFATE ROOM FANS	20/1	14	1			14	11	12			0			20/2	CV-504, CV-505	12
13	EXTERIOR LIGHTS	20/1	3	1	3			13	14	0					----	----	14
15	VACUUM REG HEATER/EMERG SHUT OFF	20/1	6	1		6		15	16		0				20/1	PLC-102	16
17	CHLOR ANALYZER AND SAMPLE PUMP	20/1	2	1			2	17	18			0			20/1	WIT 601, WIT 602 WIT-603	18
19	SPARE	20/1	2	1	2			19	20	0					20/1	BISULFATE PUMP 1	20
21	CHLORINATOR 1	20/1				0		21	22		0				20/1	BISULFATE PUMP 2	22
23	CHLORINATOR 2	20/1					0	23	24			0			20/1	SPARE	24
	SECTION TOTAL:				25	24	24			2	1	1					

	A	B	C
PHASE TOTAL AMPS:	27	25	25
PHASE TOTAL VA:	3240	3000	3000

MINIMUM MAIN CIRCUIT BREAKER AMPS: 40

TOTAL USAGE LOAD: 9240 VA
MIN. XFMR VA: 11550 VA

NOTES:

PANELBOARD SCHEDULE

PANEL DESIGNATION: **LP-1**
LOCATION: **ELECTRICAL BUILDING**

BOND NEUTRAL AND GROUND BAR: **NO**
NEUTRAL BUS RATING: **100%**
SERVICE ENTRANCE RATED: **NO**

POLE: **42**
SHORT CIRCUIT RATING: **10KA**
SERIES OR FULLY RATED: **FULLY**
TVSS & DISCONNECT REQUIRED: **NO**

VOLTS: **208Y/120V**
PHASE: **3**
WIRE: **4**

MOUNTING: **SURFACE**
ENCL RATING: **NEMA 1**

BUS RATING (AMPS): **225**
BUS: **COPPER; SILVER OR TIN PLATED**
MAIN CIRCUIT BREAKER: AMP/POLE **225/3**

CKT NO.	LOAD	BREAKER SIZE	LOAD AMPS	USAGE FACTOR	PHASE AMPS (USAGE) A	B	C	POLE NO.		PHASE AMPS (USAGE) A	B	C	USAGE FACTOR	LOAD AMPS	BREAKER SIZE	LOAD	CKT NO.
1	ELECTRICAL ROOM LIGHTS	20/1	7.2	1	7.2			1	2	1			1	1	20/1	PRESSURE TRANSDUCER (LIT-801)	2
3	BLOWER ROOM LIGHTS	20/1	9	1		9		3	4		1		1	1	20/1	PUMP STA INSTR RECPT LIGHT	4
5	REST ROOM LIGHTS & FAN	20/1	2	0			0	5	6			1	1	1	20/1	FOUL PUMP STA INSTR RECPT LIGHT	6
7	EXTERIOR LIGHTS	20/1	4.5	1	4.5			7	8	6			1	6	20/1	ELECTRICAL ROOM RECEPT	8
9	REST ROOM WALL HEATER EWH-1	20/1	13	1		13		9	10		6		1	6	20/1	BLOWER ROOM RECEPT	10
11	AIR CONDITIONER AC-1	30/2	12	1			12	11	12			0	0	5	20/2	CV-801, G-801	12
13	----	----	12	1	12			13	14	0			0	5	----	----	14
15	WATER HEATER WH-2	20/2	9	1		9		15	16		0		0	1.5	20/1	EXTERIOR RECEPTACLE	16
17	----	----	9	1			9	17	18			3	1	3	20/1	PLC-100	18
19	RESTROOM RECEPT	20/1	1	0	0			19	20	0					20/1	SPARE	20
21	EF-1 AND SL-2	20/1	3	1		3		21	22		0				20/1	SPARE	22
23	FAN BLOWER 1	20/1	1	1			1	23	24			0			20/1	SPARE	24
25	FAN BLOWER 2	20/1	1	1	1			25	26	0					20/1	SPARE	26
27	SPARE	20/1				0		27	28		0				20/1	SPARE	28
29	SPARE	20/1					0	29	30			0			20/1	SPARE	30
31	SPARE	20/1			0			31	32	0					20/1	SPARE	32
33	SPARE	20/1				0		33	34		0				20/1	SPARE	34
35	SPARE	20/1					0	35	36			0			20/1	SPARE	36
37	SPARE	20/1			0			37	38	0					20/1	SPARE	38
39	SPARE	20/1				0		39	40		0				20/1	SPARE	40
41	SPARE	20/1					0	41	42			0			20/1	SPARE	42
	SECTION TOTAL:				24.7	34	22			7	7	4					

	A	B	C
PHASE TOTAL AMPS:	31.7	41	26
PHASE TOTAL VA:	3804	4920	3120

MINIMUM MAIN CIRCUIT BREAKER AMPS: 51

TOTAL USAGE LOAD: 11844 VA
MIN. XFMR VA: 14805 VA

NOTES:

PANELBOARD SCHEDULE

PANEL DESIGNATION: **PP-1**
LOCATION: **ELECTRICAL BUILDING**

BOND NEUTRAL AND GROUND BAR: **NO**
NEUTRAL BUS RATING: **100%**
SERVICE ENTRANCE RATED: **NO**

POLE: **42**
SHORT CIRCUIT RATING: **65KA**
SERIES OR FULLY RATED: **FULLY**
TVSS & DISCONNECT REQUIRED: **NO**

VOLTS: **480Y/277V**
PHASE: **3**
WIRE: **4**

MOUNTING: **SURFACE**
ENCL RATING: **NEMA 1**

BUS RATING (AMPS): **250**
BUS: **COPPER; SILVER OR TIN PLATED**
MAIN CIRCUIT BREAKER: AMP/POLE **MLO**

CKT NO.	LOAD	BREAKER SIZE	LOAD AMPS	USAGE FACTOR	PHASE AMPS (USAGE) A	B	C	POLE NO.		PHASE AMPS (USAGE) A	B	C	USAGE FACTOR	LOAD AMPS	BREAKER SIZE	LOAD	CKT NO.
1	PLANT WATER BOOSTER STA	40/3	21	1	21			1	2	12			1	12	30/3	UNIT HEATER BLOWER RM UH-2: 10KW	2
3	----	----	21	1		21		3	4		12		1	12	----	----	4
5	----	----	21	1			21	5	6			12	1	12	----	----	6
7	MPC-1 SCREEN BLDG	40/3	31	1	31			7	8	12			1	12	30/3	UNIT HEATER SCREEB BLDG UH-1 : 10KW	8
9	----	----	31	1		31		9	10		12		1	12	----	----	10
11	----	----	31	1			31	11	12			12	1	12	----	----	12
13	BAR SCREEN CONTROL PANEL	20/3	5	1	5			13	14	8			1	8	20/2	STANDBY GEN SETHOUSE POWER	14
15	----	----	5	1		5		15	16		8		1	8	----	----	16
17	----	----	5	1			5	17	18			0			30/3	SPARE	18
19	SPARE	40/3			0			19	20	0					----	----	20
21	----	----				0		21	22		0				----	----	22
23	----	----					0	23	24			0				BLANK	24
25	SPARE	20/3			0			25	26	0						BLANK	26
27	----	----				0		27	28		0					BLANK	28
29	----	----					0	29	30			0				BLANK	30
31	BLANK				0			31	32	0						BLANK	32
33	BLANK					0		33	34		0					BLANK	34
35	BLANK						0	35	36			0				BLANK	36
37	BLANK				0			37	38	0						BLANK	38
39	BLANK					0		39	40		0					BLANK	40
41	BLANK						0	41	42			0				BLANK	42
	SECTION TOTAL:				57	57	57			32	32	24					

	A	B	C
PHASE TOTAL AMPS:	89	89	81
PHASE TOTAL VA:	10680	10680	9720

MINIMUM MAIN CIRCUIT BREAKER AMPS: 135

TOTAL USAGE LOAD: 31080 VA
MIN. XFMR VA: 38850 VA

NOTES:

CMT

License No. 184-000613

CONSULTANTS

MAY 2015

CSO SATELLITE TREATMENT FACILITY CONTRACT NO. 1

OWNER

MATTOON
MATTOON, ILLINOIS: *Working Together to Build the Future*

CITY OF MATTOON

MATTOON, ILLINOIS

MARK	DATE	DESCRIPTION

PROJECT NO: 12078-03-00
CAD DWG FILE: 120780300-E-603.DWG
DESIGNED BY: LDW
DRAWN BY: DLB
CHECKED BY: DJW
APPROVED BY: TJK

COPYRIGHT: CRAWFORD, MURPHY & TILLY, INC. 2015

SHEET TITLE

PANEL SCHEDULES

E-603

Path: J:\Mattoon\12078-03\Draw\Sheets\1-CSO Satellite Treatment\120780300-E-603.dwg
Date: Wednesday, June 17, 2015 12:08:54 PM

PANELBOARD SCHEDULE

PANEL DESIGNATION: **PP-2**
LOCATION: **CHLORINE BUILDING**

BOND NEUTRAL AND GROUND BAR: **NO**
NEUTRAL BUS RATING: **100%**
SERVICE ENTRANCE RATED: **NO**

POLE: **30**
SHORT CIRCUIT RATING: **65KA**
SERIES OR FULLY RATED: **FULLY**
TVSS & DISCONNECT REQUIRED: **YES**

VOLTS: **480Y/277V**
PHASE: **3**
WIRE: **4**

MOUNTING: **SURFACE**
ENCL RATING: **NEMA 1 MOUNTED IN NEMA 4X ENCL**

BUS RATING (AMPS): **225**
BUS: **COPPER; SILVER OR TIN PLATED**
MAIN CIRCUIT BREAKER: AMP/POLE **MCB-225**
SQUARE D NF OR EQUAL

CKT NO.	LOAD	BREAKER SIZE	LOAD AMPS	USAGE FACTOR	PHASE AMPS (USAGE) A	B	C	POLE NO.		PHASE AMPS (USAGE) A	B	C	USAGE FACTOR	LOAD AMPS	BREAKER SIZE	LOAD	CKT NO.
1	MPC-2 CHLOR BLDG 15KW	40/3	18	1	18			1	2	18			1	18	30/3	UNIT WATER HEATER 15KW	2
3	----	----	18	1		18		3	4		18		1	18	----	----	4
5	----	----	18	1			18	5	6			18	1	18	----	----	6
7	CHLOR FEED RM UNIT HEATER UH-3 5KW	20/3	6	1	6			7	8	0					20/1		8
9	----	----	6	1		6		9	10		0				20/1		10
11	----	----	6	1			6	11	12			0			20/1		12
13	CHLOR STOR RM UNIT HEATER UH-5 10KW	30/3	12	1	12			13	14	0					20/1		14
15	----	----	12	1		12		15	16		0				20/1		16
17	----	----	12	1			12	17	18			0			20/1		18
19	BISULFATE ROOM UNIT HEATER UN-4 5KW	20/3	6	1	6			19	20	0					20/1		20
21	----	----	6	1		6		21	22		0				20/1		22
23	----	----	6	1			6	23	24			0			20/1		24
25		20/1			0			25	26	0					20/1		26
27		20/1				0		27	28		0				20/1		28
29		20/1					0	29	30			0			20/1		30
31		20/1			0			31	32	0					20/1		32
33		20/1				0		33	34		0				20/1		34
35		20/1					0	35	36			0			20/1		36
	SECTION TOTAL:				42	42	42			18	18	18					

MINIMUM MAIN CIRCUIT BREAKER AMPS: 94

	A	B	C
PHASE TOTAL AMPS:	60	60	60
PHASE TOTAL VA:	7200	7200	7200

TOTAL USAGE LOAD: 21600 VA
MIN. XFMR VA: 27000 VA

NOTES:

LIGHT FIXTURE SCHEDULE

FIXTURE NO.	MANUFACTURER	FIXTURE MAKE OR MODEL NO.	LAMP	LOCATION & MOUNTING
F1	KILLARK	EML-40-30-S (FLUTED GLOBE AND STANDARD DOME)	40W LED WITH 120VAC	CEILING MOUNTED
F2	DECO DIGITAL	DWH-LED-4-60-40-120	60WATT LED	CEILING MOUNTED
F3	LITHONIA	TWH-20C-1000-5000K-T3M-MVOLT-PER-DNAXD	LED WITH NATURAL ALUMINUM FINISH	WALL MOUNT 10'-0" AFG NOMINAL
F4	LITHONIA	DSX0 LED-20C-700-40K-T3M-MVOLT-RPA-DNAXD WITH POLE RSA-12-5G-DNA BOTH FIXTURE AND POLE NATURAL ALUMINUM IN COLOR	45 WATT LED, 1 ENGINE, 700MA, TYPE 3 DISTR MULTIVOLT DRIVER, TOGGLE SWITCH CONTROL	POLE MOUNTED ON 12 FT POLE WITH VIBRATION DAMPENER, INCLUDE TOGGLE SWITCH IN POLE HANDHOLE

CMT

License No. 184-000613

CONSULTANTS

MAY 2015

CSO SATELLITE TREATMENT FACILITY CONTRACT NO. 1

OWNER

MATTOON
MATTOON, ILLINOIS: *Working Together to Build the Future*

CITY OF MATTOON

MATTOON, ILLINOIS

MARK	DATE	DESCRIPTION

PROJECT NO: 12078-03-00
CAD DWG FILE: 120780300-E-604.DWG
DESIGNED BY: LDW
DRAWN BY: DLB
CHECKED BY: LDW
APPROVED BY: TKA

COPYRIGHT: CRAWFORD, MURPHY & TILLY, INC. 2015

SHEET TITLE

PANEL SCHEDULES

E-604

Path: J:\Mattoon\12078-03\Draw\Sheets\1-CSO Satellite Treatment\120780300-E-604.dwg
Date: Wednesday, June 17, 2015 12:09:03 PM

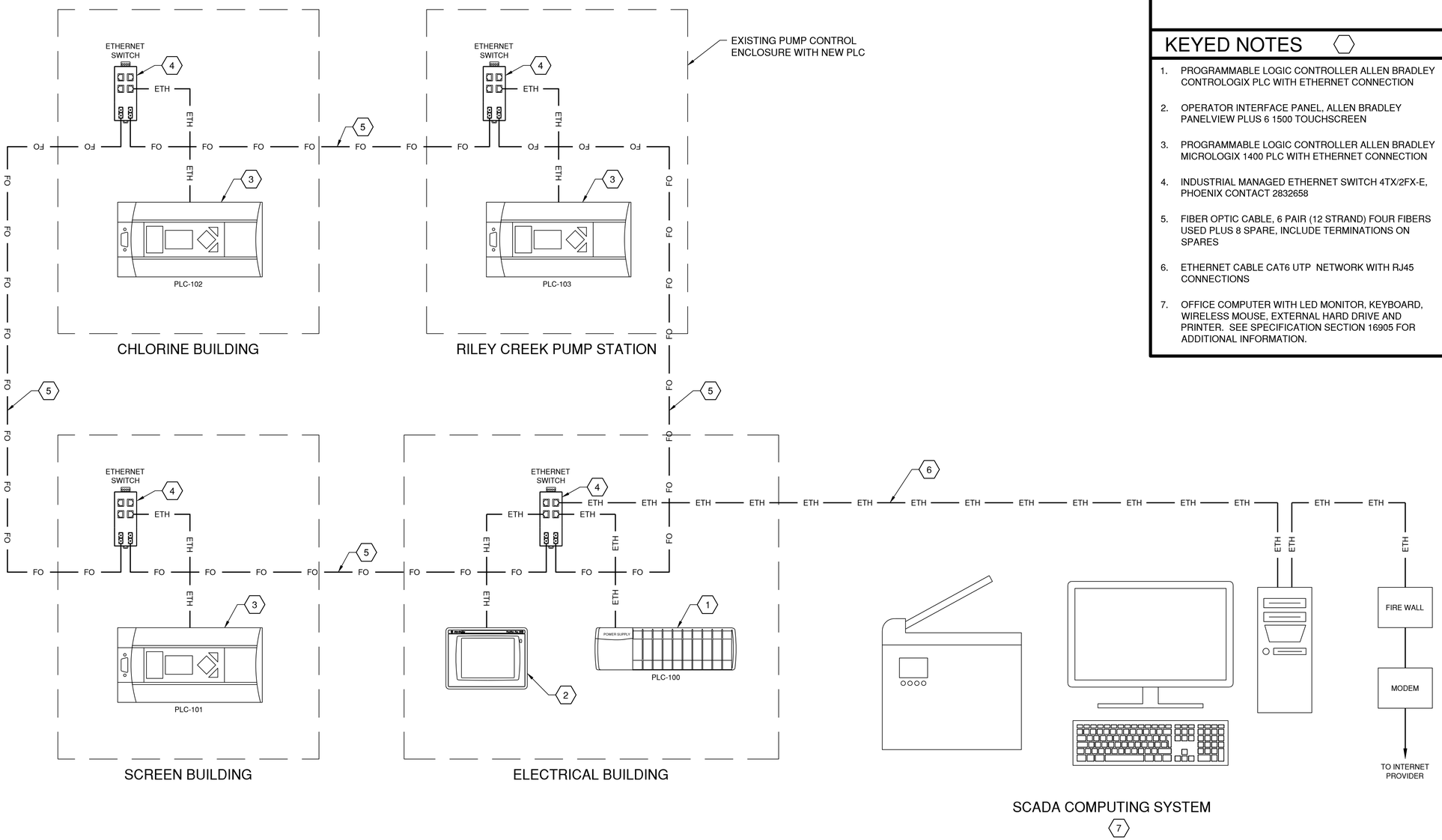

GENERAL NOTES

1. PLC NETWORK ARCHITECTURAL DRAWING IS DIAGRAMMATIC ONLY AND IN NOT INTENDED TO SHOW SPECIFIC TYPE OR QUANTITY OF I/O MODULES, FIBER OPTIC HARDWARE OR UTP ETHERNET NETWORK EQUIPMENT. FURNISH ALL COMPONENTS NECESSARY TO PROVIDE A FULLY FUNCTIONAL SYSTEM AS DESCRIBED HEREIN.

KEYED NOTES

1. PROGRAMMABLE LOGIC CONTROLLER ALLEN BRADLEY CONTROLOGIX PLC WITH ETHERNET CONNECTION
2. OPERATOR INTERFACE PANEL, ALLEN BRADLEY PANELVIEW PLUS 6 1500 TOUCHSCREEN
3. PROGRAMMABLE LOGIC CONTROLLER ALLEN BRADLEY MICROLOGIX 1400 PLC WITH ETHERNET CONNECTION
4. INDUSTRIAL MANAGED ETHERNET SWITCH 4TX/2FX-E, PHOENIX CONTACT 2832658
5. FIBER OPTIC CABLE, 6 PAIR (12 STRAND) FOUR FIBERS USED PLUS 8 SPARE, INCLUDE TERMINATIONS ON SPARES
6. ETHERNET CABLE CAT6 UTP NETWORK WITH RJ45 CONNECTIONS
7. OFFICE COMPUTER WITH LED MONITOR, KEYBOARD, WIRELESS MOUSE, EXTERNAL HARD DRIVE AND PRINTER. SEE SPECIFICATION SECTION 16905 FOR ADDITIONAL INFORMATION.

CMT

License No. 184-000613

CONSULTANTS

MAY 2015

CSO SATELLITE TREATMENT FACILITY CONTRACT NO. 1

OWNER

MATTOON

MATTOON, ILLINOIS: *Working Together to Build the Future*

CITY OF MATTOON

MATTOON, ILLINOIS

MARK	DATE	DESCRIPTION

PROJECT NO:	12078-03-00
CAD DWG FILE:	120780300-E-605.DWG
DESIGNED BY:	LDW
DRAWN BY:	DLB
CHECKED BY:	LDW
APPROVED BY:	TKB

COPYRIGHT: CRAWFORD, MURPHY & TILLY, INC. 2015

SHEET TITLE

PLC NETWORK ARCHITECTURE

E-605

SHEET 125 OF 128

Path: J:\Mattoon\12078-03\Draw\Sheets\1-CSO Satellite Treatment\120780300-E-605.dwg
Date: Wednesday, June 17, 2015 12:09:15 PM

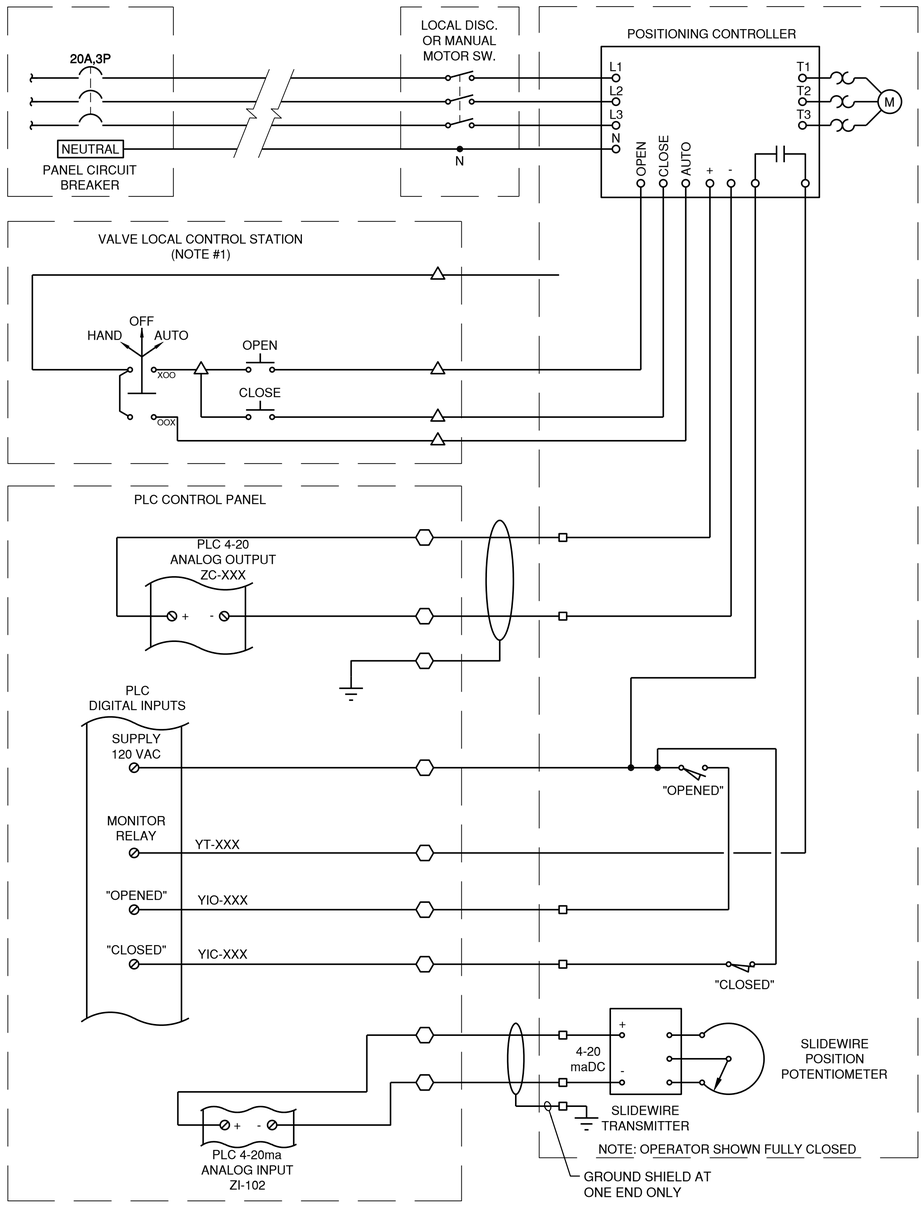

NOTES:

1. OPERATOR LOCAL CONTROL STATION MAY BE INTEGRAL TO OPERATOR HOUSING IF OPERATOR IS ACCESSIBLE AND INSTALLED BELOW 5'-6" A.F.F.
2. SCHEMATIC SHOWN IS INTENDED TO INDICATE FUNCTIONAL CONTROL REQUIREMENTS. CONTRACTOR AND SUPPLIERS SHALL COORDINATE TO PROVIDE ALL EQUIPMENT NECESSARY UTILIZING PROPOSED OPERATORS AND CONTROL SYSTEM FEATURES AS INDICATED.

△ - TERMINAL IN OPERATOR LOCAL CONTROL STATION

□ - TERMINAL IN VALVE OPERATOR

⬡ - TERMINAL IN PLC CONTROL PANEL

A1 GATE AND VALVE CONTROL SCHEMATIC

N.T.S.

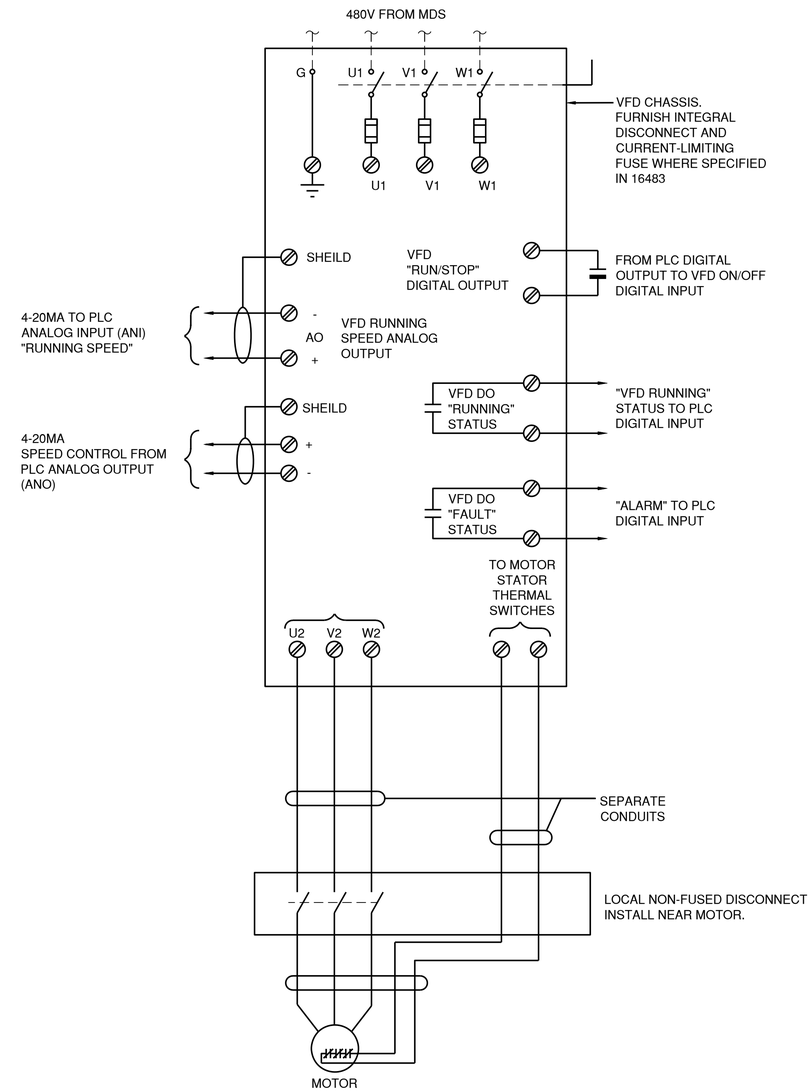

B4 CONTROL SCHEMATIC (VFD) BLOWER NO. 1 AND BLOWER NO. 2

N.T.S.

CMT

License No. 184-000613

CONSULTANTS

MAY 2015

CSO SATELLITE TREATMENT FACILITY CONTRACT NO. 1

OWNER

MATTOON

MATTOON, ILLINOIS: *Working Together to Build the Future*

CITY OF MATTOON

MATTOON, ILLINOIS

MARK	DATE	DESCRIPTION

PROJECT NO:	12078-03-00
CAD DWG FILE:	120780300-E-606.DWG
DESIGNED BY:	LDW
DRAWN BY:	DLB
CHECKED BY:	DW
APPROVED BY:	TJS

COPYRIGHT: CRAWFORD, MURPHY & TILLY, INC. 2015

SHEET TITLE

MISCELLANEOUS SCHEMTAICS - 1

E-606

SHEET 126 OF 128

Path: J:\Mattoon\12078-03\Draw\Sheets\1-CSO Satellite Treatment\120780300-E-606.dwg
Date: Wednesday, June 17, 2015 12:09:26 PM

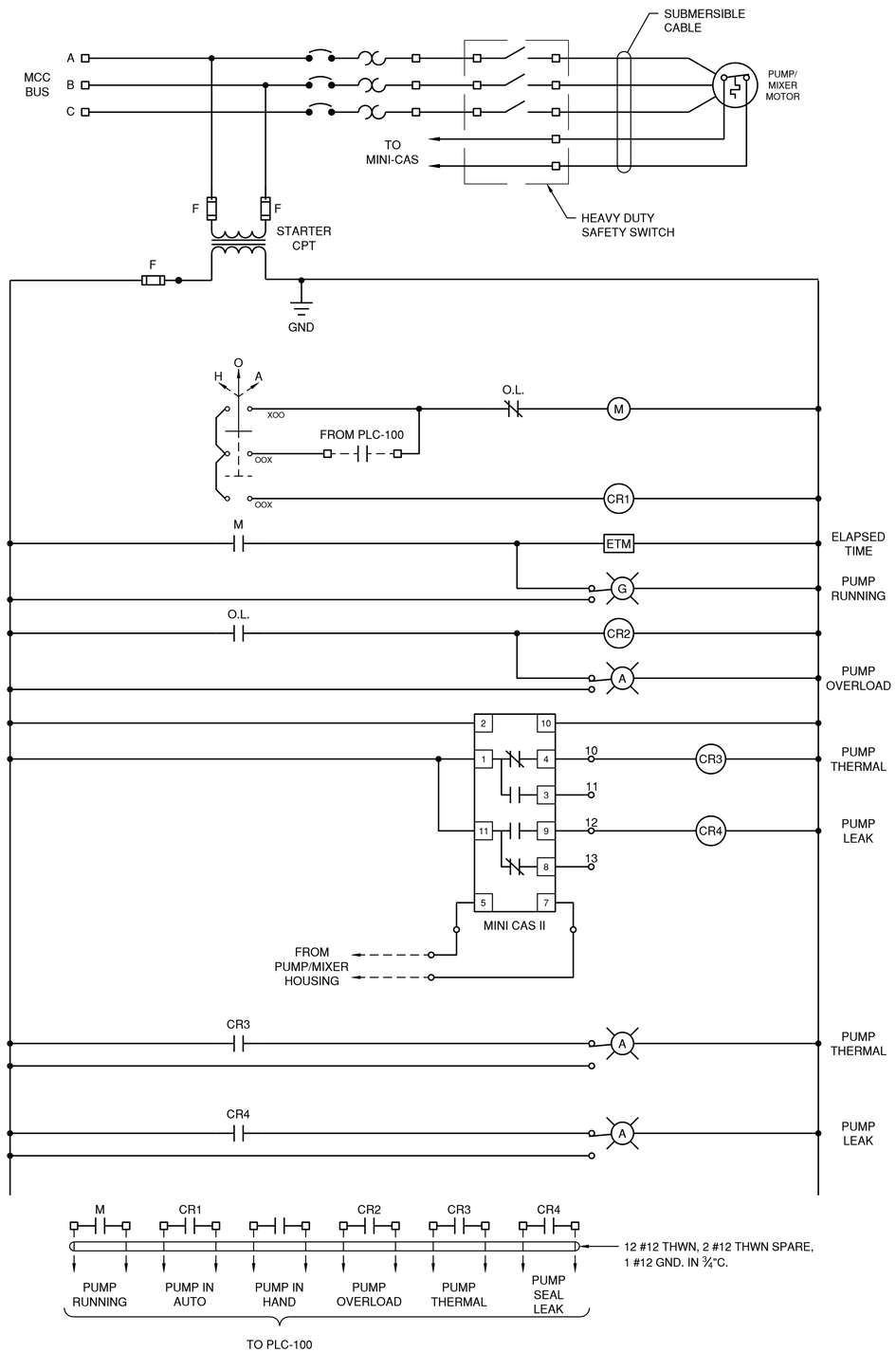

PUMP CONTROL SCHEMATIC - INFLUENT PUMPS (TYPICAL OF 4)
FOUL SEWER PUMPS (TYPICAL OF 2) - MIXERS (TYPICAL OF 4)

A1

N.T.S.

CMT

License No. 184-000613

CONSULTANTS

MAY 2015

CSO SATELLITE TREATMENT FACILITY CONTRACT NO. 1

OWNER

MATTOON

MATTOON, ILLINOIS: *Working Together to Build the Future*

CITY OF MATTOON

MATTOON, ILLINOIS

MARK	DATE	DESCRIPTION

PROJECT NO:	12078-03-00
CAD DWG FILE:	120780300-E-607.DWG
DESIGNED BY:	LDW
DRAWN BY:	DLB
CHECKED BY:	LDW
APPROVED BY:	TEB

COPYRIGHT: CRAWFORD, MURPHY & TILLY, INC. 2015

SHEET TITLE

MISCELLANEOUS SCHEMTAICS - 2

E-607

SHEET 127 OF 128

Path: J:\Mattoon\12078-03\Draw\Sheets\1-CSO Satellite Treatment\120780300-E-607.dwg
Date: Wednesday, June 17, 2015 12:09:37 PM

GENERAL NOTES

1. THE SCHEMATIC IS BASED ON A BAR SCREEN AS MANUFACTURED BY E&I CORPORATION AND IS SHOWN AS A MINIMUM. THE CONTRACTOR SHALL PROVIDE ADDITIONAL POWER AND CONTROL IF REQUIRED BY THE PARTICULAR SCREEN MANUFACTURER TO PROVIDE A COMPLETE AND OPERATIONAL SCREEN SYSTEM. SEE MECHANICAL SPECIFICATIONS FOR ADDITIONAL INFORMATION.

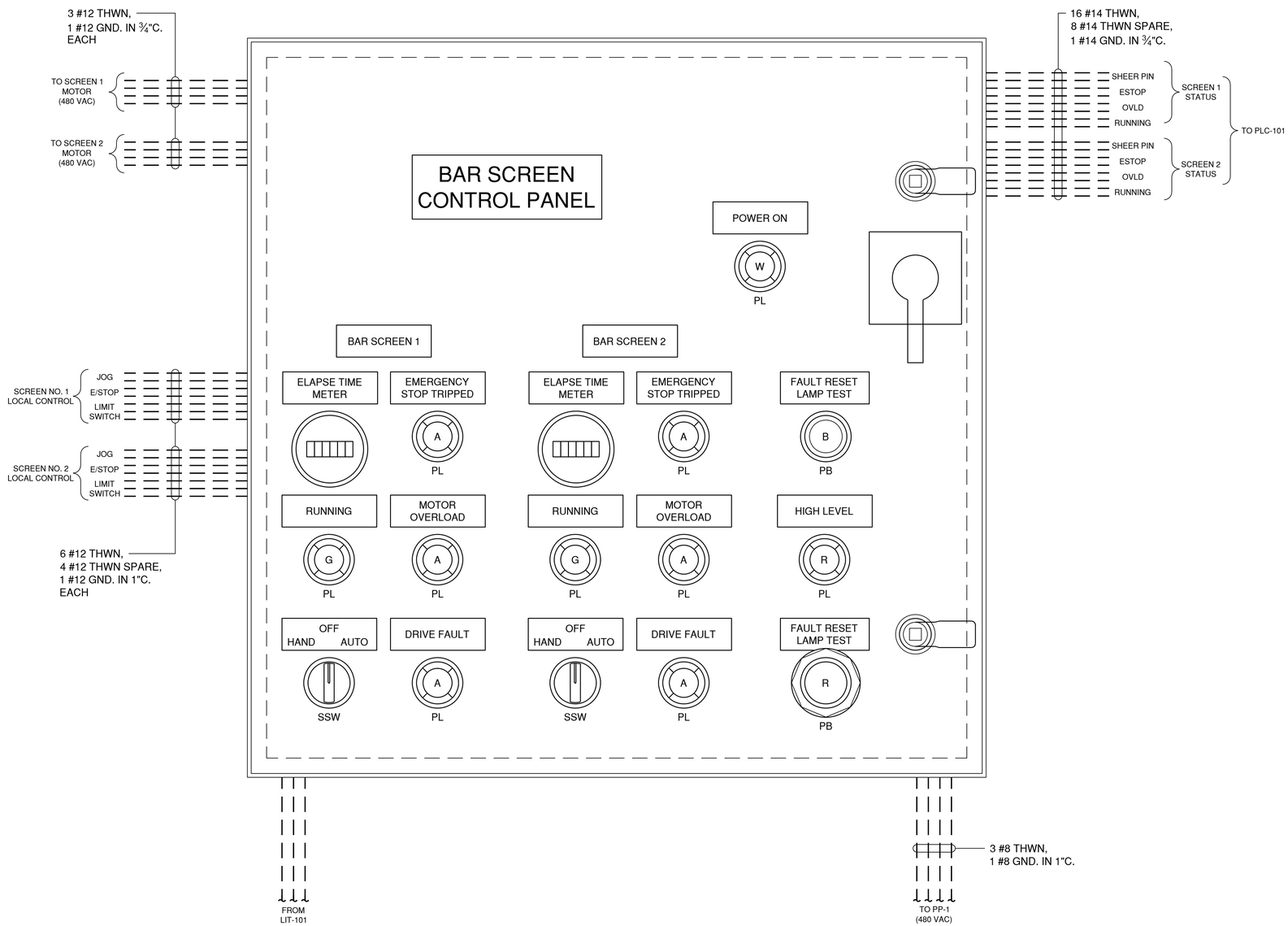

CMT

License No. 184-000613

CONSULTANTS

MAY 2015

CSO SATELLITE TREATMENT FACILITY CONTRACT NO. 1

OWNER

MATTOON

MATTOON, ILLINOIS: *Working Together to Build the Future*

CITY OF MATTOON

MATTOON, ILLINOIS

MARK	DATE	DESCRIPTION

PROJECT NO:	12078-03-00
CAD DWG FILE:	120780300-E-608.DWG
DESIGNED BY:	LDW
DRAWN BY:	DLB
CHECKED BY:	DW
APPROVED BY:	TGB

COPYRIGHT: CRAWFORD, MURPHY & TILLY, INC. 2015

SHEET TITLE

BAR SCREEN CONTROL SCHEMATIC

E-608

SHEET 128 OF 128

Path: J:\Mattoon\12078-03\Draw\Sheets\1-CSO Satellite Treatment\120780300-E-608.dwg
Date: Wednesday, June 17, 2015 12:09:48 PM